This service manuals covers most of the 2007-2010 Can Am Outlander/Renegade Series

Some models may need supplemental manuals which have blue titles. Use the base manual for everything not contained in the supplement if your model or year requires a supplement.

This manual is fully searchable, just hold down the control key and the F key to search on any word.

I do apologize for any confusion the supplements may cause.

This is the way Can-Am originally set up these manuals.

I have attempted to organize and improve them as much as possible.

If you bought this manual from any other seller, they are reselling my work.

Please leave them negative feedback & email me at sales@midwestmanuals.com .

Our goal is to be one of the BEST sellers on eBay and the internet by providing you with the BEST customer service and the BEST manuals on the market.

Thank you for choosing us.



sales@midwestmanuals.com
www.midwestmanuals.com

www.midwestmanuals.com

TABLE OF CONTENTS

SAFETY NOTICE ..... **VIII**

INTRODUCTION ..... **IX**
GENERAL INFORMATION IX
VEHICLE INFORMATION X
ENGINE EMISSIONS INFORMATION X
SELF-LOCKING FASTENERS PROCEDURE XI
LOCTITE® APPLICATION PROCEDURE XI
TIGHTENING TORQUES XIV
MANUAL INFORMATION XVI

01 MAINTENANCE
01 – MAINTENANCE CHART **1**
MAINTENANCE CHART 1
02 – PRESEASON PREPARATION **5**
03 – STORAGE PROCEDURES **7**
FUEL STABILIZER 7
ENGINE LUBRICATION 7
RAGS INSTALLATION 7
COOLANT DENSITY 8
DRIVE AND DRIVEN PULLEYS PROTECTION 8
VEHICLE CLEANING 8
VEHICLE PROTECTION 8
04 – SPECIAL PROCEDURES **9**
TURN OVER 9
ATV IMMERSION 9

02 TROUBLESHOOTING
01 – TROUBLESHOOTING CHART **11**
ELECTRICAL SYSTEM 11
COOLING SYSTEM 12
MAGNETO SYSTEM 13
LUBRICATION 14
CYLINDER AND HEAD 15
CRANKSHAFT 15
GEARBOX 15
COUPLING UNIT 17
CVT 17
ENGINE GENERAL 20

03 ENGINE AND GEARBOX (V490/V660/V810)
01 – ENGINE REMOVAL AND INSTALLATION **25**
GENERAL **26**
PROCEDURES **26**
ENGINE REMOVAL 26
ENGINE INSTALLATION 32
ENGINE MOUNT REPLACEMENT 33
02 – AIR INTAKE SYSTEM **35**
GENERAL **37**
PROCEDURES **37**
AIR FILTER 37
AIR FILTER HOUSING 37
RESTRICTOR 39
03 – EXHAUST SYSTEM **41**
GENERAL 42
PROCEDURES 42

www.midwestmanuals.com
Sales@midwestmanuals.com

www.midwestmanuals.com

TABLE OF CONTENTS

FRONT EXHAUST PIPE 42
MUFFLER 43
"Y" EXHAUST PIPE 43
FUEL TANK PROTECTOR 44
04 – LUBRICATION SYSTEM 45
COMPONENTS 46
ENGINE LUBRICATION 47
GENERAL 48
MAINTENANCE 48
ENGINE OIL 48
INSPECTION 49
ENGINE OIL PRESSURE 49
PROCEDURES 49
OIL FILTER 49
OIL PRESSURE SWITCH (OPS) 50
ENGINE OIL PRESSURE REGULATOR 51
OIL PUMP 52
ENGINE OIL STRAINER 54
REED VALVE 54
05 – COOLING SYSTEM 55
GENERAL 58
INSPECTION 58
COOLING SYSTEM LEAK TEST 58
MAINTENANCE 59
COOLANT REPLACEMENT 59
PROCEDURES 60
THERMOSTAT 60
RADIATOR CAP 61
RADIATOR 61
COOLANT TANK 61
COOLANT TEMPERATURE SENSOR (CTS) 62
RADIATOR FAN RELAY (R1) 62
RADIATOR FAN 63
WATER PUMP HOUSING 65
WATER PUMP IMPELLER 66
WATER PUMP SHAFT AND SEALS 66
06 – MAGNETO SYSTEM 71
GENERAL 73
PROCEDURES 73
MAGNETO COVER 73
STATOR 74
ROTOR 75
SPRAG CLUTCH 76
SPRAG CLUTCH GEAR 77
STARTER DRIVE GEARS 77
07 – INTAKE MANIFOLD, CYLINDER HEAD AND CYLINDER 79
GENERAL 84
MAINTENANCE 84
VALVE ADJUSTMENT 84
INSPECTION 85
LEAK TEST 85
PROCEDURES 87
INTAKE MANIFOLD 87
VALVE COVER 88
TIMING CHAIN TENSIONER 89
CAMSHAFT TIMING GEAR 90

www.midwestmanuals.com
Sales@midwestmanuals.com

www.midwestmanuals.com

ROCKER ARM 92
TIMING CHAIN 93
CYLINDER HEAD 94
CAMSHAFT 95
VALVE SPRING 100
VALVE 102
VALVE GUIDE 104
CYLINDER 105
PISTON 106
PISTON RINGS 111
08 – BOTTOM END 113
GENERAL 117
PROCEDURES 117
ENGINE DRIVE SHAFT 117
PTO COVER OIL SEAL 119
PTO COVER 119
DRIVE GEARS 122
TIMING CHAIN 123
TIMING CHAIN GUIDE 124
CRANKCASE 124
CRANKSHAFT 128
09 – GEARBOX AND 4X4 COUPLING UNIT 135
GENERAL 138
MAINTENANCE 138
GEARBOX OIL CHANGE 138
PROCEDURES 139
GEARBOX POSITION INDICATOR SWITCHES 139
4WD INDICATOR SWITCH 140
OIL SEALS 140
ACTUATOR 142
OUTPUT SHAFT AND COUPLING MECHANISM 144
GEARBOX 149
10 – SHIFTER 167
GENERAL 168
PROCEDURES 168
TRANSMISSION LEVER 168
LINK ROD 169
SHIFTING PLATE 170

04 ENGINE MANAGEMENT (V490/V660/V810)
01 – OVERVIEW 173
OPERATING PRINCIPLE 174
AIR INDUCTION 174
FUEL SYSTEM 174
ELECTRICAL SYSTEM 176
ENGINE MANAGEMENT SYSTEM 178
ELECTRONIC FUEL INJECTION 178
IGNITION 178
ENGINE MODES OF OPERATION 179
MONITORING SYSTEM 180
DIAGNOSTIC MODE 180
ENGINE MANAGEMENT SYSTEM FLOW CHART 181
02 – EMS DIAGNOSTIC 183
GENERAL 183
FAULT CODES 184
FAULT CODE TABLE 185

www.midwestmanuals.com
Sales@midwestmanuals.com

www.midwestmanuals.com

TABLE OF CONTENTS

03 – ADJUSTMENT AND REPAIR PROCEDURES 193
GENERAL 193
FUEL SYSTEM 193
ELECTRICAL SYSTEM 194
BASIC ADJUSTMENTS 197
IDLE SPEED 197
THROTTLE CABLE 197
CLOSED THROTTLE AND IDLE ACTUATOR RESET 198
IGNITION TIMING 199
REPAIR PROCEDURES 199
MAIN RELAY (R2) 199
D1 DIODE (ECM) 199
ENGINE CONTROL MODULE (ECM) 200
FUEL INJECTOR 203
FUEL RAIL 206
THROTTLE BODY 207
THROTTLE POSITION SENSOR (TPS) 210
IDLE BYPASS VALVE (IBV) 212
CRANKSHAFT POSITION SENSOR (CPS) 214
CAMSHAFT POSITION SENSOR (CAPS) 215
MANIFOLD AIR PRESSURE AND TEMPERATURE SENSOR (MAPTS) 216
COOLANT TEMPERATURE SENSOR (CTS) 218

05 FUEL SYSTEM
01 – FUEL TANK AND FUEL PUMP 219
GENERAL 221
INSPECTION 221
FUEL TANK LEAK TEST 221
FUEL PRESSURE TEST 224
PROCEDURES 225
FUEL HOSE AND OETIKER CLAMPS 225
IN-LINE FUEL FILTER 225
FUEL TANK 226
FUEL PUMP 228
FUEL SYSTEM DIAGNOSTIC FLOW CHART 230

06 ELECTRICAL SYSTEM
01 – COMMUNICATION TOOLS AND B.U.D.S. SOFTWARE 231
COMMUNICATION TOOLS 231
MULTI-PURPOSE INTERFACE (MPI) 231
MULTI-PURPOSE INTERFACE-2 (MPI-2) 232
B.U.D.S. SOFTWARE 233
02 – IGNITION SYSTEM 235
GENERAL 235
PROCEDURES 235
IGNITION SWITCH 235
ENGINE RUN/STOP SWITCH 237
IGNITION COIL 238
SPARK PLUG 240
03 – CHARGING SYSTEM 243
GENERAL 243
PROCEDURES 244
VOLTAGE REGULATOR/RECTIFIER 244
STATOR 246
BATTERY 248
MAIN GROUND 251

www.midwestmanuals.com
Sales@midwestmanuals.com

www.midwestmanuals.com

04 – STARTING SYSTEM **253**
GENERAL 253
PROCEDURES 254
FUSES 254
D2 DIODE (STARTER SOLENOID) 254
START BUTTON 255
STARTING SOLENOID 256
ELECTRIC STARTER 258
05 – DIGITALLY ENCODED SECURITY SYSTEM (DESS) **261**
GENERAL 261
DESS KEY PROGRAMMING 261
TROUBLESHOOTING 262
06 – LIGHTS, GAUGE AND ACCESSORIES **263**
GENERAL 263
PROCEDURES 264
FUSES 264
ACCESSORY RELAY (R3) 265
MULTIFUNCTION GAUGE 266
VEHICLE SPEED SENSOR (VSS) 276
FUEL LEVEL SENDER 277
MULTIFUNCTION SWITCH 277
12-VOLT AUXILIARY POWER OUTLET 279
12-VOLT POWER OUTLET 279
HEADLAMP 280
TAILLIGHT 283
WINCH 283
WINCH CONTROL SWITCH 285
D5 AND D6 DIODES (WINCH RELAY) 286

07 TRANSMISSION
01 – CONTINUOUSLY VARIABLE TRANSMISSION (CVT) **289**
GENERAL 291
PROCEDURES 291
DRIVE BELT 291
DRIVE PULLEY 292
DRIVEN PULLEY 300
CVT AIR GUIDE 305

08 DRIVETRAIN
01 – FRONT DRIVE **307**
GENERAL 309
PROCEDURES 309
TIRES AND WHEELS 309
WHEEL HUB 309
FRONT DRIVE SHAFT 310
DRIVE SHAFT BOOT 312
FRONT DIFFERENTIAL 312
FRONT PROPELLER SHAFT 316
PROPELLER SHAFT U-JOINT 317
02 – REAR DRIVE **319**
GENERAL 321
PROCEDURES 321
TIRES AND WHEELS 321
WHEEL HUB 321
DIFFERENTIAL PROTECTOR 322
DRIVE SHAFT 322

www.midwestmanuals.com
Sales@midwestmanuals.com

www.midwestmanuals.com

TABLE OF CONTENTS

DRIVE SHAFT BOOT 323
REAR PROPELLER SHAFT 323
REAR PROPELLER SHAFT U-JOINT 325
REAR DIFFERENTIAL 326

09 STEERING SYSTEM

01 – STEERING SYSTEM 331
GENERAL 333
PROCEDURES 333
HANDLEBAR GRIP 333
HANDLEBAR COVER 333
HANDLEBAR 333
STEERING COLUMN 334
STEERING COLUMN BEARING 335
TIE-ROD 335
KNUCKLE 336
WHEEL BEARING 338
MULTIFUNCTION SWITCH 339
THROTTLE HANDLE 339
HANDLE BRAKE 340
ADJUSTMENT 340
STEERING ALIGNMENT 340

10 SUSPENSION

01 – FRONT SUSPENSION 343
GENERAL 347
PROCEDURES 347
TIRES AND WHEELS 347
SHOCK ABSORBER AND SPRING 347
LOWER SUSPENSION ARM PROTECTOR 349
LOWER SUSPENSION ARM 349
LOWER BALL JOINT 351
UPPER SUSPENSION ARM 352
UPPER SUSPENSION ARM BRACKET 353
UPPER BALL JOINT 354

02 – REAR SUSPENSION 357
GENERAL 359
PROCEDURES 359
TIRES AND WHEELS 359
REAR SHOCK 359
TORSION BAR 360
TRAILING ARM 361
TRAILING ARM BEARINGS 362

11 BRAKES

01 – FRONT AND REAR BRAKES 365
GENERAL 369
MAINTENANCE 369
BRAKE FLUID 369
PROCEDURES 371
REAR BRAKE LIGHT SWITCH 371
FRONT BRAKE LIGHT SWITCH 372
PARKING BRAKE MECHANISM 372
BRAKE LEVER 373
FRONT MASTER CYLINDER 373
REAR MASTER CYLINDER 374

www.midwestmanuals.com
Sales@midwestmanuals.com

www.midwestmanuals.com

CALIPER 376
BRAKE PADS 377
BRAKE DISC 379
BRAKE PEDAL 380
BRAKE HOSES 380

12 BODY/FRAME

01 – BODY 383
GENERAL 393
PROCEDURES 393
DECALS 393
SEAT 393
CENTRAL PANEL 395
DASH BOARD 396
SIDE PANEL 396
FOOTREST 397
INNER FENDER 397
HEAVY DUTY BUMPER 397
FRONT BUMPER/FRONT SKID PLATE/FRONT FASCIA 398
LUGGAGE RACK 399
FENDER 399
FENDER SUPPORT 402

02 – FRAME 403
GENERAL 405
PROCEDURES 405
FOOTREST SUPPORT 405
BATTERY SUPPORT 405
HITCH 406
RECOVERY HOOK 406
FRAME 407

13 TECHNICAL SPECIFICATIONS

01 – OUTLANDER SERIES 409
02 – RENEGADE MODELS 419

14 ELECTRICAL CONNECTORS AND WIRING DIAGRAMS

01 – ELECTRICAL CONNECTORS 429
DEUTSCH CONNECTORS 429
ECM CONNECTORS 430
MULTIFUNCTION SPEEDOMETER CONNECTOR 433
BATTERY AND STARTER CABLE TERMINALS 434

02 – WIRING DIAGRAMS 437
WIRING CONNECTORS CODING 437

www.midwestmanuals.com
Sales@midwestmanuals.com

www.midwestmanuals.com

SAFETY NOTICE

This manual has been prepared as a guide to correctly service and repair 2008 Can-Am ATVs as describe in the model list in the *INTRODUCTION*.

This edition was primarily published to be used by mechanical technicians who are already familiar with all service procedures relating to BRP products. Mechanical technicians should attend training courses given by B.R.P.T.I.

Please note that the instructions will apply only if proper hand tools and special service tools are used.

It is understood that this manual may be translated into another language. In the event of any discrepancy, the English version shall prevail.

The content depicts parts and/or procedures applicable to the particular product at time of writing. Service and Warranty Bulletins may be published to update the content of this manual. Make sure to read and understand these. It does not include dealer modifications, whether authorized or not by BRP, after manufacturing the product.

In addition, the sole purpose of the illustrations throughout the manual, is to assist identification of the general configuration of the parts. They are not to be interpreted as technical drawings or exact replicas of the parts.

The use of BRP parts is most strongly recommended when considering replacement of any component. Dealer and/or distributor assistance should be sought in case of doubt.

The engines and the corresponding components identified in this document should not be utilized on product(s) other than those for which it was designed.

⚠ WARNING

Unless otherwise specified, engine should be turned OFF and cold for all maintenance and repair procedures.

This manual emphasizes particular information denoted by the wording and symbols:

⚠ WARNING

Identifies an instruction which, if not followed, could cause serious personal injury including possibility of death.

CAUTION: Denotes an instruction which, if not followed, could severely damage vehicle components.

NOTE: Indicates supplementary information needed to fully complete an instruction.

Although the mere reading of such information does not eliminate the hazard, your understanding of the information will promote its correct use. Always use common shop safety practice.

BRP disclaims liability for all damages and/or injuries resulting from the improper use of the contents. We strongly recommend that any services be carried out and/or verified by a highly skilled professional mechanic. It is understood that certain modifications may render use of the vehicle illegal under existing federal, provincial and state regulations.

www.midwestmanuals.com
Sales@midwestmanuals.com

www.midwestmanuals.com

INTRODUCTION

GENERAL INFORMATION

This shop manual covers the following BRP made 2008 Can-Am ATVs.

MODEL	COLOR	ENGINE	MODEL NUMBER
Outlander 500	Green, Red, Yellow	V490	2T8A, 2T8C, 2T8D, 2T8E, 2T8F
Outlander 500 XT	Camo, Green, Red, Yellow	V490	2U8A, 2U8B, 2U8C, 2U8D
Outlander MAX 500	Red	V490	2W8C
Outlander MAX 500 XT	Green, Red, Yellow	V490	2X8A, 2X8B, 2X8C, 2X8D
Outlander 650	Green, Red, Yellow	V660	2N8A, 2N8C, 2N8E, 2N8F, 2N8H, 2N8J
Outlander 650 XT	Camo, Green, Red, Yellow	V660	2P8A, 2P8B, 2P8C, 2P8D, 2P8E, 2P8F
Outlander MAX 650	Green, Red, Yellow	V660	2R8A, 2R8C, 2R8D, 2R8E, 2R8F, 2R8G, 2R8H
Outlander MAX 650 XT	Camo, Green, Red, Yellow	V660	2S8A, 2S8B, 2S8C, 2S8D, 2S8E, 2S8F
Outlander 800	Green, Red, Yellow	V810	2H8A, 2H8C, 2H8E, 2H8F, 2H8H, 2H8J
Outlander 800 XT	Camo, Green, Red, Yellow	V810	2J8A, 2J8B, 2J8C, 2J8D, 2J8E, 2J8F
Outlander Max 800	Green, Red, Yellow Steel Gray Metallic	V810	2K8A, 2K8C, 2K8D, 2K8E, 2K8F, 2K8G, 2K8H
Outlander MAX 800 XT	Camo, Green, Red, Yellow	V810	2L8A, 2L8B, 2L8C, 2L8D, 2L7E, 2L8F, 2L8G
Outlander MAX 800 Ltd	Steel Gray Metallic	V810	2M8A, 2M8B, 2M8C
Renegade 500	Yellow	V490	4E8A, 4E8B, 4E8C
Renegade 800	Yellow	V810	4B8A, 4B8B, 4B8C

www.midwestmanuals.com
Sales@midwestmanuals.com

www.midwestmanuals.com

The information and component/system descriptions contained in this manual are correct at time of writing. BRP however, maintains a policy of continuous improvement of its products without imposing upon itself any obligation to install them on products previously manufactured.

Due to late changes, there may be some differences between the manufactured product and the description and/or specifications in this document.

BRP reserves the right at any time to discontinue or change specifications, designs, features, models or equipment without incurring obligation.

VEHICLE INFORMATION

Model Number



TYPICAL — VEHICLE IDENTIFICATION NUMBER LABEL
1. Model number

Vehicle Identification Number (V.I.N.)

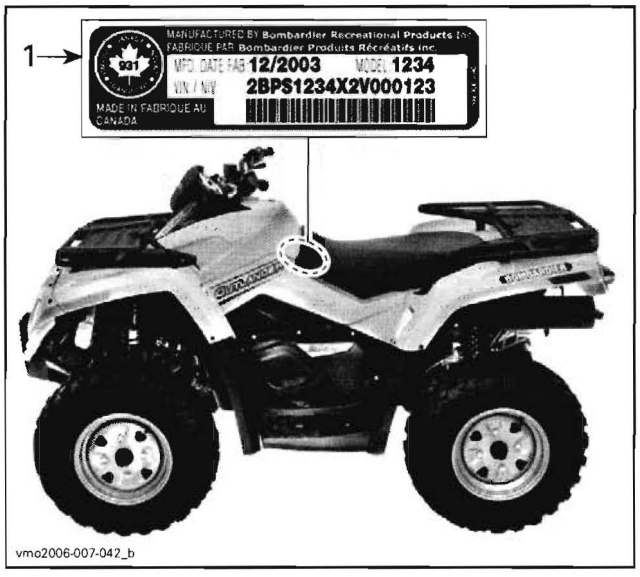

TYPICAL
1. V.I.N. (Vehicle Identification Number)

Engine Identification Number (E.I.N.)

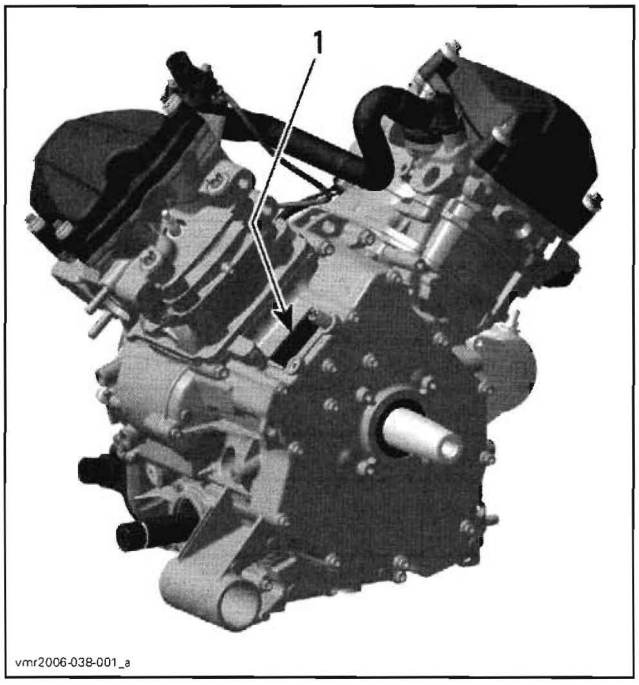

1. Engine Identification Number (E.I.N.)

ENGINE EMISSIONS INFORMATION

Manufacturer's Responsibility

Manufacturers of ATVs engines must determine the exhaust emission levels for each engine horsepower family and certify these engines with the United States of America Environmental Protection Agency (EPA). An emissions control information label, showing emission levels and engine specifications, must be placed on each vehicle at the time of manufacture.

Dealer Responsibility

When performing service on ATVs that carry an emissions control information label, adjustments must be kept within published factory specifications.

Replacement or repair of any emission related component must be executed in a manner that maintains emission levels within the prescribed certification standards.

Dealers are not to modify the engine in any manner that would alter the horsepower or allow emission levels to exceed their predetermined factory specifications.

www.midwestmanuals.com
Sales@midwestmanuals.com

www.midwestmanuals.com

Exceptions include manufacturer's prescribed changes, such as altitude adjustments for example.

Owner Responsibility

The owner/operator is required to have engine maintenance performed to maintain emission levels within prescribed certification standards.

The owner/operator is not to, and should not allow anyone to modify the engine in any manner that would alter the horsepower or allow emissions levels to exceed their predetermined factory specifications.

EPA Emission Regulations

Some ATVs manufactured by BRP are certified to the EPA as conforming to the requirements of the regulations for the control of air pollution from new ATV engines. This certification is contingent on certain adjustments being set to factory standards. For this reason, the factory procedure for servicing the product must be strictly followed and, whenever practicable, returned to the original intent of the design.

The responsibilities listed above are general and in no way a complete listing of the rules and regulations pertaining to the EPA requirements on exhaust emissions for ATVs products. For more detailed information on this subject, you may contact the following locations:

FOR ALL COURIER SERVICES:
U.S. Environmental Protection Agency
Office of Transportation and Air Quality
1310 L Street NW
Washington D.C. 20005

REGULAR US POSTAL MAIL:
1200 Pennsylvania Ave. NW
Mail Code 6403J
Washington D.C. 20460

INTERNET: http://www.epa.gov/otaq/

E-MAIL: otaqpublicweb@epa.gov

SELF-LOCKING FASTENERS PROCEDURE

The following describes the most common application procedures when working with self-locking fasteners.

Use a metal brush or a screw tap to clean the hole properly then use a solvent, let act during 30 minutes and wipe off. The solvent utilization is to ensure the adhesive works properly.

LOCTITE® APPLICATION PROCEDURE

The following describes the most common application procedures when working with Loctite products.

NOTE: Always use proper strength Loctite product as recommended in this manual.

Threadlocker

Uncovered Holes (bolts and nuts)

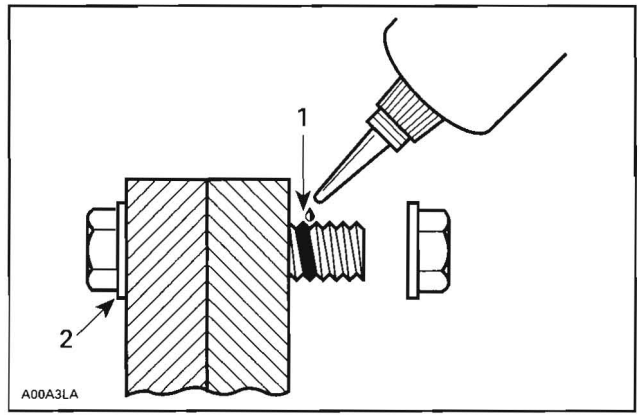

1. Apply here
2. Do not apply

Clean threads (bolt and nut) with solvent.

Apply Loctite Primer N (P/N 293 800 041) on threads and allow to dry.

Choose proper strength Loctite threadlocker.

Fit bolt in the hole.

Apply a few drops of threadlocker at proposed tightened nut engagement area.

Position nut and tighten as required.

Blind Holes

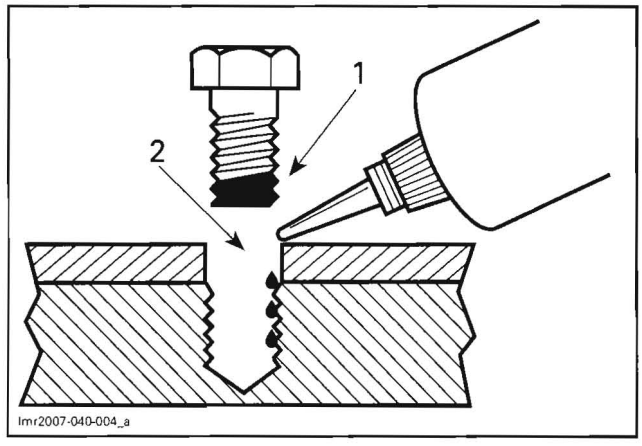

1. On screw threads
2. On hole threads

www.midwestmanuals.com
Sales@midwestmanuals.com

www.midwestmanuals.com

Clean threads (screw and hole) with solvent.

Apply Loctite Primer N (P/N 293 800 041) on threads (screw and nut) and allow to dry for 30 seconds.

Choose proper strength Loctite threadlocker.

Apply 2 or 3 drops along the threaded hole.

NOTE: To avoid a hydro lock situation, do not apply too much Loctite.

Apply several drops on screw threads.

Tighten as required.

Stud in Blind Holes

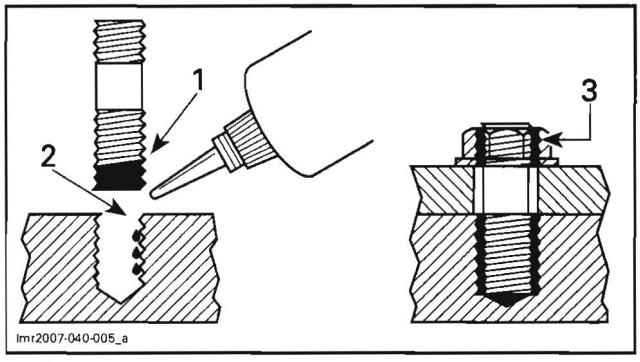

1. On stud threads
2. On hole threads
3. Onto nut threads

Clean threads (stud and hole) with solvent.

Apply Loctite Primer N (P/N 293 800 041) on threads and allow to dry.

Put 2 or 3 drops of proper strength Loctite threadlocker along the threaded hole.

NOTE: To avoid a hydro lock situation, do not apply too much Loctite.

Apply several drops of proper strength Loctite on stud threads.

Install stud.

Install cover, etc.

Apply drops of proper strength Loctite on uncovered threads.

Tighten nuts as required.

Preassembled Parts

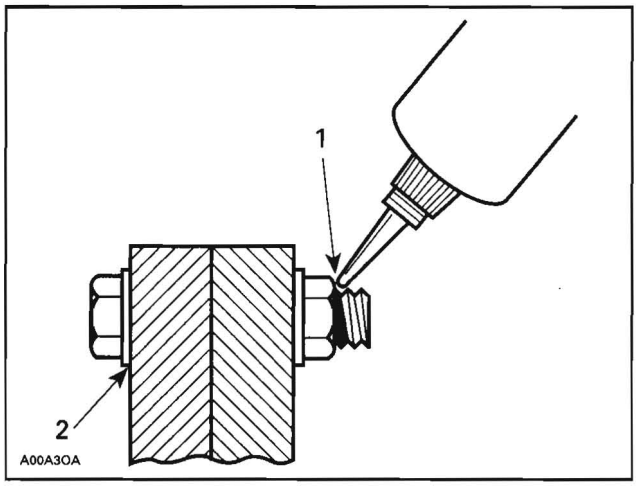

1. Apply here
2. Do not apply

Clean bolts and nuts with solvent.

Assemble components.

Tighten nuts.

Apply drops of proper strength Loctite on bolt/nut contact surfaces.

Avoid touching metal with tip of flask.

NOTE: For preventive maintenance on existing equipment, retighten nuts and apply proper strength Loctite on bolt/nut contact surfaces.

Adjusting Screw

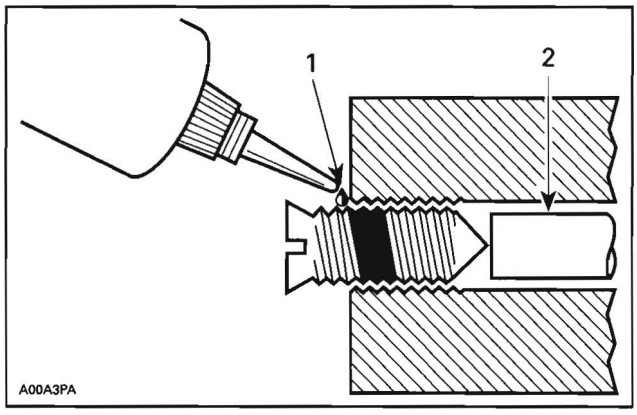

1. Apply here
2. Plunger

Adjust screw to proper setting.

Apply drops of proper strength Loctite threadlocker on screw/body contact surfaces.

Avoid touching metal with tip of flask.

NOTE: if it is difficult to readjust, heat screw with a soldering iron (232°C (450°F)).

www.midwestmanuals.com
Sales@midwestmanuals.com

www.midwestmanuals.com

Stripped Thread Repair

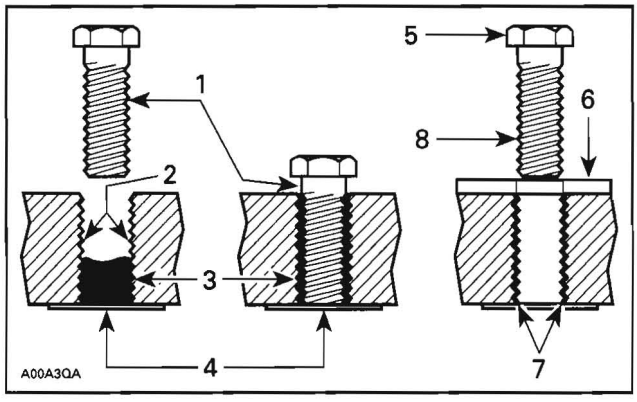

1. *Release agent*
2. *Stripped threads*
3. *Form-A-Thread*
4. *Tape*
5. *Cleaned bolt*
6. *Plate*
7. *New threads*
8. *Threadlocker*

Standard Thread Repair

Follow instructions on Loctite FORM-A-THREAD 81668 package.

If a plate is used to align bolt:

- Apply release agent on mating surfaces.
- Put waxed paper or similar film on the surfaces.

Twist bolt when inserting it to improve thread conformation.

NOTE: NOT intended for engine stud repairs.

Repair of Small Holes/Fine Threads

Option 1: Enlarge damaged hole, then follow *STANDARD THREAD REPAIR* procedure.

Option 2: Apply FORM-A-THREAD on the screw and insert in damaged hole.

Permanent Stud Installation (light duty)

Use a stud or thread on desired length.

DO NOT apply release agent on stud.

Do a *STANDARD THREAD REPAIR*.

Allow to cure for 30 minutes.

Assemble.

Gasket Compound

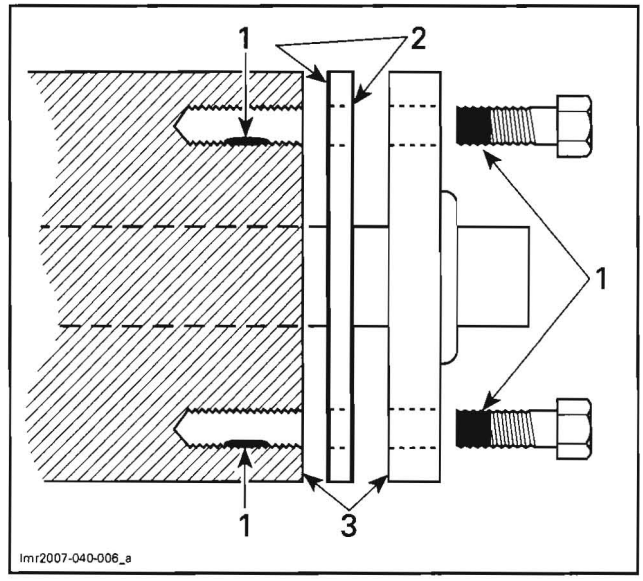

1. *Proper strength Loctite*
2. *Loctite Primer N (P/N 293 800 041) and Loctite 518 (P/N 293 800 038) on both sides of gasket*
3. *Loctite Primer N only*

Remove old gasket and other contaminants with Loctite Chisel remover (P/N 413 708 500). Use a mechanical mean if necessary.

NOTE: Avoid grinding.

Clean both mating surfaces with solvent.

Spray Loctite Primer N on both mating surfaces and on both sides of gasket. Allow to dry 1 or 2 minutes.

Apply Loctite 518 (P/N 293 800 038) on both sides of gasket, using a clean applicator.

Place gasket on mating surfaces and assemble immediately.

NOTE: If the cover is bolted to blind holes (above), apply proper strength Loctite on the threads of hole. Tighten.

If holes are sunken, apply proper strength Loctite on bolt threads.

Tighten as usual.

www.midwestmanuals.com
Sales@midwestmanuals.com

www.midwestmanuals.com

Mounting on Shaft

Mounting with a Press

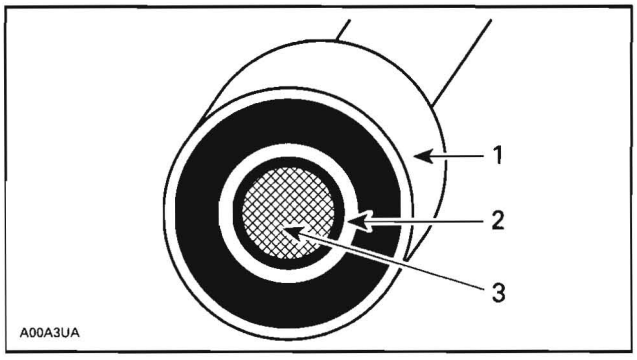

1. Bearing
2. Proper strength Loctite
3. Shaft

Clean shaft external part and element internal part.

Apply a strip of proper strength Loctite on shaft circumference at insert or engagement point.

NOTE: Retaining compound is always forced out when applied on shaft.

DO NOT use antiseize Loctite or any similar product.

No curing period is required.

Mounting in Tandem

Apply retaining compound on internal element bore.

Continue to assemble as shown above.

Case-In Components

Metallic Gaskets

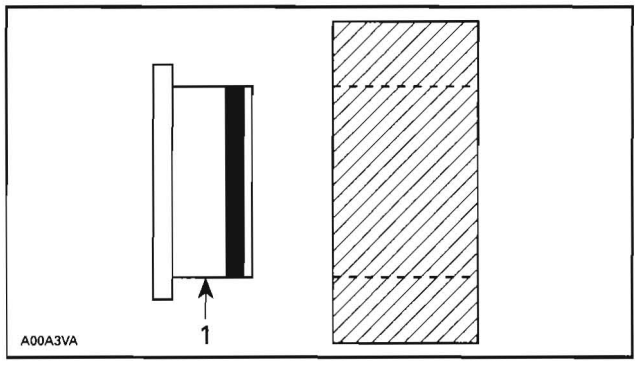

1. Proper strength Loctite

Clean inner housing diameter and outer gasket diameter.

Spray housing and gasket with Loctite Primer N (P/N 293 800 041).

Apply a strip of proper strength Loctite on leading edge of outer metallic gasket diameter.

NOTE: Any Loctite product can be used here. A low strength liquid is recommended as normal strength and gap are required.

Install according to standard procedure.

Wipe off surplus.

Allow it to cure for 30 minutes.

NOTE: Normally used on worn-out housings to prevent leaking or sliding.

It is generally not necessary to remove gasket compound applied on outer gasket diameter.

TIGHTENING TORQUES

Tighten fasteners to torque mentioned in exploded views and/or text. When they are not specified, refer to following table.

⚠ WARNING

Torque wrench tightening specifications must strictly be adhered to.
Locking devices (e.g.: locking tabs, elastic stop nuts, self-locking fasteners, etc.) must be installed or replaced with new ones, where specified. If the efficiency of a locking device is impaired, it must be renewed.

In order to avoid a poor assembling, tighten screws, bolts or nuts in accordance with the following procedure:

Manually screw all screws, bolts and/or nuts.

Apply the half of the recommended torque value.

CAUTION: Be sure to use the proper tightening torque for the proper strength grade.

NOTE: When possible, always apply torque on the nut.

Torque to the recommended torque value.

NOTE: Always torque screws, bolts and/or nuts in a criss-cross sequence.

www.midwestmanuals.com
Sales@midwestmanuals.com

www.midwestmanuals.com

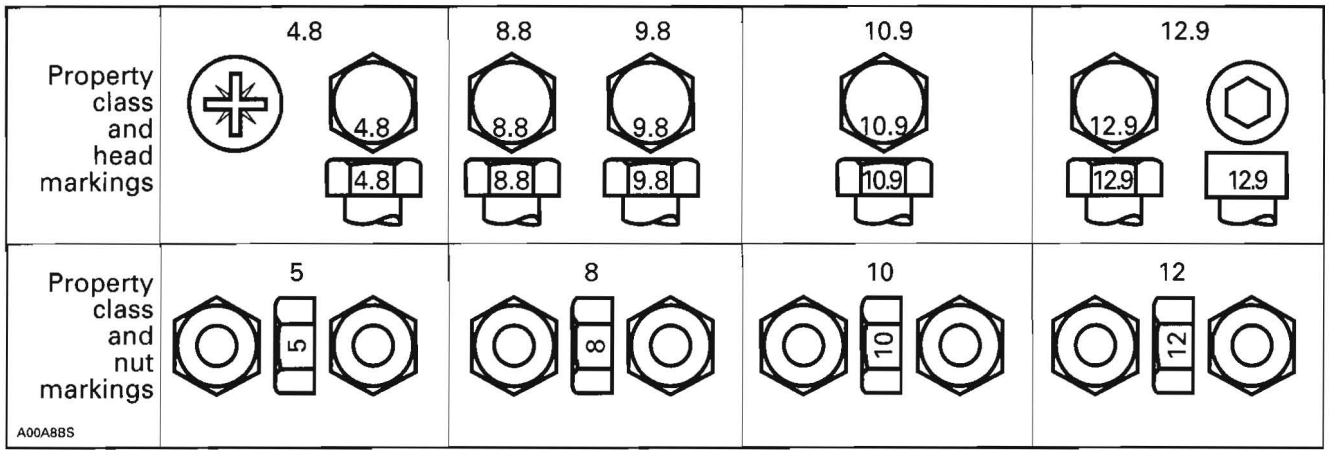

FASTENER SIZE	FASTENER GRADE/TORQUE			
	5.8 Grade	**8.8** Grade	**10.9** Grade	**12.9** Grade
M4	1.5 – 2 N•m (13 – 18 lbf•**in**)	2.5 – 3 N•m N•m (22 – 27 lbf•**in**)	3.5 – 4 N•m (31 – 35 lbf•**in**)	4 – 5 N•m (35 – 44 lbf•**in**)
M5	3 – 3.5 N•m (27 – 31 lbf•**in**)	4.5 – 5.5 N•m (40 – 47 lbf•**in**)	7 – 8.5 N•m (62 – 75 lbf•**in**)	8 – 10 N•m (71 – 89 lbf•**in**)
M6	6.5 – 8.5 N•m (58 – 75 lbf•**in**)	8 – 12 N•m (71 – 106 lbf•**in**)	10.5 – 15 N•m (93 – 133 lbf•**in**)	16 N•m (142 lbf•**in**)
M8	15 N•m (133 lbf•**in**)	25 N•m (18 lbf•ft)	32 N•m (23 lbf•ft)	40 N•m (30 lbf•ft)
M10	29 N•m (21 lbf•ft)	48 N•m (35 lbf•ft)	61 N•m (45 lbf•ft)	73 N•m (53 lbf•ft)
M12	52 N•m (38 lbf•ft)	85 N•m (63 lbf•ft)	105 N•m (77 lbf•ft)	128 N•m (94 lbf•ft)
M14	85 N•m (63 lbf•ft)	135 N•m (100 lbf•ft)	170 N•m (125 lbf•ft)	200 N•m (148 lbf•ft)

www.midwestmanuals.com
Sales@midwestmanuals.com

www.midwestmanuals.com

MANUAL INFORMATION

The manual is divided into many major sections as you can see in the main table of contents at the beginning of the manual.

Each section is divided in various subsections, and again, each subsection has one or more division.

The illustrations show the typical construction of the different assemblies and, in all cases, may not reproduce the full detail or exact shape of the parts shown, however, they represent parts which have the same or a similar function.

CAUTION: Most components in the vehicles are built with parts dimensioned in the metric system. Most fasteners are metric and must not be replaced by customary fasteners or vice-versa. Mismatched or incorrect fasteners could cause damage to the vehicle or possible personal injury.

As many of the procedures in this manual are interrelated, we suggest that before undertaking any task, you read and thoroughly understand the entire section or subsection in which the procedure is contained.

A number of procedures throughout the book require the use of special tools. Before starting any procedure, be sure that you have on hand all required tools, or approved equivalents.

The use of RIGHT and LEFT indications in the text, always refers to the driving position (sitting on the vehicle).

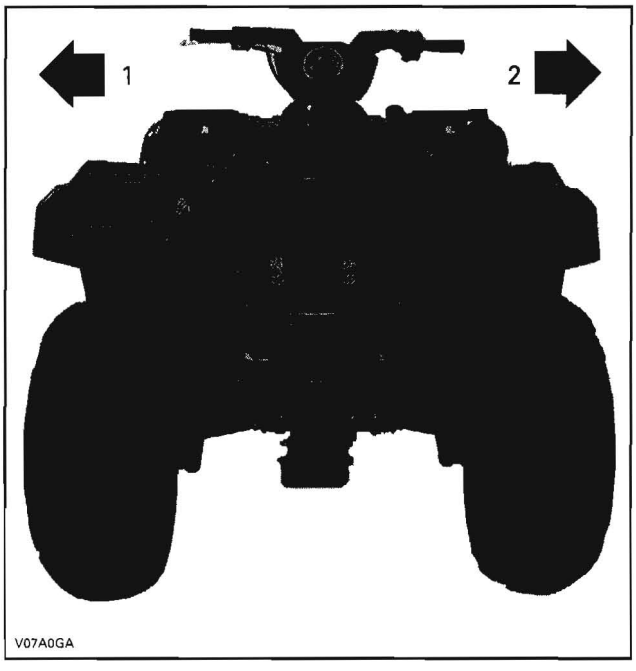

TYPICAL
1. Left
2. Right

This manual uses technical terms which may be different from the ones of the *PARTS CATALOGS*.

When ordering parts always refer to the specific model *PARTS CATALOGS*.

www.midwestmanuals.com
Sales@midwestmanuals.com

www.midwestmanuals.com

TYPICAL PAGE

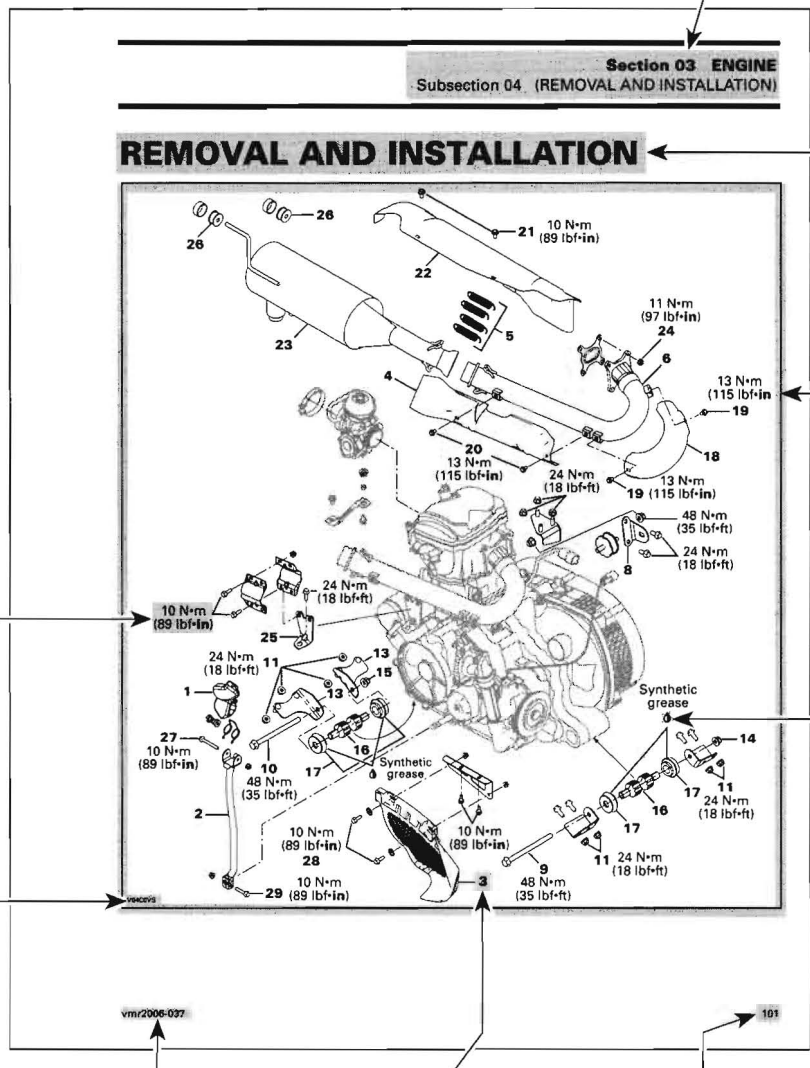

Page heading indicates section and subsection detailed.

Subsection title indicates beginning of the subsection.

Exploded view assists you in identifying parts and related positions.

Tightening torque nearby fastener. In this case, nut must be torqued to 10 N•m or 89 lbf•**in**.

CAUTION: Pay attention to torque specifications. Some of these are in lbf•**in** instead of lbf•ft. Use appropriate torque wrench.

Drop represents a liquid product to be applied to a surface.

Illustration number for publishing process.

Document number for publishing process.

Bold face number indicates special procedure concerning this part.

Page number

vmr2008-040-001_aen

www.midwestmanuals.com
Sales@midwestmanuals.com

www.midwestmanuals.com

TYPICAL PAGE

Section 03 ENGINE
Subsection 06 (MAGNETO SYSTEM)

Title indicates main procedure to be carried-out.

BEARING

Inspection

Ball bearing **no. 10** must rotate freely. Othewise, replace it.

Removal

- Heat up the magneto housing cover to about 100°C (212°F) for an easy ball bearing removal.

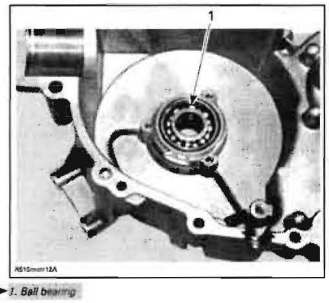

Call-outs for above illustration.

1. Ball bearing

Installation

For installation also heat the magneto housing up to about 100°C (212°F) to put ball bearing in place.

Place new ball bearing in freezer for 10 minutes approximately.

Reinstall other removed parts in the reverse order.

STATOR AND TRIGGER COIL

Removal

Remove.

- magneto housing cover **no. 7**
- screw **no. 11** and **12**
- stator with trigger coil **no. 13**.

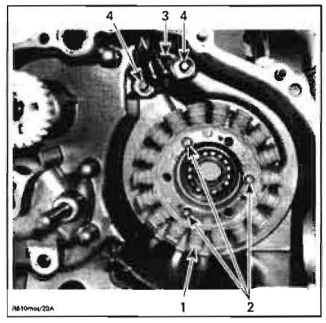

1. Stator
2. Stator screws
3. Trigger coil
4. Trigger coil screws

Inspection

Check stator and trigger coil condition. If damaged replace the faulty part.

For electrical inspection, refer to CHARGING SYSTEM for the stator and IGNITION SYSTEM for the trigger coil.

Bold face number following part name refers to exploded view at beginning of subsection.

Reference to look up a certain section and subsection. In this case it concerns IGNITION SYSTEM.

138 vmr2008-048

V01A71S

www.midwestmanuals.com
Sales@midwestmanuals.com

www.midwestmanuals.com

MAINTENANCE CHART

MAINTENANCE CHART

The schedule should be adjusted according to operating conditions and use.

NOTE: The chart gives an equivalence between number of hours and months/year. Perform the maintenance operation to whatever time comes first.

IMPORTANT: ATV rental operations or intensive use of ATV, will require greater frequency of inspection and maintenance.

A: ADJUST C: CLEAN I: INSPECT L: LUBRICATE R: REPLACE	**10 HOURS OR 300 KM (185 mi)** **(The initial maintenance is very important and must not be neglected.)**		**EVERY 25 HOURS OR 750 KM (470 mi**	**EVERY 50 HOURS OR 1500 KM (930 mi)**	**EVERY 100 HOURS OR 3000 KM (1865 mi) OR 1 YEAR**	**EVERY 200 HOURS OR 6000 KM (3730 mi) OR 2 YEAR**	
PART/TASK							**REFER TO**
ENGINE							
Engine oil and filter	R			R			*LUBRICATION SYSTEM*
Valve adjustment	I, A			I, A			*INTAKE MANIFOLD, CYLINDER HEAD AND CYLINDER*
Condition of engine seals	I			I			*ENGINE*
Engine mounting fasteners	I			I			*ENGINE REMOVAL AND INSTALLATION*
Air filter (1)		C	R				*AIR INTAKE SYSTEM*
Exhaust system	I			I			*EXHAUST SYSTEM*
Spark arrester				C			
Coolant	I			I (2)	R		*COOLING SYSTEM*
Radiator cap/cooling system pressure test	I				I		
Radiator condition/cleanliness (radiator fins)	I		I				
ENGINE MANAGEMENT SYSTEM							
Sensors (4)	I			I			*ENGINE MANAGEMENT*
Fault code reading (4)	I			I			
FUEL SYSTEM							
Throttle body	I			I,L			*ENGINE MANAGEMENT*
Throttle cable	I, A		I, A, L				
Fuel lines, fuel rail, connections, check valves and fuel tank pressure test (4)	I				I		*FUEL TANK AND FUEL PUMP*
In-line fuel filter				R			
Fuel pump pressure test					I		

www.midwestmanuals.com
Sales@midwestmanuals.com

www.midwestmanuals.com

A: ADJUST
C: CLEAN
I: INSPECT
L: LUBRICATE
R: REPLACE

PART/TASK	10 HOURS OR 300 KM (185 mi) (The initial maintenance is very important and must not be neglected.)	EVERY 25 HOURS OR 750 KM (470 mi	EVERY 50 HOURS OR 1500 KM (930 mi)	EVERY 100 HOURS OR 3000 KM (1865 mi) OR 1 YEAR	EVERY 200 HOURS OR 6000 KM (3730 mi) OR 2 YEAR	REFER TO
ELECTRICAL SYSTEM						
Spark plug (3) (4)	I				R	*IGNITION SYSTEM*
Battery connections	I		I			*CHARGING SYSTEM*
ECM connectors (visual inspection without disconnecting)				I		*ELECTRICAL CONNECTORS*
Electrical connections and fastening (ignition system, starting system, fuel injectors etc.)	I			I		
Digitally Encoded Security System	I			I		*DIGITALLY ENCODED SECURITY SYSTEM*
Condition of ignition switch, start button and engine run/stop switch	I			I		*LIGHTS, GAUGE AND ACCESSORIES*
Condition of lighting system (HI/LO intensity, brake light, beam aiming, etc.)	I			I		
Winch connections						Refer to *BASIC GUIDE TO WINCHING TECHNIQUES*
CONTINUOUSLY VARIABLE TRANSMISSION (CVT)						
Drive belt				I		*CVT*
Drive and driven pulleys				I, C		
One-way bearing inside CVT				I, L		
CVT air inlet	I		I, C			
GEARBOX						
Gearbox oil (1)	R			I	R	*GEARBOX AND 4 X 4 COUPLING UNIT*
Speed sensor	C			C		
4 x 4 coupling unit	I			I		
DRIVE TRAIN						
Drive shaft boots and protectors	I	I				*FRONT DRIVE* and *REAR DRIVE*
Rear propeller shaft joints (1)	I		I, L			
Drive shaft joints			I			
Wheel bearings				I		
Wheel nuts/studs	I		I			
Tire wear and pressure	Every ride					
Front and rear differentials oil level, seals and vents	I		I		R	

www.midwestmanuals.com
Sales@midwestmanuals.com

www.midwestmanuals.com

A: ADJUST C: CLEAN I: INSPECT L: LUBRICATE R: REPLACE	10 HOURS OR 300 KM (185 mi) (The initial maintenance is very important and must not be neglected.)	EVERY 25 HOURS OR 750 KM (470 mi	EVERY 50 HOURS OR 1500 KM (930 mi)	EVERY 100 HOURS OR 3000 KM (1865 mi) OR 1 YEAR	EVERY 200 HOURS OR 6000 KM (3730 mi) OR 2 YEAR	
PART/TASK						REFER TO
STEERING SYSTEM						
Handlebar fastener				I		*STEERING SYSTEM*
Steering system mechanism (column, bearing, etc.) (2)	I			I		
Tie rod ends			I			
Front wheel alignment	I			I, A		
SUSPENSION						
Trailing arms				I		*REAR SUSPENSION*
Trailing arm bearings					I	
Shock absorbers			I			*FRONT SUSPENSION* and *REAR SUSPENSION*
A-arms			I, L			*FRONT SUSPENSION*
Ball joints		I				
BRAKES						
Brake fluid	I	I			R	*HYDRAULIC BRAKES*
Brake system (discs, hoses, etc.)				I		
Brake pads (1)		I				
BODY/FRAME						
Frame fastener			I			*BODY/FRAME*
Frame				I		
Hitch/trailer ball condition (if installed)	Every ride					
Storage cover latches	Every ride					
Operator's seat and its fasteners	Every ride					
Passenger's seat or storage box and its fasteners (MAX models)	Every ride					
Grab handles (MAX models)	Every ride					
Vehicle cleaning and protection			C			

(1) More often under severe use such as dusty area, sand, snow, wet or muddy conditions.

(2) Every 100 hours, check coolant strength.

(3) Make sure that the spark plug gap is correct.

(4) Emission-related component.

www.midwestmanuals.com
Sales@midwestmanuals.com

www.midwestmanuals.com

www.midwestmanuals.com
Sales@midwestmanuals.com

www.midwestmanuals.com

PRESEASON PREPARATION

Prior to use vehicle, proper vehicle preparation is required after performing the storage procedure.

Any worn, broken or damaged parts found during the storage procedure should have been replaced. If not, proceed with the replacement.

Using the maintenance chart, performed items in the column indicated: EVERY 100 HOURS OR 3000 km (1865 mi) OR 1 YEAR.

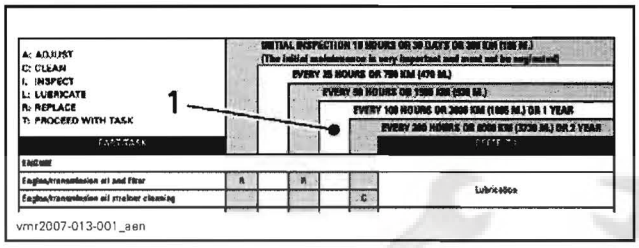

1. Use this column

Furthermore, proceed with the following:

Vehicles Prepared as per Storage Procedure

Remove rags from: CVT inlet and outlet hoses, engine air intake and muffler.

Test drive vehicle to confirm proper operation.

Vehicles Not Prepared as per Storage Procedure

Replace engine oil and filter.

Drain fuel tank and fill with fresh fuel.

Test drive vehicle to confirm proper operation.

Midwest Manuals
sales@midwestmanuals.com
www.midwestmanuals.com

www.midwestmanuals.com
Sales@midwestmanuals.com

www.midwestmanuals.com

www.midwestmanuals.com
Sales@midwestmanuals.com

www.midwestmanuals.com

STORAGE PROCEDURES

SERVICE PRODUCTS

Description	Part Number	Page
BRP heavy duty cleaner	293 110 001	8
XP-S Lube	293 600 016	8
BRP fuel stabilizer	413 408 600	7
Vinyl & Plastic Cleaner	413 711 200	8
storage oil	413 711 600	7
storage oil (US)	413 711 900	7

If the ATV is not used or is to be stored for an extended period of time, more than 4 months, be sure to perform the storage procedures described below.

FUEL STABILIZER

With the new fuel additives, it is critical to use the BRP fuel stabilizer (P/N 413 408 600) or an equivalent to prevent fuel deterioration and fuel system gumming. Follow the manufacturer's instructions for proper use.

CAUTION: Fuel stabilizer should be added prior to engine lubrication to ensure fuel system components protection against varnish deposits.

Pour fuel stabilizer in fuel tank. Fill up fuel tank.

Do not drain fuel system.

ENGINE LUBRICATION

Engine internal parts must be lubricated to protect them from rust formation during the storage period.

⚠ WARNING

This procedure must only be performed in a well-ventilated area. Do not run engine during storage period.

Proceed as follows:

- Start the engine and allow it to run at idle speed until the engine reaches its operating temperature.
- Stop the engine.
- Change engine oil and filter. Refer to *LUBRICATION SYSTEM*.
- Remove spark plugs and spray storage oil (P/N 413 711 600) into each cylinder.

NOTE: For US citizens, use storage oil (US) (P/N 413 711 900) only.

CAUTION: Do not inject storage oil into throttle body bore to avoid blocking idle bypass valve.

- Press start button, 1 or 2 seconds maximum, to lubricate cylinders.
- Reinstall the spark plugs.
- Remove the battery. Store it in dry and cool place out of the sun, refer to *BATTERY* in *CHARGING SYSTEM*.

RAGS INSTALLATION

Using cleans rags, block the following locations: CVT inlet and outlet hoses, air intake inlet and muffler. The rags will prevent the intrusion of small animals, leaves or other debris.

CAUTION: Do not forget, these rags must be removed during preseason preparation before starting the vehicle.

To reach the CVT inlet hose and the air intake inlet, remove the front inner fender on the left side of vehicle.

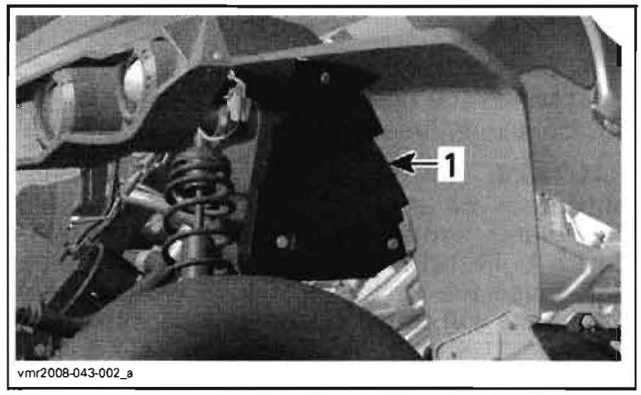

TYPICAL — RENEGADE SHOWN
1. Inner fender

www.midwestmanuals.com
Sales@midwestmanuals.com

www.midwestmanuals.com

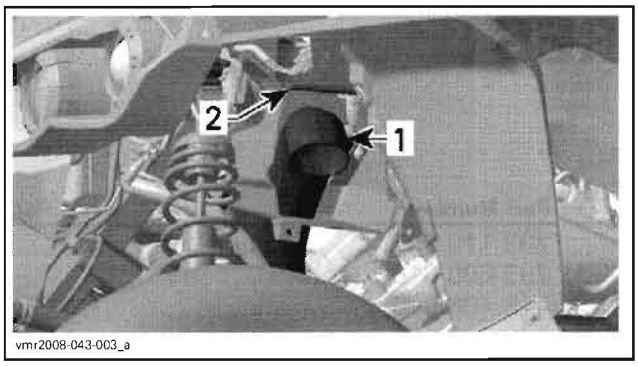

TYPICAL — RENEGADE SHOWN
1. CVT inlet hose
2. Air intake inlet

The CVT outlet hose is located at the rear of engine, against vertical frame beam. The removal of the left side panel is necessary to reach the hose.

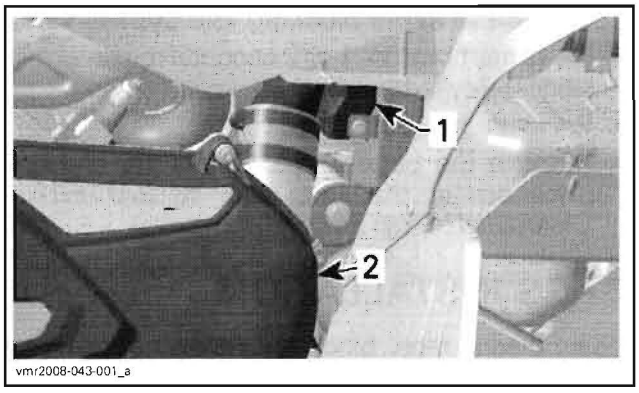

TYPICAL — RENEGADE SHOWN
1. CVT outlet hose
2. CVT cover

COOLANT DENSITY

Test coolant density using an antifreeze hydrometer.

NOTE: Follow manufacturer's instructions for proper use.

A 50/50 mixture of antifreeze and distilled water will provide the optimum cooling, corrosion protection and antifreeze protection.

CAUTION: Do not use tap water, straight antifreeze or straight water in the system. Tap water contains minerals and impurities which build up in the system. Straight water will cause the system to freeze while straight antifreeze will cause system temperature problems.

Change coolant if necessary. Refer to *COOLING SYSTEM*.

DRIVE AND DRIVEN PULLEYS PROTECTION

Remove drive belt from pulleys.

Inspect and clean pulleys then spray XP-S Lube (P/N 293 600 016) on pulley faces.

Do not reinstall drive belt. Close CVT cover.

VEHICLE CLEANING

To facilitate the inspection and ensure adequate lubrication of components, it is recommended to clean the entire vehicle.

Wash and dry the vehicle.

CAUTION: Never use a high pressure washer to clean the vehicle. USE LOW PRESSURE ONLY (like a garden hose). The high pressure can cause electrical or mechanical damages.

Remove any dirt or rust.

To clean the vinyl or plastic parts, use only flannel clothes with Vinyl & Plastic Cleaner (P/N 413 711 200).

CAUTION: It is necessary to use flannel cloths on plastic parts to avoid damaging surfaces. Never clean plastic parts with strong detergent, degreasing agent, paint thinner, acetone, products containing chlorine, etc.

To clean the entire vehicle, including metallic parts use BRP heavy duty cleaner (P/N 293 110 001).

Inspect the vehicle and repair any damage. Touch up all metal spots where paint has been scratched off. Spray all metal parts with XP-S Lube (P/N 293 600 016).

VEHICLE PROTECTION

Protect the vehicle with a cover to prevent dust accumulation during storage.

CAUTION: The vehicle has to be stored in a cool and dry place and covered with an opaque tarpaulin. This will prevent sun rays and grime from affecting plastic components and vehicle finish.

www.midwestmanuals.com
Sales@midwestmanuals.com

www.midwestmanuals.com

SPECIAL PROCEDURES

SERVICE PRODUCTS

Description	Part Number	Page
XP-S Lube	293 600 016	9–10

TURN OVER

If the check engine indicator light stays ON after starting engine and the engine oil level is good, check the following:

- Oil filter for contamination.
  - Replace oil filter and oil.
- Oil pressure regulator valve stays open in the crankcase due to contamination (metallic particles).
  - Clean and/or replace the valve.
- Valve piston stuck in the oil pump housing.
  - Repair valve piston.
- Oil pressure switch for damages.
  - Replace it if necessary.
- Oil pump cleanliness and working.
  - Clean and/or replace oil pump if necessary.
- Oil strainer cleanliness and damages.
  - Clean and/or replace oil strainer.

ATV IMMERSION

ATV Submerged for a Long Time (over one hour)

Disassemble engine and transmission to clean the internal parts and check if there is no rust or corrosion on any internal parts. Refer to *TRANSMISSION* and to the specific *ENGINE* section.

Drain air filter housing then clean and dry air filter.

Remove muffler and empty it. Let muffler dry then reinstall it on the vehicle.

Flush fuel tank and refill with new gas.

Lubricate the throttle body. Refer to *ENGINE MANAGEMENT*.

Look for water in:

- brake system (replace brake fluid)
- differentials (drain oil and check internal parts for rust or corrosion then refill).

Lubricate all cables. Check if the cables operate properly.

Spray all metal parts with XP-S Lube (P/N 293 600 016).

Test drive to confirm all is working well (electrical and mechanical components).

ATV Submerged for a Short Time (fewer one hour)

Check if engine oil is contaminated (oil will be milky). If so, perform the following instructions.

Drain engine oil.

Drain air filter housing then clean and dry air filter.

Look for water in fuel tank, in doubt, flush fuel tank and refill with new gas.

Drain the CVT housing by removing the bottom rear screw.

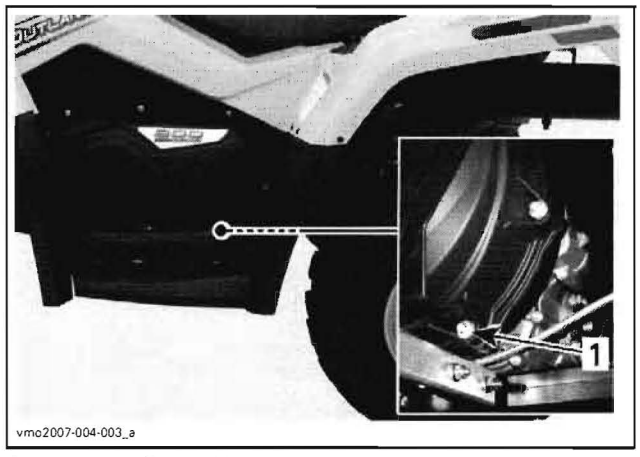

OUTLANDER SHOWN
1. CVT cover drain plug

Remove the CVT cover then clean and check all parts of CVT. Refer to *CVT*.

Lubricate all cables. Check if the cables operate properly.

Remove spark plugs then crank engine several times.

Add a small quantity of engine oil in cylinders (approximately 2 teaspoonfuls). Do not reinstall spark plugs at this moment.

Refill engine at the proper level with the recommended oil. Crank engine several times.

www.midwestmanuals.com
Sales@midwestmanuals.com

www.midwestmanuals.com

Check condition of spark plugs. If spark plugs appear good reinstall them, if not install new ones.

Start the engine and allow it to run at idle speed until the engine reaches its operating temperature.

Stop the engine.

Change engine oil and filter.

NOTE: Change oil as many times as necessary, until there is no white appearance in engine oil.

Spray all metal parts with XP-S Lube (P/N 293 600 016).

Test drive to confirm all is working well (electrical and mechanical components).

www.midwestmanuals.com
Sales@midwestmanuals.com

www.midwestmanuals.com

TROUBLESHOOTING CHART

The following charts are provided to help in diagnosing the probable source of troubles. It should be used as a guideline. This section pertains to engine mechanical components only. Some related problems can come from other systems such as ignition system, fuel system etc. and have an impact on the engine. Ensure to check the other systems before concluding that the engine is faulty.

ELECTRICAL SYSTEM

Symptom: **STARTER DOES NOT TURN**

1. **Ignition switch is in the OFF position.**
   - *Turn switch to the ON position.*
2. **Engine run/stop switch is in the OFF position.**
   - *Turn switch to the RUN position.*
3. **DESS key not programmed for the vehicle.**
   - *Refer to DESS SYSTEM.*
4. **Defective DESS key or switch.**
   - *Check key and switch.*
5. **Burnt fuse.**
   - *Check main fuse and wiring condition.*
6. **Transmission is not set to Park or Neutral position or brake switch is not activated.**
   - *Set transmission to PARK or NEUTRAL position or squeeze the brake lever or press on brake pedal.*
7. **Weak battery.**
   - *Recharge battery.*
8. **Poor contact of battery terminal(s) or ground cable connections.**
   - *Clean and tighten terminal(s).*
9. **Poor contact or open circuit of: start button, engine run/stop switch, ignition switch or starting solenoid.**
   - *Check and replace defective part.*
10. **GBPS switch(es) is (are) defective.**
    - *Check GBPS switch(es) and wiring condition. Refer to GEARBOX.*
11. **Diode incorrectly installed or failure.**
    - *Check diode installation and condition.*
12. **Defective ECM.**
    - *Check. Refer to ENGINE MANAGEMENT.*
13. **Multifunction speedometer replaced but not updated with proper coding.**
    - *Use B.U.D.S. and update ECM. Refer to LIGHTS, GAUGES AND ACCESSORIES.*
14. **Defective brake switch.**
    - *Check brake switch and its connectors. Replace defective part.*
15. **Engine mechanical problem (ensure that other electric components are good).**
    - *Check and replace defective part.*

www.midwestmanuals.com
Sales@midwestmanuals.com

www.midwestmanuals.com

Symptom: **STARTER TURNS, BUT DOES NOT CRANK THE ENGINE**

1. **Worn sprag clutch.**
   - *Replace.*
2. **Worn gears.**
   - *Replace.*

Symptom: **STARTER MOTOR KEEPS RUNNING**

1. **Shorted starting solenoid switch winding.**
   - *Replace starter solenoid.*
2. **Melted solenoid contacts.**
   - *Replace starter solenoid.*
3. **Sticking or defective starter clutch.**
   - *Lubricate or replace electric starter.*
4. **Start button stock.**
   - *Fix or remove mud/ice/dirt or replace multifunction switch.*

COOLING SYSTEM

Symptom: **HIGH ENGINE OPERATING TEMPERATURE**

1. **Check coolant level.**
   - *Coolant level lower than recommended. Refill (refer to COOLING SYSTEM).*
2. **Check for air bubbles in cooling system.**
   - *Air in cooling system. Refill and bleed cooling system (refer to COOLING SYSTEM).*
3. **Check temperature sensor for electrical/mechanical failure.**
   - *Temperature sensor defective. Replace.*
4. **Check thermostat.**
   - *Thermostat defective (does not open when engine gets hot). Replace (refer to COOLING SYSTEM).*
5. **Check leak indicator hole (in crankcase MAG side-water pump housing area) if coolant leaks.**
   - *Coolant leaking from indicator hole means a damaged water pump rotary seal. Replace rotary seal (refer to COOLING SYSTEM).*
6. **Check condition of hoses and hose clamps fixation.**
   - *Hoses are brittle and/or hard. Replace.*
   - *Hose clamps are loose. Retighten clamps.*
7. **Check condition of impeller located on the water pump shaft.**
   - *Impeller wings broken and/or impeller threads are damaged. Replace (refer to COOLING SYSTEM).*
8. **Check gasket on water pump housing.**
   - *Gasket on water pump housing leaks. Retighten screws and/or replace gasket.*
9. **Check cylinder head and/or cylinder base gasket.**
   - *Worn out gasket(s) is (are) causing coolant leakage. Replace.*
10. **Check coolant drain screw on water pump housing MAG side (marked "DRAIN").**
    - *Copper ring on drain screw leaks. Retighten screw and/or replace copper ring.*

www.midwestmanuals.com
Sales@midwestmanuals.com

www.midwestmanuals.com

Symptom: **HIGH ENGINE OPERATING TEMPERATURE** (cont'd)

11. Check intermediate gear(s) behind of PTO cover.
- *Worn out and/or broken gear(s) is/are causing less coolant supply. Replace worn out and/or broken gear(s) (refer to BOTTOM END).*

12. Check if water pump shaft is seized.
- *Water pump shaft does not turn. Replace defective part(s).*

13. Check cooling fan and connection.
- *Fan motor faulty. Replace.*
- *Wire harness is brittle or hard (no connection). Replace.*

14. Check radiator fan switch and fuse 20 A.
- *Faulty fan switch and/or faulty fuse. Replace defective part(s).*

15. Check radiator condition for leakage.
- *Radiator swelled, cracked or deformed. Replace radiator.*

16. Check mud/dust in radiator fins.
- *Radiator fin obstructed, hard air cooling. Clean radiator fins.*

17. Check radiator cap.
- *Defective radiator cap relief valve. Replace.*

18. Check vent holes in coolant expansion tank cap.
- *Inner cap vent hole of coolant expansion tank is clogged. Replace.*
- *Cap vent hole of coolant expansion tank is clogged. Replace.*

MAGNETO SYSTEM

Symptom: **BATTERY NOT CHARGING OR CHARGING VOLTAGE INADEQUATE**

1. Check battery.
- *Battery shows less power. Reload battery.*
- *Battery has electrical failure. Replace.*

2. Check magneto for damage and/or electrical failure.
- *Radial position of rotor wrong due to broken Woodruff key. Replace Woodruff key.*
- *Coating on stator winding is damaged. Replace stator.*
- *Resistance value is out of specification (refer to TECHNICAL SPECIFICATIONS). Replace magneto.*
- *Connector on magneto is damaged and/or has electrical failure. Repair and clean contacts of connector.*

3. Check voltage regulator/rectifier.
- *Refer to CHARGING SYSTEM.*

4. Check wiring harness for cracks or other damages.
- *Harness shows electrical failure and/or other damages. Replace/repair wiring harness.*

www.midwestmanuals.com
Sales@midwestmanuals.com

www.midwestmanuals.com

LUBRICATION

Symptom: **LOW OR NO OIL PRESSURE/HIGH OIL CONSUMPTION**

1. **Check oil level and search for leakage on crankcase and/or sealing parts.**
   - *Crankcase is leaking due to damage. Rebuild engine with new crankcase and gasket parts. Use recommended oil (refer to TECHNICAL SPECIFICATIONS).*
   - *Crankcase is leaking due to loose screws. Retighten screws with recommended torque.*
   - *Sealing rings, O-rings and/or gaskets are brittle, hard or damaged. Replace damaged parts.*
   - *Piston rings worn out (blue colored engine exhaust emission). Replace piston rings (refer to INTAKE MANIFOLD, CYLINDER HEAD AND CYLINDER).*
   - *Piston rings are broken (low compression). Replace piston rings (refer to INTAKE MANIFOLD, CYLINDER HEAD AND CYLINDER).*
   - *Valve stem seal damaged and/or sealing lip is hard and/or brittle. Replace all valve stem seals.*
2. **Check oil filter for contamination.**
   - *Oil filter clogged. Replace oil and oil filter at the same time. Use recommended oil (refer to TECHNICAL SPECIFICATIONS).*
3. **Check oil drain plug on engine bottom.**
   - *Plug is loose and/or gasket ring is missing. Retighten the plug and/or place gasket ring.*
4. **Check leak indicator hole if oil leaks (in crankcase MAG side-water pump housing area).**
   - *Oil leaking from leak indicator hole means a damaged oil seal on water pump shaft. Replace oil seal (refer to COOLING SYSTEM).*
5. **Check oil pressure switch function.**
   - *Oil pressure switch damaged. Replace oil pressure switch.*
6. **Check oil orifice(s) on the oil pump suction side.**
   - *Oil orifice(s) is (are) clogged. Clean from contamination. Replace oil and oil filter if necessary (refer to LUBRICATION SYSTEM).*
7. **Check oil pump function.**
   - *Oil pump rotor is out of wear limit. Replace oil pump (refer to LUBRICATION SYSTEM).*
   - *Oil pump seized due to oil leakage and/or air inclusion. Replace oil pump (refer to LUBRICATION SYSTEM).*
   - *Gears driving oil pump are broken or otherwise damaged. Replace gears.*
   - *Incorrect oil being used. Use recommended oil (refer to TECHNICAL SPECIFICATIONS).*
8. **Check oil pressure regulator valve (spring) function.**
   - *Valve spring damaged (valve always open). Replace spring.*
   - *Valve piston is worn or broken. Replace valve piston (refer to LUBRICATION SYSTEM).*
   - *Valve piston stays open due to contamination. Clean or repair valve piston.*
9. **Check plain bearings in crankcase for heavy wear.**
   - *Plain bearings out of specification (increased clearance). Replace plain bearings (refer to BOTTOM END).*
10. **Check engine oil strainer in crankcase.**
    - *Oil strainer is clogged due to contamination. Clean or replace strainer and diagnose causes. Replace possible damaged parts (refer to BOTTOM END).*

Symptom: **OIL CONTAMINATION (white appearance)**

1. **Check leak indicator hole (in crankcase MAG side-water pump housing area) if coolant and oil leaks.**
   - *Leakage of oil/colant mixture from indicator bore means damaged water pump seal ring and rotary seal. Replace sealing ring, rotary seal and change oil, oil filter and/or coolant (refer to LUBRICATION SYSTEM, COOLING SYSTEM and BOTTOM END).*

www.midwestmanuals.com
Sales@midwestmanuals.com

www.midwestmanuals.com

Symptom: **OIL CONTAMINATION (white appearance)** (cont'd)

2. **Check cylinder head and/or cylinder base gasket.**
   - *Gasket damaged or leaking. Retighten cylinder head with recommended torque and/or replace gasket.*
3. **Check tightening torque of cylinder head screws.**
   - *Screws not properly tightened. Retighten screws to recommended torque and replace oil.*
4. **Check oil for particles (may indicate possible engine internal damages).**
   - *Oil contamination due to metal or plastic particles. Replace possibly damaged part(s) including oil and oil filter. Use recommended oil (refer to TECHNICAL SPECIFICATIONS).*

CYLINDER AND HEAD

Symptom: **UNUSUAL ENGINE NOISE AND/OR VIBRATION**

1. **Check noise coming from cylinder head area.**
   - *Improper valve clearance adjustment. Readjust valve clearance and/or replace defective part(s).*
   - *Faulty chain tensioner. Replace spring and/or mechanism.*
   - *Chain guide worn out. Replace chain guide.*
   - *Stretched chain and/or worn out sprockets. Replace chain and sprockets.*
   - *Sprocket screws got loose. Retighten screws with recommended torque.*
   - *Rocker arm(s) is (are) worn out (valve adjustment). Readjust valve clearance and/or replace rocker arm(s).*
   - *Incorrect camshaft timing adjustment. Replace damaged components and readjust camshaft timing (refer to INTAKE MANIFOLD, CYLINDER HEAD AND CYLINDER).*

Symptom: **OIL CONTAMINATION ON CYLINDER AND/OR HEAD**

1. **Check screws for torque.**
   - *Loose screws. Retighten screws with recommended torque.*
   - *Gaskets are brittle, hard, worn out or otherwise damaged. Replace damaged gaskets, O-rings or the V-ring on breather.*

CRANKSHAFT

Symptom: **UNUSUAL ENGINE NOISE AND/OR VIBRATIONS**

1. **Check noise coming from crankshaft area.**
   - *Crankshaft plain bearings are damaged. Replace crankshaft plain bearings (refer to BOTTOM END).*
   - *Connecting rod plain bearings are damaged. Replace connecting rod plain bearings (refer to BOTTOM END).*
   - *Magneto rotor got loose. Replace damaged components and retighten rotor retaining screw with recommended torque (refer to MAGNETO SYSTEM).*

GEARBOX

Symptom: **UNUSUAL GEARBOX NOISE AND/OR VIBRATIONS**

1. **Check oil level in gearbox.**
   - *Oil leakage from gearbox. Replace damaged gasket(s) and/or oil seal(s), torque screws and refill with oil up to specified level (refer to TECHNICAL SPECIFICATIONS and GEARBOX).*

www.midwestmanuals.com
Sales@midwestmanuals.com

www.midwestmanuals.com

Symptom: **UNUSUAL GEARBOX NOISE AND/OR VIBRATIONS** (cont'd)

2. **Check bearings in the gearbox for free movement.**
   - *Bearing(s) do(es) not move freely. Replace bearing(s).*
3. **Check for knocking noise.**
   - *Tooth of gears are damaged and/or worn. Replace respective gears.*

Symptom: **GEAR INDICATION FAILS**

1. **Check contact screws on gear housing center.**
   - *Check contact screw outside for contamination and wetness. Clean contact screw and screw for wiring harness.*
   - *Contact(s) is (are) corroded and/or contact screw for wiring harness got loose. Clean contact surface and retighten contact screw(s) with recommended torque.*
   - *Wiring harness has broken cables. Replace wiring harness.*
   - *Shifting indicator switch(es) pin(s) is (are) worn and/or damaged. Replace shifting indicator switch(es).*

Symptom: **GEAR(S) IS (ARE) HARD TO SHIFT**

1. **Check shift shaft spline and/or shift forks for wear and/or damages.**
   - *Shift shaft is worn out and/or shows damaged splines. Replace shift shaft.*
   - *Shift drum track(s) and/or splines is (are) worn out or damaged. Replace shift drum and damaged part(s).*
   - *Shift fork(s) is (are) worn out and/or engagement pins are damaged. Replace shift fork(s).*
   - *Shift fork(s) is (are) worn out and/or fork(s) is (are) damaged. Replace shift fork(s).*
   - *Shift gear(s) is (are) worn out. Replace shift gear(s).*
   - *Shifting indicator switch(es) pin(s) is (are) worn out (no roundings on top of pin). Replace shifting indicator switch(es).*
2. **Check engine idle speed.**
   - *Check throttle cable and throttle adjustment.*
   - *Check bypass idle valve and connectors.*
3. **Check CVT one way clutch on drive pulley.**
   - *CVT one way clutch was not lubricated correctly. Lubricate CVT one way clutch (refer to CONTINUOUSLY VARIABLE TRANSMISSION (CVT)).*
   - *CVT one way clutch is worn out or damaged. Replace defective part(s) (refer to CONTINUOUSLY VARIABLE TRANSMISSION (CVT)).*
   - *Check if friction washer at one way clutch is worn. Replace friction washer (refer to CONTINUOUSLY VARIABLE TRANSMISSION (CVT)).*
4. **Check transmission lever and connecting rod.**
   - *Ball joint and/or ball joint nut is (are) loose. Retighten or replace the ball joint.*
5. **Check spring on shift shaft in gearbox.**
   - *Broken spring. Replace the spring (refer to GEARBOX).*
6. **Check for any mud intrusions.**
   - *CVT parts dirty. Clean all CVT parts.*

www.midwestmanuals.com
Sales@midwestmanuals.com

www.midwestmanuals.com

Symptom: **UNUSUAL GEARBOX NOISE AND/OR VIBRATIONS** (cont'd)

2. **Check bearings in the gearbox for free movement.**
   - *Bearing(s) do(es) not move freely. Replace bearing(s).*
3. **Check for knocking noise.**
   - *Tooth of gears are damaged and/or worn. Replace respective gears.*

Symptom: **GEAR INDICATION FAILS**

1. **Check contact screws on gear housing center.**
   - *Check contact screw outside for contamination and wetness. Clean contact screw and screw for wiring harness.*
   - *Contact(s) is (are) corroded and/or contact screw for wiring harness got loose. Clean contact surface and retighten contact screw(s) with recommended torque.*
   - *Wiring harness has broken cables. Replace wiring harness.*
   - *Shifting indicator switch(es) pin(s) is (are) worn and/or damaged. Replace shifting indicator switch(es).*

Symptom: **GEAR(S) IS (ARE) HARD TO SHIFT**

1. **Check shift shaft spline and/or shift forks for wear and/or damages.**
   - *Shift shaft is worn out and/or shows damaged splines. Replace shift shaft.*
   - *Shift drum track(s) and/or splines is (are) worn out or damaged. Replace shift drum and damaged part(s).*
   - *Shift fork(s) is (are) worn out and/or engagement pins are damaged. Replace shift fork(s).*
   - *Shift fork(s) is (are) worn out and/or fork(s) is (are) damaged. Replace shift fork(s).*
   - *Shift gear(s) is (are) worn out. Replace shift gear(s).*
   - *Shifting indicator switch(es) pin(s) is (are) worn out (no roundings on top of pin). Replace shifting indicator switch(es).*
2. **Check engine idle speed.**
   - *Check throttle cable and throttle adjustment.*
   - *Check bypass idle valve and connectors.*
3. **Check CVT one way clutch on drive pulley.**
   - *CVT one way clutch was not lubricated correctly. Lubricate CVT one way clutch (refer to CONTINUOUSLY VARIABLE TRANSMISSION (CVT)).*
   - *CVT one way clutch is worn out or damaged. Replace defective part(s) (refer to CONTINUOUSLY VARIABLE TRANSMISSION (CVT)).*
   - *Check if friction washer at one way clutch is worn. Replace friction washer (refer to CONTINUOUSLY VARIABLE TRANSMISSION (CVT)).*
4. **Check transmission lever and connecting rod.**
   - *Ball joint and/or ball joint nut is (are) loose. Retighten or replace the ball joint.*
5. **Check spring on shift shaft in gearbox.**
   - *Broken spring. Replace the spring (refer to GEARBOX).*
6. **Check for any mud intrusions.**
   - *CVT parts dirty. Clean all CVT parts.*

www.midwestmanuals.com
Sales@midwestmanuals.com

www.midwestmanuals.com

COUPLING UNIT

Symptom: **4 WHEEL DRIVE INDICATION FAILS**

1. **Check contact screw on gear housing right side for damage and/or wear.**
   - *Shifting indicator switch pin is worn and/or damaged. Replace shifting indicator switch (refer to GEARBOX).*
   - *Contact is corroded and/or contact screw for wiring harness got loose. Clean contact surface and retighten contact screw with recommended torque.*
   - *Wiring harness has broken cable. Replace wiring harness.*

Symptom: **4 WHEEL DRIVE DOES NOT ENGAGE OR DISENGAGE**

1. **Check actuator and/or actuator shifting fork for wear and/or damages.**
   - *Check if selector works properly. If so, check actuator.*
   - *If selector is out of specifications, check wires, connectors and/or replace selector.*
   - *Actuator shifting fork is worn out and/or damaged. Replace shifting fork of actuator.*
   - *Check function of actuator. Replace if actuator is not turning, refer to GEARBOX.*
2. **Check shifting sleeve spline and/or shifting fork for wear and/or damages.**
   - *Shifting sleeve shows damaged splines. Replace shifting sleeve (refer to GEARBOX).*
   - *Shifting fork is worn out and/or engagement pin is damaged. Replace shifting fork.*

CVT

Symptom: **UNUSUAL ACCELERATION BEHAVIOR**

1. **Check drive belt condition.**
   - *Belt is too narrow (drive belt engagement is higher in drive pulley). Replace belt if width is less than specified (refer to CONTINUOUSLY VARIABLE TRANSMISSION (CVT) and/or TECHNICAL SPECIFICATIONS).*
2. **Check lever condition on drive pulley sliding sheave and/or roller(s) on governor cup.**
   - *Lever(s) on drive pulley sliding sheave is (are) worn and/or damaged (refer to CONTINUOUSLY VARIABLE TRANSMISSION (CVT)). Replace all levers at the same time (lever kit).*
   - *Roller(s) is (are) worn and/or damaged (refer to CONTINUOUSLY VARIABLE TRANSMISSION (CVT)). Replace governor cup assembly.*
3. **Check drive/driven pulley sliding sheave for free axial movement.**
   - *Sliding sheave is stuck (refer to CONTINUOUSLY VARIABLE TRANSMISSION (CVT)). Replace damaged part(s).*
4. **Check condition of drive/driven pulley spring.**
   - *Drive pulley spring tension is too smooth and/or damaged (refer to CONTINUOUSLY VARIABLE TRANSMISSION (CVT)). Replace spring.*
   - *Driven pulley spring tension is too stiff (refer to CONTINUOUSLY VARIABLE TRANSMISSION (CVT)). Replace spring.*
5. **Check if cam of driven pulley is worn.**
   - *Replace if out of specifications; refer to CONTINUOUSLY VARIABLE TRANSMISSION (CVT).*
6. **Check condition of fixed and sliding sheaves (drive and driven pulley).**
   - *Check surface of fixed and sliding sheaves (drive and driven pulley) for grooves or other damages; refer to CONTINUOUSLY VARIABLE TRANSMISSION (CVT).*
7. **Check with B.U.D.S. at diagnostic communication port for failure.**
   - *Repair or replace defective part.*

www.midwestmanuals.com
Sales@midwestmanuals.com

www.midwestmanuals.com

Symptom: **UNUSUAL ACCELERATION BEHAVIOR** (cont'd)

8. **Check valve adjustment.**
   - *Intake and/or exhaust valves are not adjusted correctly. Adjust valves.*
9. **Check engine condition.**
   - *Low engine compression; refer to LEAK TEST in INTAKE MANIFOLD, CYLINDER HEAD AND CYLINDER.*
10. **Check ignition condition.**
    - *Faulty spark plug. Install new spark plug(s).*
11. **Check differentials operation.**
    - *Vehicle on Neutral is hard to move. Repair or replace defective part(s).*

Symptom: **ENGINE MAXIMUM RPM IS TOO HIGH AND TOP SPEED IS NOT REACHED**

1. **Check drive/driven pulley area for contamination and/or water intrusion.**
   - *CVT area is contaminated with water, dirt or oil. Clean CVT system and replace damaged part(s).*
2. **Check items 1 to 3 of *UNUSUAL ACCELERATION BEHAVIOR*.**
3. **Check drive/driven pulley spring tension.**
   - *Drive pulley spring tension is too stiff. Replace spring (recommended BRP spring).*
   - *Driven pulley spring tension is too smooth and/or damaged (refer to CONTINUOUSLY VARIABLE TRANSMISSION (CVT)). Replace spring.*

Symptom: **DRIVE PULLEY NOISE IN IDLE SPEED**

1. **Check slider shoes (drive pulley).**
   - *Worn slider shoes (increased clearance between governor cup and drive pulley sliding sheave). Replace all slider shoes at the same time (slider shoes kit).*
2. **Check driven pulley sliding mechanism (between driven pulley outer and inner sheave).**
   - *Mechanism is stuck and/or damaged. Replace driven pulley assembly.*
3. **Check roller(s) and/or levers for wear (located on sliding sheave of drive pulley).**
   - *Roller(s) on governor cup is (are) worn out and/or damaged (refer to CONTINUOUSLY VARIABLE TRANSMISSION (CVT)). Replace governor cup assembly.*
   - *Lever(s) on drive pulley sliding sheave is (are) worn out and/or damaged (refer to CONTINUOUSLY VARIABLE TRANSMISSION (CVT)). Replace all levers at the same time (lever kit).*
4. **Check drive pulley screw for torque.**
   - *Loose screw. Retighten screw with recommended torque.*
5. **Check one-way clutch condition on drive pulley sliding sheave.**
   - *Bearing(s) do(es) not move freely. Replace damaged part(s) and lubricate inside of one-way clutch (refer to CONTINUOUSLY VARIABLE TRANSMISSION (CVT)).*
   - *Spring sleeve(s) inside one-way clutch is (are) worn out. Replace both sleeves and springs and lubricate inside of one-way clutch (refer to CONTINUOUSLY VARIABLE TRANSMISSION (CVT)).*
   - *Spring(s) inside one-way clutch is (are) worn out. Replace both pins and springs and lubricate inside of one-way clutch (refer to CONTINUOUSLY VARIABLE TRANSMISSION (CVT)).*

Symptom: **DRIVE PULLEY NOISE WHEN ACCELERATING/DECELERATING**

1. **Check items 1 to 5 of *DRIVE PULLEY NOISE IN IDLE SPEED*.**
2. **Check if belt runs in dry conditions.**
   - *Drive pulley area is wet/contaminated due to water/dirt intrusion. Clean driven pulley area and/or drain water out of CVT cover.*

www.midwestmanuals.com
Sales@midwestmanuals.com

www.midwestmanuals.com

Symptom: **DRIVE PULLEY NOISE WHEN ACCELERATING/DECELERATING** (cont'd)

3. **Check drive/driven pulley screw for torque.**
   - *Loose screw on drive and/or driven pulley. Retighten screw with recommended torque.*
4. **Check cam and driven pulley fixed sheave for wear.**
   - *Cam and/or drive pulley fixed sheave out of wear limit and/or damaged. Replace damaged part(s).*
5. **Check torque gear fixed in driven pulley sliding sheave for wear.**
   - *Torque gear out of wear limit and/or damaged. Replace torque gear (refer to CONTINUOUSLY VARIABLE TRANSMISSION (CVT)).*
6. **Check for foreign particles in CVT area (stones, dirt, etc.).**
   - *Small particles damaged belt and/or pulley surface(s). Clean system and replace damaged parts (refer to CONTINUOUSLY VARIABLE TRANSMISSION (CVT)).*

Symptom: **VIBRATIONS ORIGINATING FROM DRIVE PULLEY**

1. **Check tightening torque of drive pulley screw.**
   - *Moving sliding sheave. Retighten screw.*
2. **Check fixed sheave bushings.**
   - *Excessive gap between bushings and fixed sheave shaft, thus restraining sliding sheave movements. Replace fixed sheave assembly.*
3. **Check if slider shoes are present and/or placed in correct position.**
   - *Slider shoe(s) is (are) missing and/or damaged. Replace all slider shoes at the same time (slider shoes kit).*

Symptom: **VIBRATIONS ORIGINATING FROM DRIVEN PULLEY**

1. **Check fixed and sliding sheave bushings on driven pulley.**
   - *Excessive gap between bushings and CVT shaft, thus restraining sliding sheave movements. Replace fixed and/or sliding sheave of driven pulley, polish CVT shaft area with fine emery cloth and wipe clean with a cloth.*

Symptom: **PULLEYS DO NOT DOWN/UP SHIFT PROPERLY**

1. **Check drive pulley bushings (cleanliness, wear, etc.).**
   - *Check items 1 and 2 of UNUSUAL ACCELERATION BEHAVIOR.*
   - *Bushings stick to fixed sheave pulley shaft. Clean or replace.*
   - *Spring seat sticks to sliding sheave pulley bushing. Clean system and/or replace sliding sheave pulley.*
   - *One-way clutch does not operate properly. Clean system and/or replace damaged part(s).*
2. **Check driven pulley spring tension.**
   - *Driven pulley spring tension is too weak or broken. Replace.*
   - *Driven pulley cam is worn or damaged. Replace.*

Symptom: **BELT GLAZED EXCESSIVELY OR HAVING BAKED APPEARANCE**

1. **Check if CVT air intake and/or outlet is clogged.**
   - *CVT area heats up due to contamination. Clean air intake and/or outlet from contamination.*
   - *Fans located on drive pulley fixed sheave are clogged. Clean from contamination.*
2. **Check if pulley sheaves are clean.**
   - *Oil on pulley surfaces. Clean pulley sheaves and replace belt.*
   - *Water intrusion in CVT area. Find root cause and repair. Drain water and replace belt.*

www.midwestmanuals.com
Sales@midwestmanuals.com

www.midwestmanuals.com

Symptom: **BELT WORN EXCESSIVELY IN TOP WIDTH**

1. **Check drive belt width.**
   - *Considerable wear. Replace belt if narrower than specified (refer to CONTINUOUSLY VARIABLE TRANSMISSION (CVT) or TECHNICAL SPECIFICATIONS).*
2. **Check drive belt identification number.**
   - *Wrong type of belt. Replace belt with an appropriate drive belt.*
3. **Check for localized belt wear caused by belt slippage.**
   - *Localized wear. Replace belt.*

Symptom: **BELT DISINTEGRATION**

1. **Check drive belt lifetime is exceeded.**
   - *Clean CVT system and rebuild with a new drive belt.*
2. **Check drive belt identification number.**
   - *Excessive belt speed. Using unspecified type of belt. Replace belt with proper type of belt (refer to TECHNICAL SPECIFICATIONS).*
3. **Check if pulley sheaves are clean.**
   - *Oil on pulley surfaces. Clean pulley surfaces with fine emery cloth and wipe clean using Pulley Flange Cleaner (P/N 413 711 809) and a cloth.*
   - *Drive/driven pulley sheaves are damaged through stones inside CVT area. Clean pulley surfaces with fine emery cloth, wipe clean with a cloth or replace drive/driven pulley sheaves and belt.*

Symptom: **CRACKS BETWEEN COGS**

1. **Check drive belt condition.**
   - *Considerable use, belt wearing out. Replace.*
   - *Brittle belt condition through aging. Replace belt.*

ENGINE GENERAL

Symptom: **ENGINE CRANKS BUT FAILS TO START**

1. **Check if spark plug connectors fit on spark plugs (refer to *IGNITION SYSTEM*).**
2. **Check spark plugs.**
   - *Define spark plugs (no spark) or wrong spark plug gap. Readjust gap and clean spark plugs or replace.*
3. **Check for fuel on spark plugs.**
   - *Flooded engine (spark plugs wet when removed). Activate engine drowned mode and crank engine with rags over the spark plug holes (refer to OVERVIEW in EMS SYSTEM).*
4. **Check battery voltage.**
   - *Battery is discharged and starter works not properly. Charge battery.*
5. **Check fuel level in fuel tank and fuel pressure. Ensure fuel pump was not disabled by B.U.D.S.**
   - *Low or no fuel pressure. Replace defective part(s) (refer to FUEL TANK AND FUEL PUMP).*
6. **Check fuel injectors.**
   - *Plugged or faulty injector(s). Replace defective part(s) (refer to ENGINE MANAGEMENT).*
7. **Check idle bypass valve.**
   - *Stuck or defective. Refer to ENGINE MANAGEMENT.*

www.midwestmanuals.com
Sales@midwestmanuals.com

www.midwestmanuals.com

Symptom: **ENGINE CRANKS BUT FAILS TO START** (cont'd)

8. **Check encoder wheel.**
   - *Bent tooth. Refer to MAGNETO SYSTEM.*
9. **Check engine compression.**
   - *Insufficient engine compression. Replace defective part(s) (refer to LEAK TEST in INTAKE MANIFOLD, CYLINDER HEAD AND CYLINDER).*
10. **Check fault codes in B.U.D.S system.**
    - *Check if electrical actuator(s) is/are defective. Replace defective part(s) (refer to ENGINE MANAGEMENT).*

Symptom: **ENGINE DOES NOT START**

1. **Electrical problem.**
   - *Determine if the electrical system works correctly (fuse(s), battery, wiring harness, etc.). Refer to IGNITION SYSTEM.*
2. **Problem with fuel system (carburetor, fuel pump, hoses, etc.).**
   - *Clean, inspect, repair or replace defective parts. Refer to FUEL SYSTEM.*
3. **Check engine compression.**
   - *Insufficient engine compression. Replace defective parts.*
   - *Valve seat worn and/or damaged. Repair by performing valve guide procedure (refer to INTAKE MANIFOLD, CYLINDER HEAD AND CYLINDER). Readjust valve clearance.*
4. **Internal engine problem.**
   - *Overhaul engine to find defective parts. refer to the appropriate section in ENGINE.*

Symptom: **ENGINE HARD TO START**

1. **Check idle bypass valve.**
   - *Stuck or defective. Refer to ENGINE MANAGEMENT.*
2. **Check closed throttle and idle actuator with B.U.D.S.**
   - *Wrong TPS zero setting/idle bypass valve reset. Refer to ENGINE MANAGEMENT.*
3. **Check throttle cable adjustment.**
   - *Wrong adjustment (likely too tight). Refer to ENGINE MANAGEMENT.*
4. **Check engine compression.**
   - *Insufficient engine compression. Replace defective part(s) (refer to LEAK TEST in INTAKE MANIFOLD, CYLINDER HEAD AND CYLINDER).*
5. **Verify spark plug condition.**
   - *Defective, improperly set, worn out, fouled. Identify source of problem and correct. Replace spark plug.*
6. **Check fuel level in fuel tank and fuel pressure.**
   - *Low or no fuel pressure. Replace defective part(s) (refer to FUEL TANK AND FUEL PUMP).*
7. **Check CAPS (camshaft position sensor).**
   - *Defective sensor/wiring. Refer to ENGINE MANAGEMENT.*

Symptom: **ENGINE SUDDENLY TURNS OFF**

1. **Perform engine leak test. Refer to *INTAKE MANIFOLD, CYLINDER HEAD AND CYLINDER.***
   - *Damaged head gasket and/or seal and/or leaking inlet/exhaust valve(s). Replace and/or repair defective parts.*

www.midwestmanuals.com
Sales@midwestmanuals.com

www.midwestmanuals.com

Symptom: **ENGINE SUDDENLY TURNS OFF** (cont'd)

2. **Check spark plugs condition and/or gap.**
   - *Fouled spark plugs or wrong spark plug gap. Readjust gap and clean spark plugs or replace.*
3. **Piston seizure.**
   - *Spark plugs heat range is too hot. Install spark plugs with appropriate heat range (refer to TECHNICAL SPECIFICATIONS).*
   - *Compression ratio is too high. Install genuine parts.*
   - *Poor oil quality. Use recommended oil.*
   - *Leaks at air intake manifold (engine gets too lean). Retighten screws or replace air intake manifold gasket.*
   - *Snow/water intrusion through intake system into combustion chamber. Clean intake system and replace defective part(s).*
4. **Melted and/or perforated piston dome; melted section at ring end gap.**
   - *Spark plugs heat range is too hot. Install recommended spark plugs (refer to TECHNICAL SPECIFICATIONS).*
   - *Coolant less than recommended level (engine gets too hot). Repair cooling circuit and/or refill with recommended liquid.*
   - *Poor quality and/or wrong fuel. Clean from contamination and use appropriate fuel (refer to TECHNICAL SPECIFICATIONS).*
5. **Piston color is dark due to seizure on intake and exhaust sides.**
   - *Cooling system leaks and lowers coolant level. Tighten clamps or replace defective parts. Add antifreeze in cooling system until appropriate level is reached. Replace damaged parts.*
6. **Cracked or broken piston.**
   - *Cracked or broken piston due to excessive piston/cylinder clearance or engine overreving. Replace piston. Check piston/cylinder clearance (refer to INTAKE MANIFOLD, CYLINDER HEAD AND CYLINDER).*
7. **Check piston rings and cylinder surface for grooves.**
   - *Poor oil quality. Use recommended oil.*
   - *Contamination through engine intake. Replace defective part(s) and use new air filter.*
8. **Check crankshaft, rocker arms movement.**
   - *Oil pump failure due to lack of oil. Repair and replace defective parts and use recommended oil.*
   - *Oil contamination due to clogged oil filter/oil strainer. Replace oil and oil filter at the same time, replace defective part(s) (refer to LUBRICATION SYSTEM).*
9. **Check valve springs exhaust/intake.**
   - *Broken valve spring damages the cylinder head, valve(s), rocker arm(s), piston, piston rings and connecting rod. Replace defective part(s).*
10. **Check if fuel supply is sufficient.**
    - *Low fuel level.*
    - *Clogged fuel filter or fuel injector filter.*
    - *Fuel line is contaminated and/or bent. Clean and/or replace defective part(s).*
11. **Check fault codes in B.U.D.S. system.**
    - *Check if electrical actuator(s) is/are defective. Replace defective part(s) (refer to ENGINE MANAGEMENT).*

Symptom: **ENGINE BACKFIRES**

1. **Check spark plugs.**
   - *Carbon accumulation caused by defective spark plugs. Replace spark plugs.*

www.midwestmanuals.com
Sales@midwestmanuals.com

www.midwestmanuals.com

Symptom: **ENGINE BACKFIRES** (cont'd)

2. **Check leakage on intake manifold.**
   - *Air leak on intake system. Retighten screws and/or replace intake manifold gasket.*
3. **Check exhaust air leaking.**
   - *Exhaust gasket is leaking. Retighten screws and/or replace exhaust gasket.*
4. **Check intake valve(s) for leaking.**
   - *Intake valve(s) is (are) leaking. Repair or replace valve(s).*
5. **Check if fuel supply is sufficient.**
   - *Fuel line is contaminated and/or bent (engine gets lean). Clean and/or replace defective part(s).*
6. **Check engine ground.**
   - *Poor engine ground. Clean.*
7. **Check fault codes in B.U.D.S. system.**
   - *Check if electrical actuator(s) is/are defective. Replace defective part(s) (refer to ENGINE MANAGEMENT).*

Symptom: **ENGINE DOES NOT OFFER MAXIMUM POWER AND/OR DOES NOT REACH MAXIMUM OPERATING RPM**

1. **Check spark plugs condition and/or gap.**
   - *Fouled spark plugs or wrong spark plug gap. Readjust gap and clean spark plugs or replace.*
2. **Check spark plugs type.**
   - *Improper spark plugs heat range. Install recommended spark plugs (refer to TECHNICAL SPECIFICATIONS).*
3. **Perform engine leak test. Refer to *LEAK TEST* procedure in *INTAKE MANIFOLD, CYLINDER HEAD AND CYLINDER*.**
   - *Damaged head gasket and/or seal and/or leaking intake/exhaust valve(s). Replace and/or repair defective parts.*
4. **Check for water in fuel (wrong fuel).**
   - *There is water in fuel or wrong fuel. Drain fuel system, search for leakage and refill it with appropriate fuel.*
5. **Check engine compression.**
   - *Worn piston(s) and/or piston ring(s). Replace defective part(s) (refer to INTAKE MANIFOLD, CYLINDER HEAD AND CYLINDER).*
6. **Check fuel pressure.**
   - *Low fuel pressure. Perform fuel pressure test (refer to FUEL SYSTEM).*
7. **Check air intake system.**
   - *Air filter is clogged due to contamination. Replace air filter.*
8. **Check if EMS (engine management system) is in limp home mode. Check fault codes in B.U.D.S system.**
   - *Check if electrical actuator(s) is/are defective. Replace defective part(s) (refer to ENGINE MANAGEMENT).*
9. **Check drive belt.**
   - *Worn. Replace belt if its width is less than specified (refer to CONTINUOUSLY VARIABLE TRANSMISSION (CVT)).*

Symptom: **HIGH ENGINE OPERATING TEMPERATURE**

1. **Check if cooling system shows any failure (see *COOLING SYSTEM*).**
   - *System is leaking. Repair and/or replace damaged part(s).*

www.midwestmanuals.com
Sales@midwestmanuals.com

www.midwestmanuals.com

Symptom: **HIGH ENGINE OPERATING TEMPERATURE** (cont'd)

2. **Check function of lubrication system (see *LUBRICATION SYSTEM*).**
   - *Lubrication is not working properly. Repair and/or replace damaged part(s).*
3. **Check condition and heat range of spark plugs.**
   - *Melted spark plug tip or inadequate heat range. Replace.*
4. **Check air leakage on engine intake.**
   - *Leakage causes overheating. Replace/repair damaged part(s).*
5. **Check air inlet and outlet of the CVT cover.**
   - *Air circulation is clogged (overheating). Clean air circulation from contamination.*
   - *Drive belt worn and/or damaged. Replace belt with an appropriate drive belt (refer to TECHNICAL SPECIFICATIONS).*



sales@midwestmanuals.com
www.midwestmanuals.com

www.midwestmanuals.com
Sales@midwestmanuals.com

www.midwestmanuals.com

ENGINE REMOVAL AND INSTALLATION

SERVICE TOOLS

Description	Part Number	Page
engine lifting tool	529 036 022	31

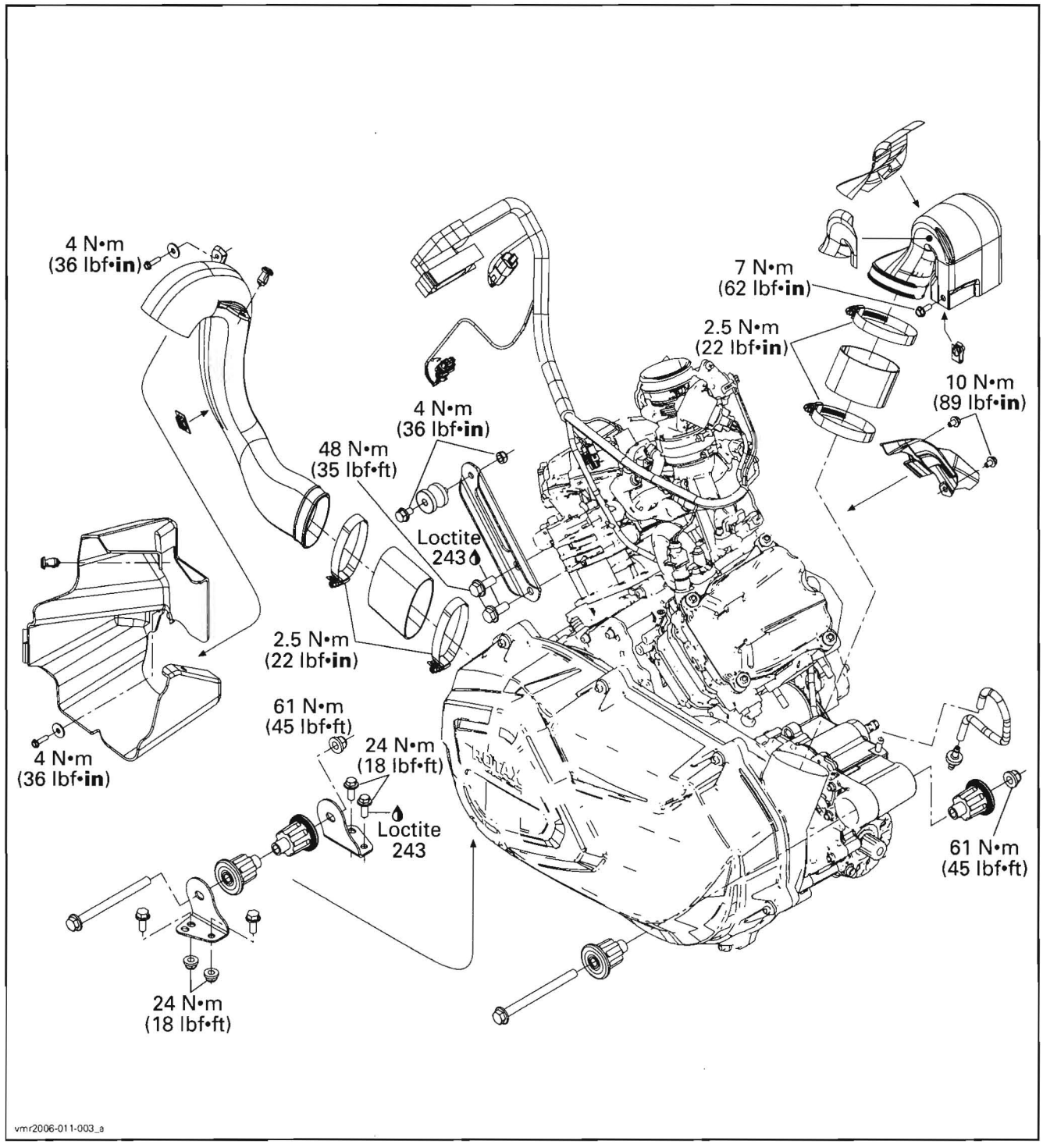

www.midwestmanuals.com
Sales@midwestmanuals.com

www.midwestmanuals.com

GENERAL

⚠ WARNING

To avoid potential burns, let engine and exhaust system cool down before servicing.

During assembly/installation, use the torque values and service products as in the exploded view.

Clean threads before applying a threadlocker. Refer to *SELF-LOCKING FASTENERS* and *LOCTITE APPLICATION* at the beginning of this manual for complete procedure.

⚠ WARNING

Torque wrench tightening specifications must strictly be adhered to.
Locking devices (e.g.: locking tabs, elastic stop nuts, self-locking fasteners, cotter pin, etc.) must be installed or replaced with new one where specified. If the efficiency of a locking device is impaired, it must be renewed.

PROCEDURES

ENGINE REMOVAL

Vehicle and Engine Preparation

Place vehicle on a workstation that will have access to an engine-lifting hoist. Then start with initial preparation of vehicle by doing the following.

Select 4WD position then place transmission lever to PARK.

Using B.U.D.S., remove fuel pressure in the fuel system. Refer to *ENGINE MANAGEMENT*.

Disconnect the BLACK (-) cable from battery, then the RED (+) cable.

⚠ WARNING

Always disconnect battery cables exactly in the specified order, the BLACK (-) cable first. It is recommended to disconnect electrical connections prior to disconnecting fuel lines.

Drain oil and coolant from engine.

NOTE: Drain engine oil only if engine overhaul is necessary. To work on gearbox the engine removal is necessary but not engine oil drain.

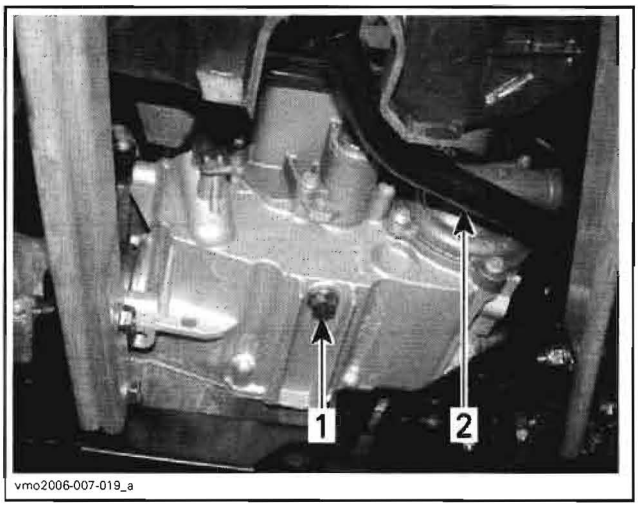

1. *Oil drain plug*
2. *Brake pedal*

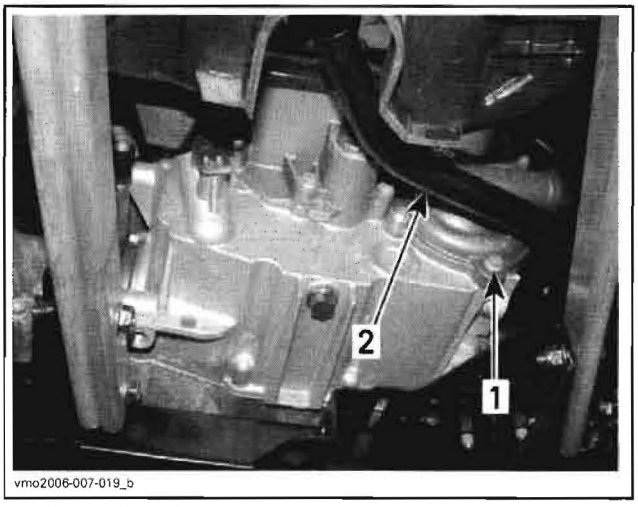

1. *Cooling drain plug*
2. *Brake pedal*

Remove:
- seat
- both side panels. Refer to *BODY*.
- both footrests. Refer to *BODY*.
- central panel. Refer to *BODY*.
- air filter housing cover. Refer to *AIR INTAKE SYSTEM*.

www.midwestmanuals.com
Sales@midwestmanuals.com

www.midwestmanuals.com

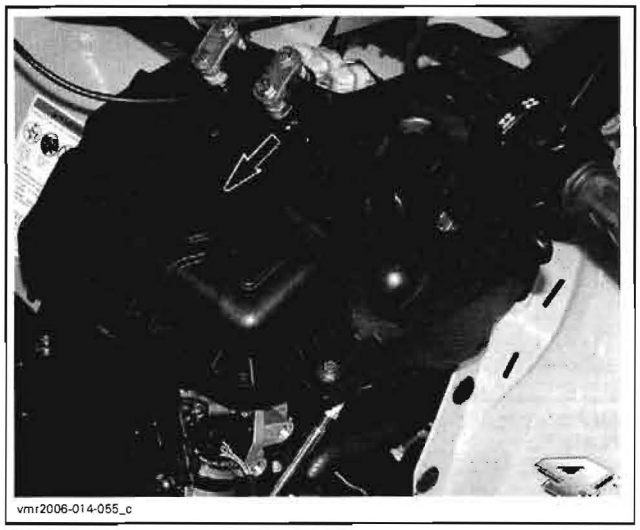
vmr2006-014-055_c

On Left Side of Vehicle, Remove the Following Parts:

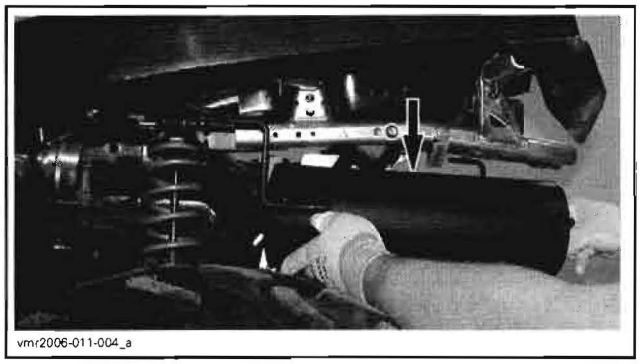
vmr2006-011-004_a

MUFFLER — OUTLANDER SHOWN

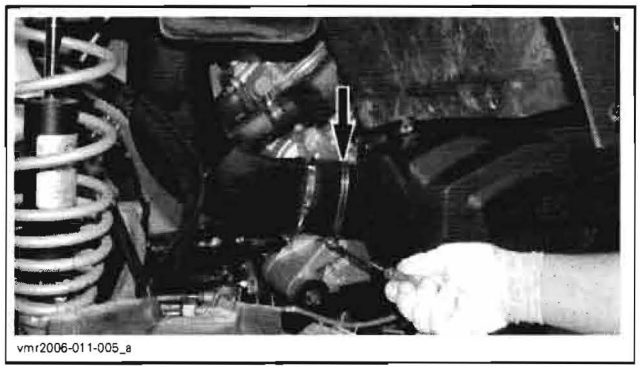
vmr2006-011-005_a

CVT INLET HOSE CLAMP

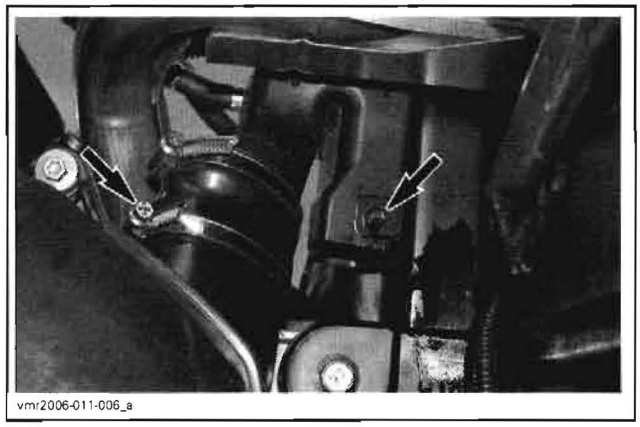
vmr2006-011-006_a

CVT OUTLET HOSE (UNSCREW BOTTOM CLAMP AND BOLT)

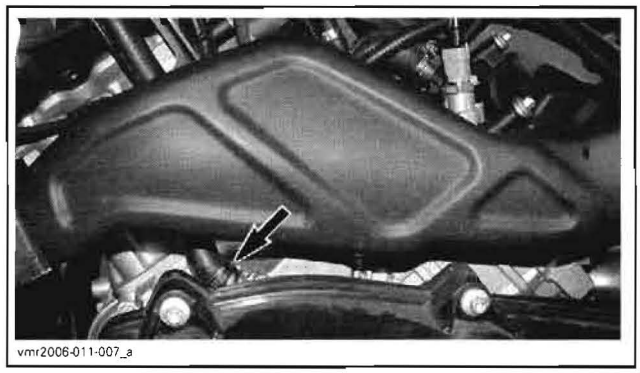
vmr2006-011-007_a

CRANKCASE VENT TUBE FROM ENGINE

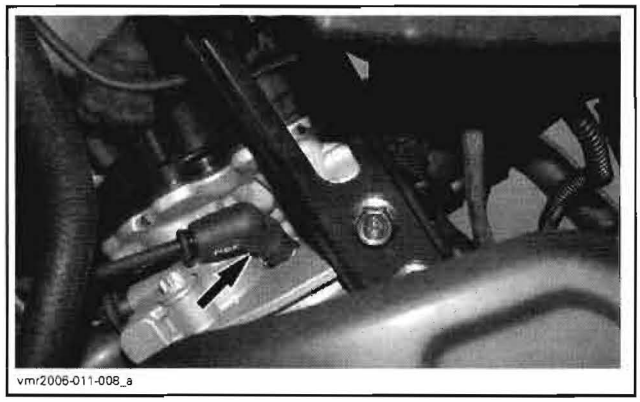
vmr2006-011-008_a

FRONT SPARK PLUG CABLE

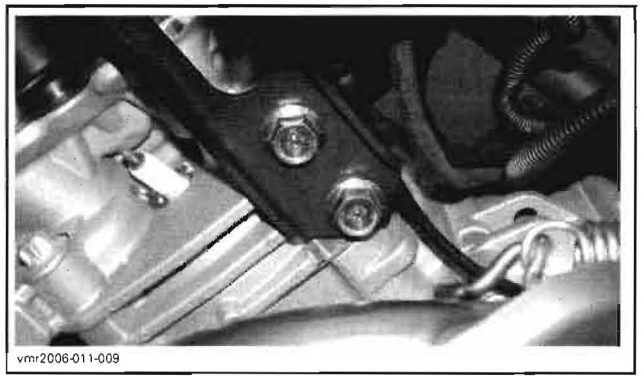
vmr2006-011-009

LOWER BOLTS FROM UPPER ENGINE SUPPORT

www.midwestmanuals.com
Sales@midwestmanuals.com

www.midwestmanuals.com

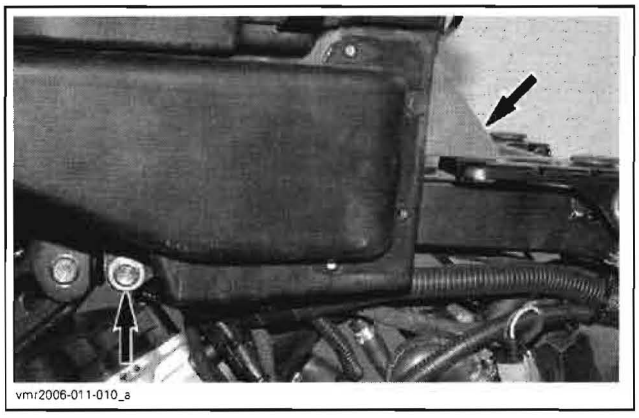
vmr2006-011-010_a

BOLTS RETAINING AIR FILTER HOUSING

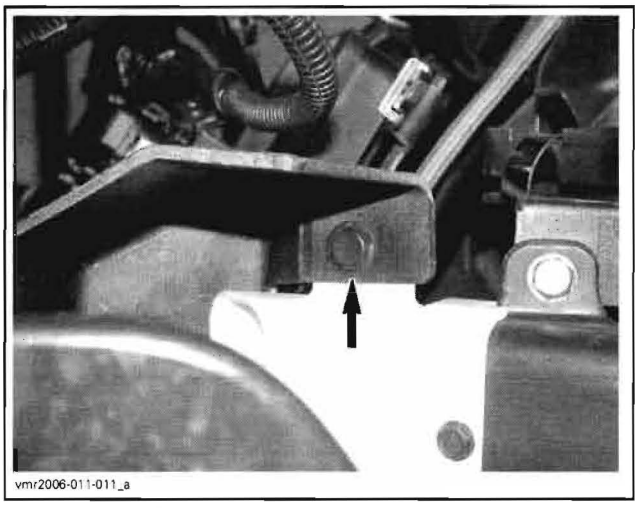
vmr2006-011-011_a

DART HOLDING AIR INTAKE INLET

On right side of vehicle, remove or disconnect the following:

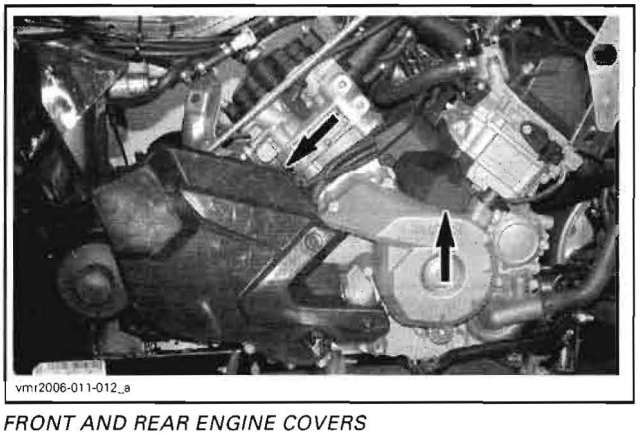
vmr2006-011-012_a

FRONT AND REAR ENGINE COVERS

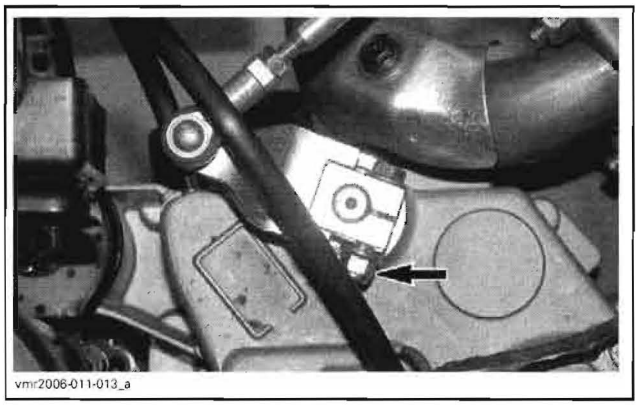
vmr2006-011-013_a

SHIFTING PLATE (UNSCREW BOLT TO REMOVE SHIFTING PLATE)

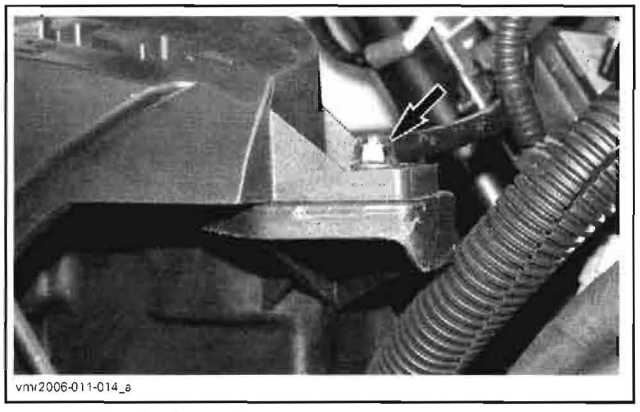
vmr2006-011-014_a

AIR FILTER HOUSING BOLT

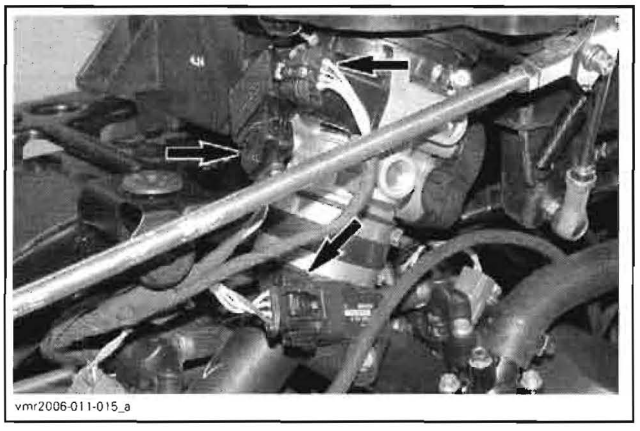
vmr2006-011-015_a

CONNECTORS FROM THROTTLE BODY AND INTAKE MANIFOLD

www.midwestmanuals.com
Sales@midwestmanuals.com

www.midwestmanuals.com

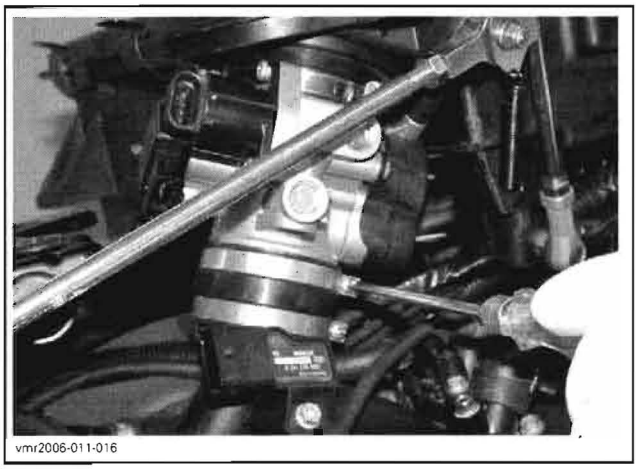
vmr2006-011-016

UPPER THROTTLE BODY CLAMP


vmr2006-011-017

AIR FILTER HOUSING AND PLACE IT ON FRONT RACK (ON RENEGADE MODELS, REMOVE IT COMPLETELY)

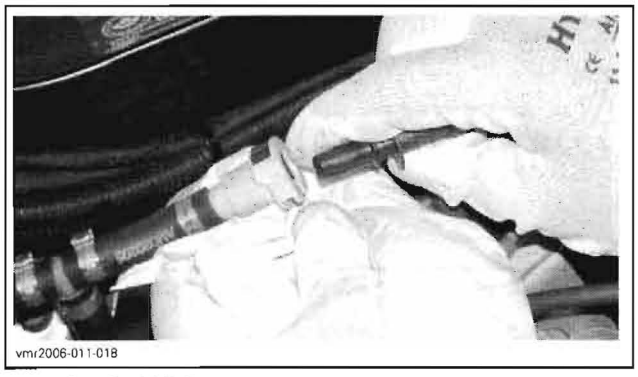
vmr2006-011-018

FUEL SUPPLY LINE

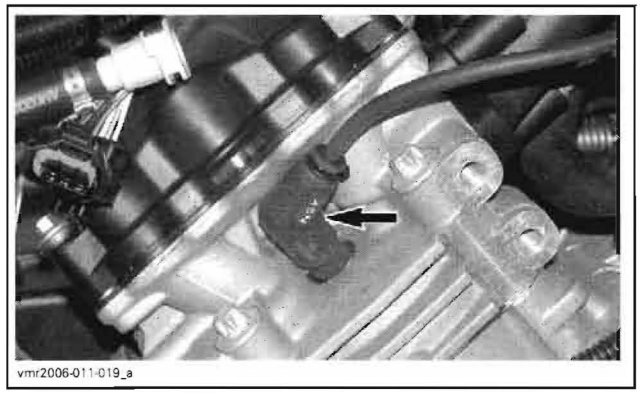
vmr2006-011-019_a

THE OTHER SPARK PLUG CABLE

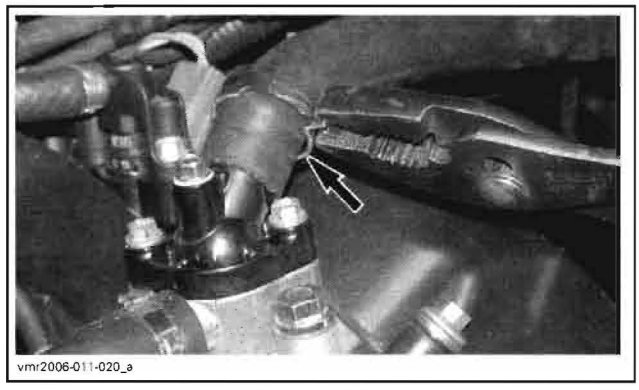
vmr2006-011-020_a

OUTLET ENGINE COOLANT HOSE


vmr2006-011-021_a

FUEL INJECTOR CONNECTORS


vmr2006-011-022_a

INTAKE MANIFOLD

www.midwestmanuals.com
Sales@midwestmanuals.com

www.midwestmanuals.com

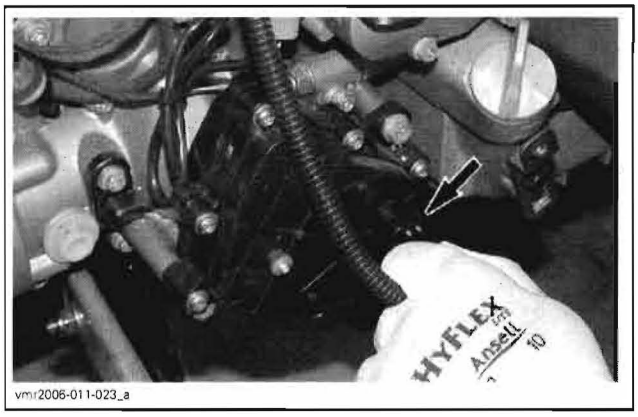

vmr2006-011-023_a

COUPLING UNIT CONNECTOR

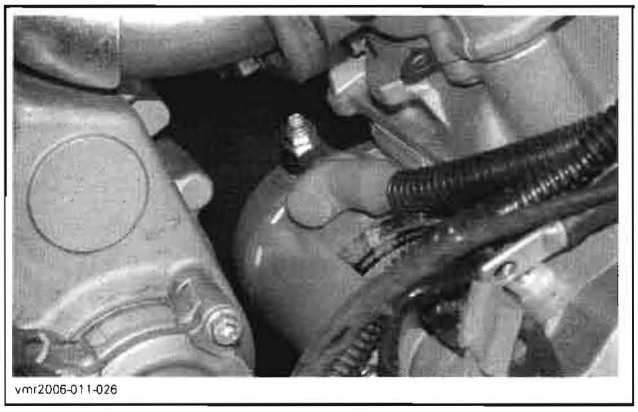
vmr2006-011-026

STARTER CABLE

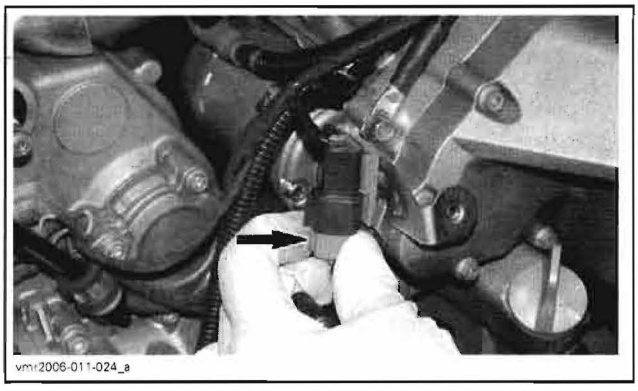
vmr2006-011-024_a

2WD/4WD SWITCH CONNECTOR THEN REMOVE HOUSING FROM BRACKET

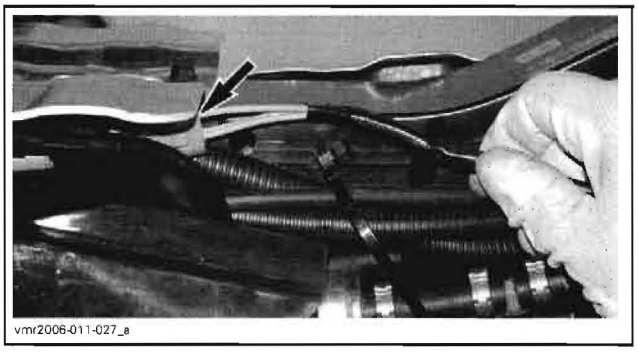
vmr2006-011-027_a

MAGNETO CONNECTOR

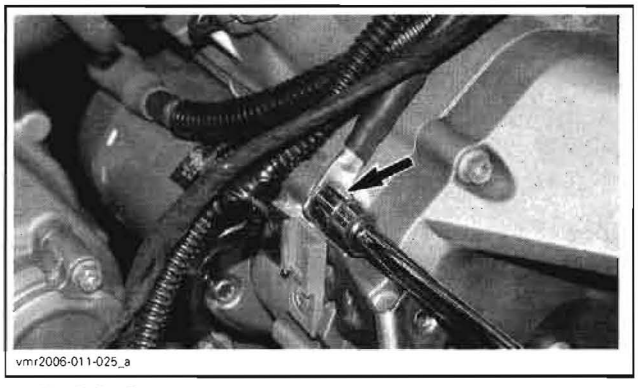
vmr2006-011-025_a

ENGINE GROUND

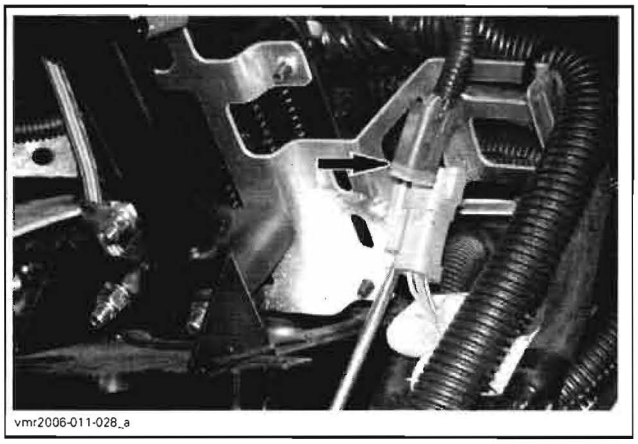
vmr2006-011-028_a

B.U.D.S. CONNECTOR THEN REMOVE HOUSING FROM BRACKET

www.midwestmanuals.com
Sales@midwestmanuals.com

www.midwestmanuals.com

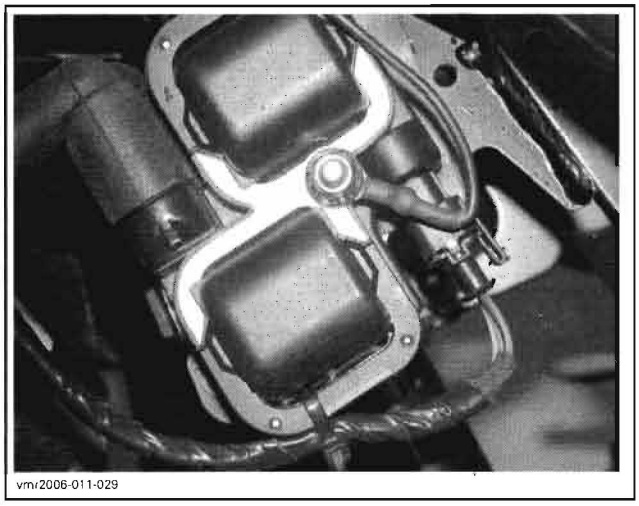
vmr2006-011-029

IGNITION COIL CONNECTOR THEN CUT THE LOCKING TIE

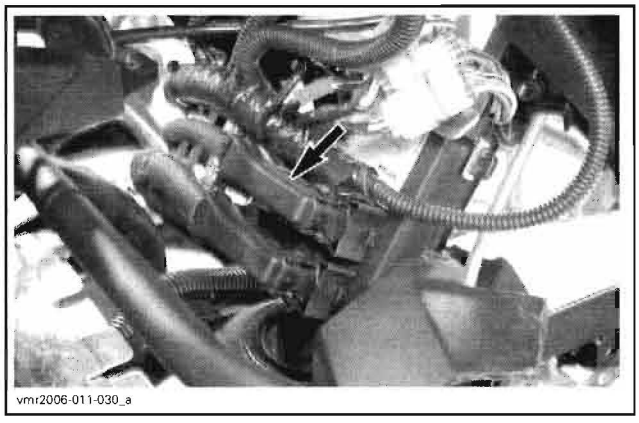
vmr2006-011-030_a

CONNECTOR "A" FROM ECM

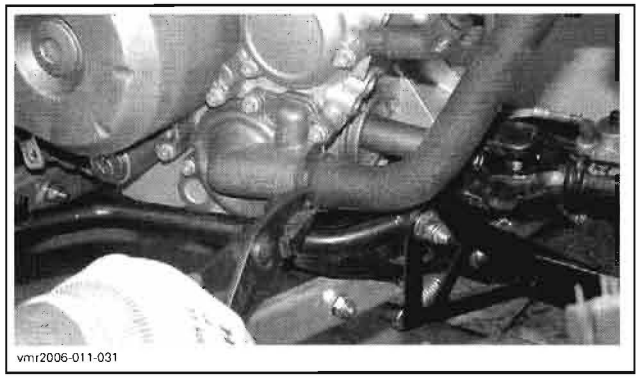
vmr2006-011-031

INLET ENGINE COOLANT HOSE


vmr2006-011-032

FRONT PROPELLER BOLT

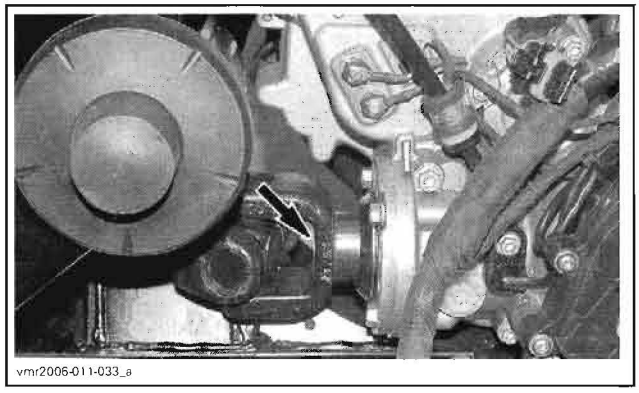
vmr2006-011-033_a

REAR PROPELLER BOLT

Lifting Engine

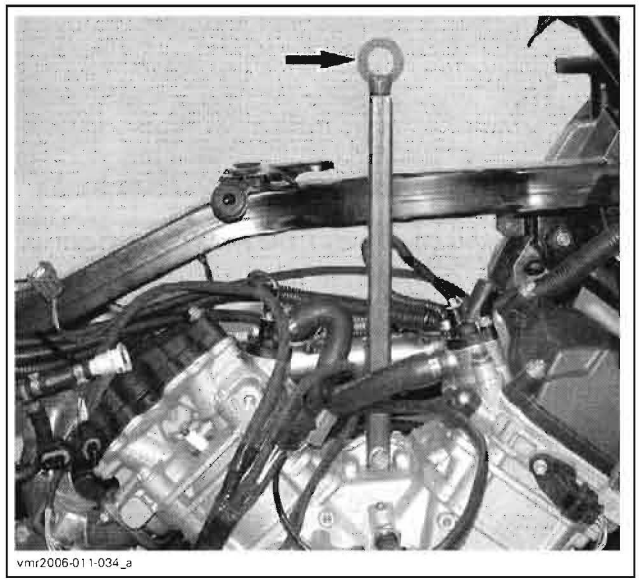
vmr2006-011-034_a

INSTALL THE ENGINE LIFTING TOOL (P/N 529 036 022)

www.midwestmanuals.com
Sales@midwestmanuals.com

www.midwestmanuals.com

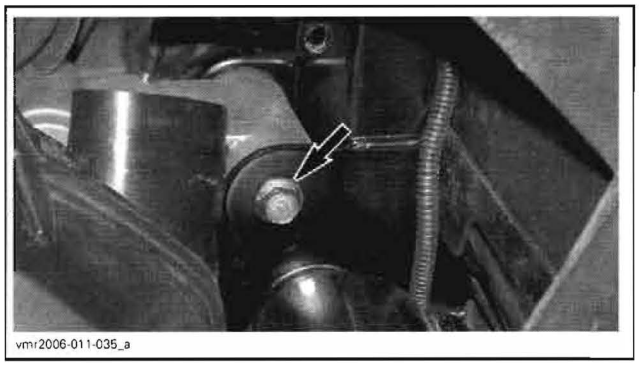

REMOVE THE REAR ENGINE MOUNTING BOLT

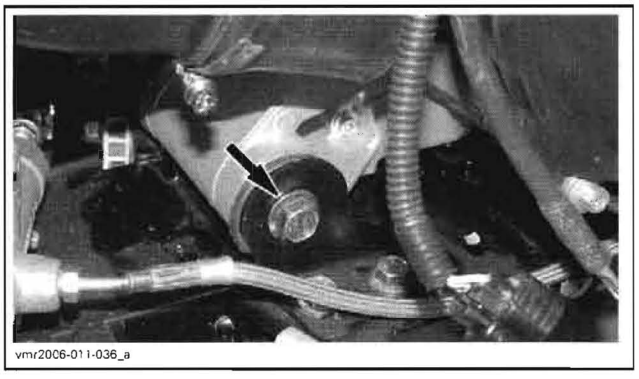

THEN THE FRONT ENGINE MOUNTING BOLT

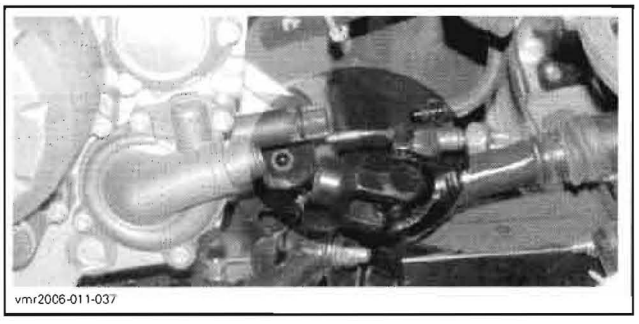

LIFT ENGINE AND DISCONNECT THE FRONT PROPELLER SHAFT FROM ENGINE

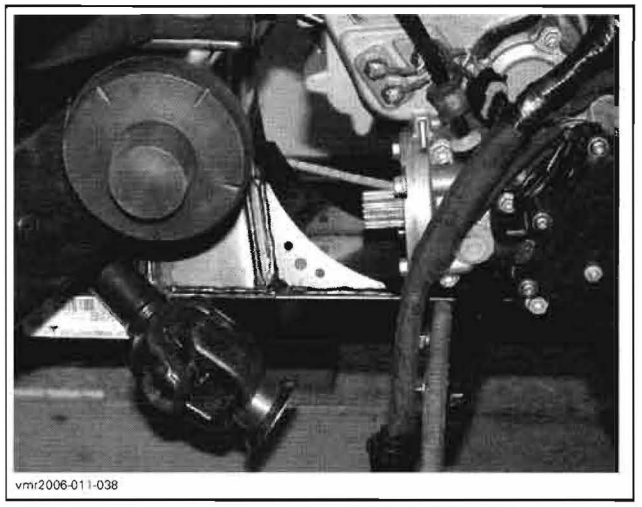

MOVE ENGINE FORWARD AND DISCONNECT REAR PROPELLER SHAFT

Lift engine to clear mounting brackets.

Turn engine 90°, cylinder head towards right side of vehicle.

Remove engine from vehicle.

ENGINE INSTALLATION

The installation is the reverse of the removal procedure. However, pay attention to the following.

NOTE: Prior to install engine, inspect condition of engine mounts.

Install the rear engine mounting bolt. Do not torque yet.

Install the rear propeller shaft onto engine output shaft.

Connect the front propeller shaft to engine output shaft while lowering engine.

Install front engine mounting bolt then torque all mounting bolts.

Install and connect all other removed parts.

Final Assembly Procedure

Make sure coolant and oil drain plugs are reinstalled and tight.

Fill cooling system. Refer to *COOLING SYSTEM.*

Fill engine with the recommended oil and quantity. Refer to *LUBRICATION.*

Reconnect battery.

⚠ WARNING

Connect RED (+) cable then BLACK (-) cable. Always connect RED (+) cable in first.

Start engine and let it reach its operating temperature.

www.midwestmanuals.com
Sales@midwestmanuals.com

www.midwestmanuals.com

Stop engine and check coolant and oil levels. Refill as necessary.

Test drive vehicle to confirm proper operation.

ENGINE MOUNT REPLACEMENT

NOTE: Use the same procedure for the front and rear engine mounts.

Removal

Insert a punch in any engine mount bushing and push the other bushing out.

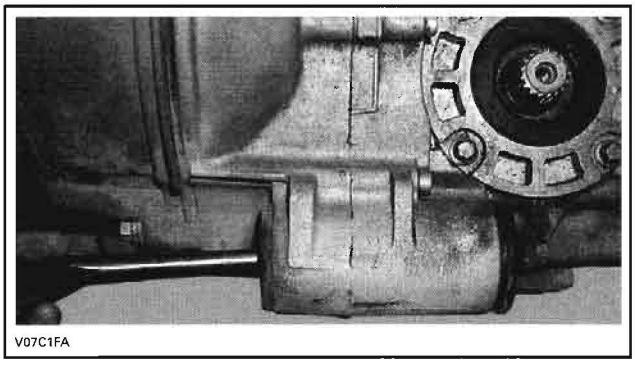

V07C1FA

TYPICAL

Use punch from the other side to remove the remaining bushing.

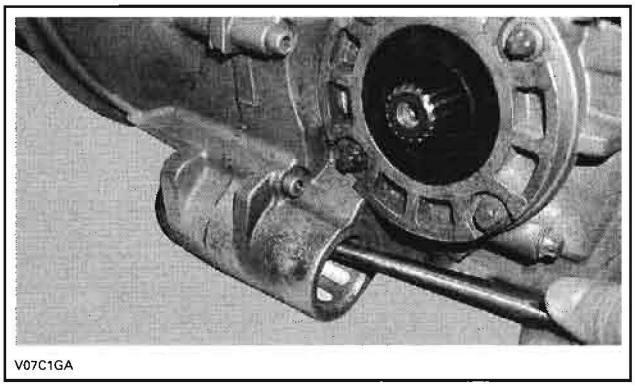

V07C1GA

TYPICAL

Installation

The installation is the reverse of the removal procedure.

www.midwestmanuals.com
Sales@midwestmanuals.com

www.midwestmanuals.com



sales@midwestmanuals.com
www.midwestmanuals.com

www.midwestmanuals.com
Sales@midwestmanuals.com

www.midwestmanuals.com

AIR INTAKE SYSTEM

SERVICE PRODUCTS

Description	Part Number	Page
air filter cleaning solution	219 700 341	37
Loctite 5910	293 800 081	39

www.midwestmanuals.com
Sales@midwestmanuals.com

www.midwestmanuals.com

AIR FILTER HOUSING

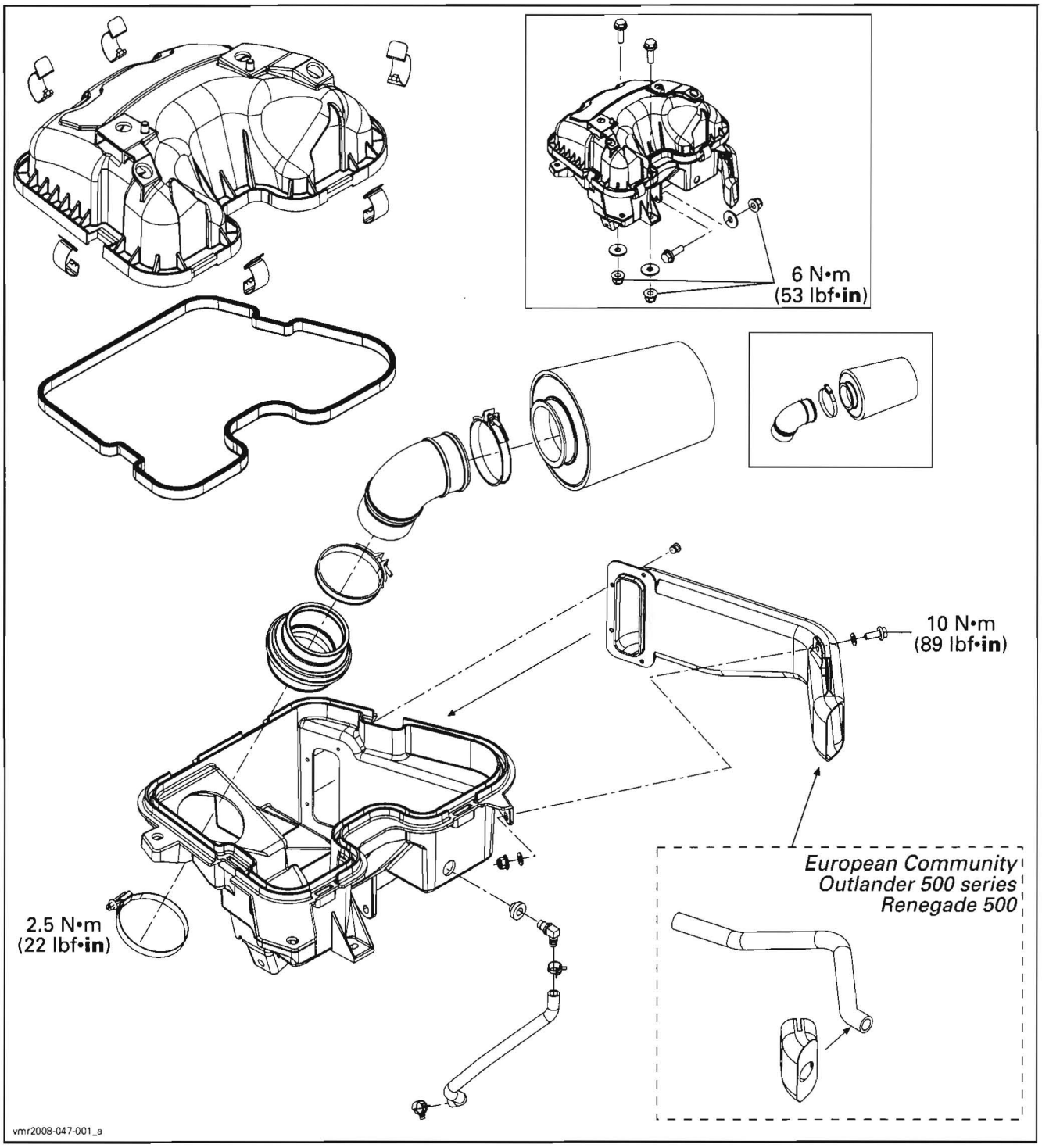

www.midwestmanuals.com
Sales@midwestmanuals.com

www.midwestmanuals.com

GENERAL

During assembly/installation, use the torque values and service products as in the exploded views.

Clean threads before applying a threadlocker. Refer to *SELF-LOCKING FASTENERS* and *LOCTITE APPLICATION* at the beginning of this manual for complete procedure.

⚠ WARNING

Torque wrench tightening specifications must strictly be adhered to.
Locking devices (e.g.: locking tabs, elastic stop nuts, cotter pin, etc.) must be replaced with new ones.

PROCEDURES

AIR FILTER

Air Filter Removal

CAUTION: Never remove or modify any component in the air filter housing. The engine management system is calibrated to operate specifically with these components. Otherwise, engine performance degradation or damage can occur.

Remove seat, side panels, central panel and dashboard. Refer to *BODY*.

Release clamps and remove air filter housing cover.

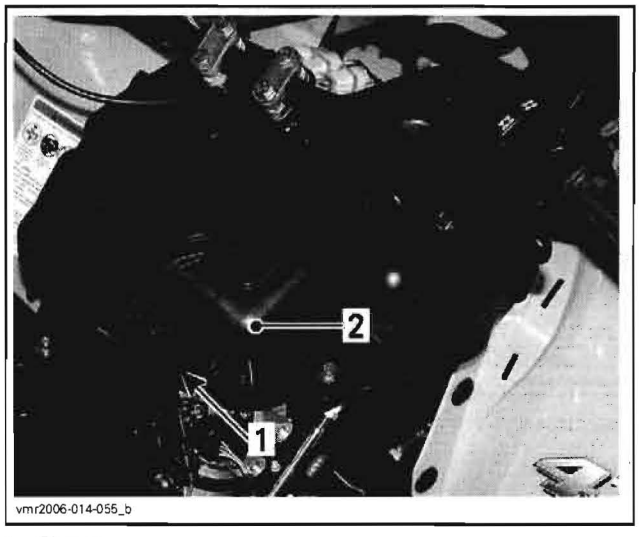

1. *Clamps*
2. *Cover*

Loosen clamp and remove air filter.

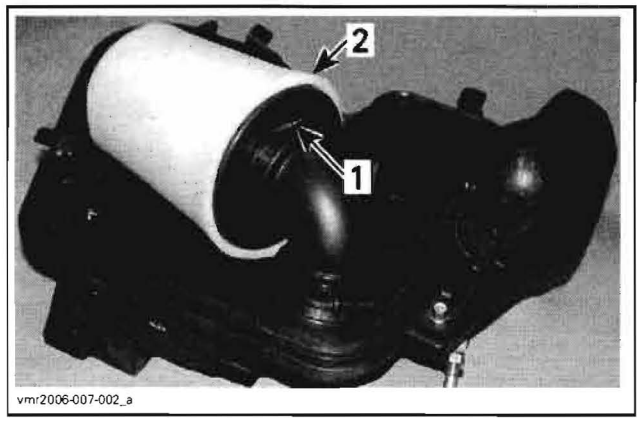

1. *Clamp*
2. *Air filter*

NOTE: If vehicle is used in dusty area, inspect more frequently than specified in *MAINTENANCE CHART*.

If liquid/deposits are found, squeeze and dry the foam filter. Replace filter element if damaged.

CAUTION: Do not start engine if liquid or deposit are found. If there is oil in the air filter housing, check engine oil level. Oil level may be too high.

Pour air filter cleaning solution (P/N 219 700 341) or an equivalent into a bucket. Put the foam filter in to soak. Do not wash filter element.

While filter soaks, clean inside of air filter housing.

Rinse foam filter with warm water and let it dry completely.

Blow low pressure compressed air on filter element to clean it.

Air Filter Installation

Properly reinstall removed parts in the reverse order of their removal.

AIR FILTER HOUSING

Air Filter Housing Removal

Remove seat, side panels, central panel and dashboard. Refer to *BODY*.

Set shifter lever to PARK.

Disconnect ball joint from shifting plate.

NOTE: If you prefer to remove the shifting plate from transmission shaft, refer to *SHIFTER* section for the procedure.

www.midwestmanuals.com
Sales@midwestmanuals.com

www.midwestmanuals.com

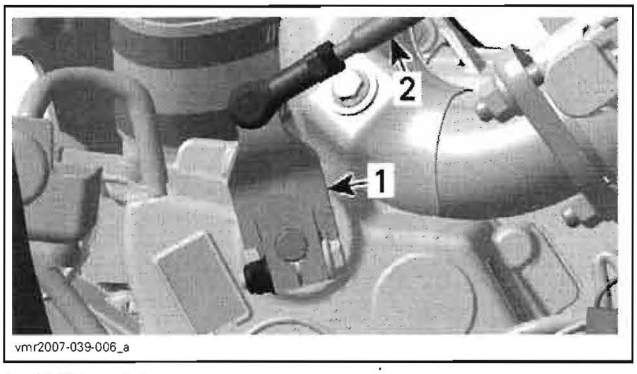

1. *Shifting plate*
2. *Shifter link rod*

Detach throttle cable from shifter panel.

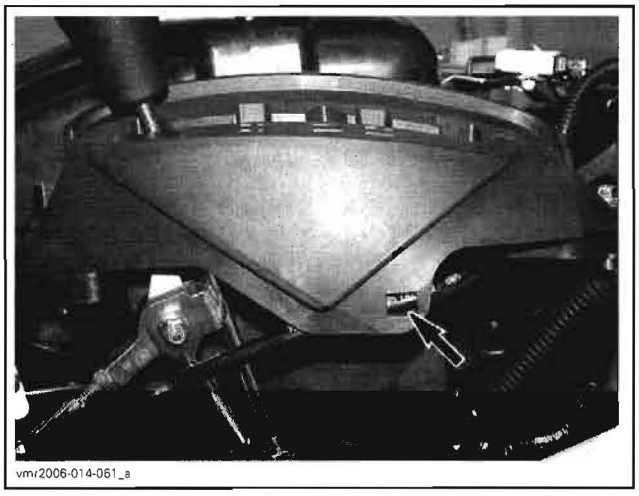

Remove retaining fasteners.

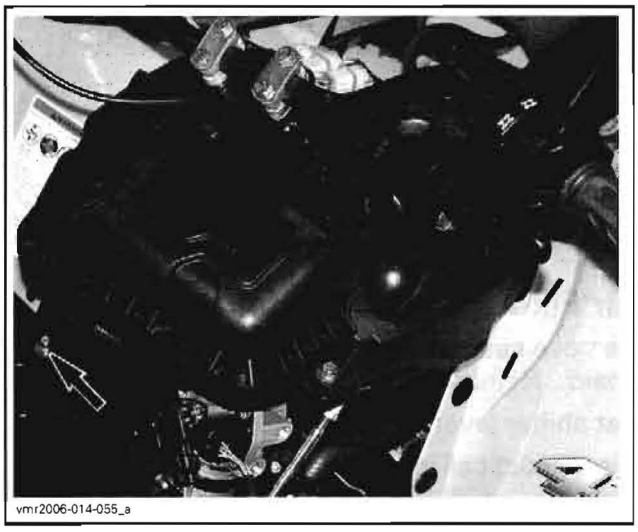

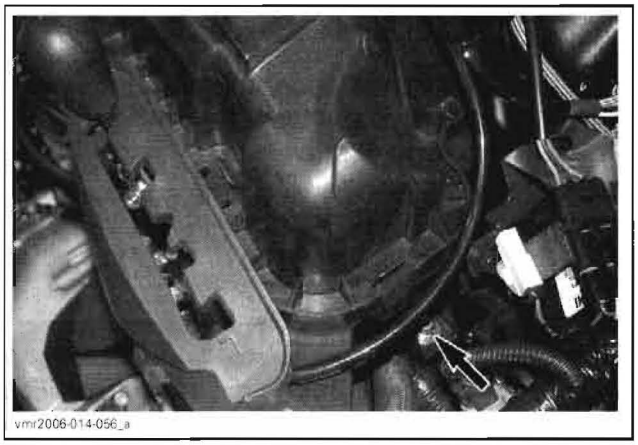

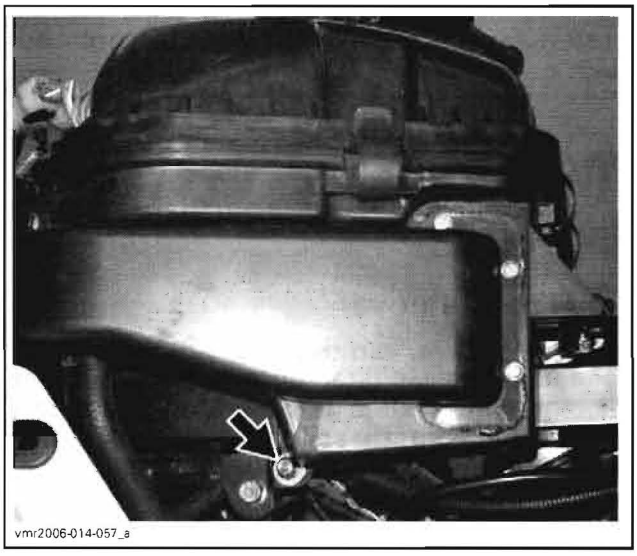

Remove dart.

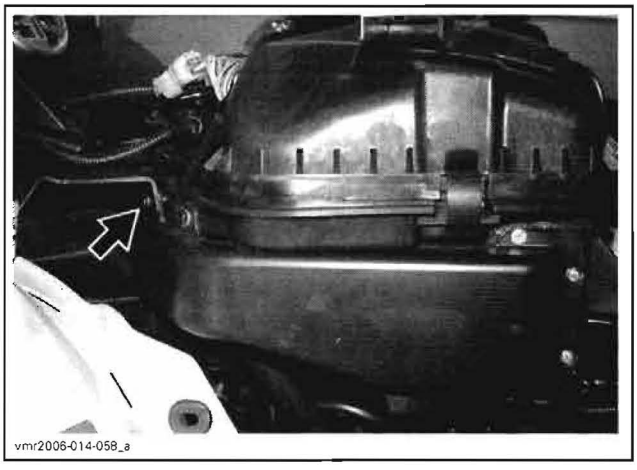

Disconnect vent tube.

www.midwestmanuals.com
Sales@midwestmanuals.com

www.midwestmanuals.com

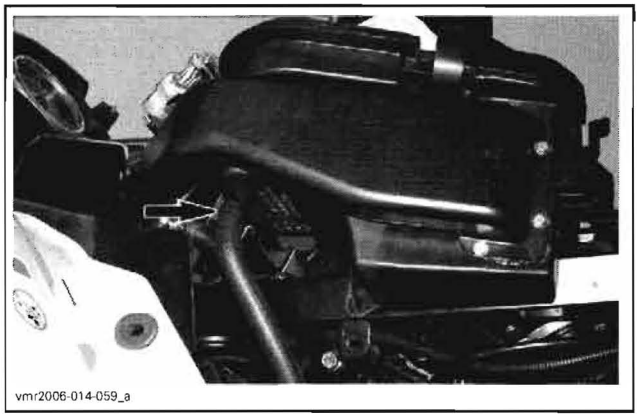

Pull air filter housing out.

Air Filter Housing Installation

For installation, reverse the removal procedure but pay attention to the following.

If the baffle is removed, reseal it with Loctite 5910 (P/N 293 800 081) and replace rivets by screws (M4 x 12 mm) and elastic stop nuts.

Set shifter lever to PARK then reinstall shifter to transmission shaft. Check its operation and adjust as necessary. Refer to *GEARBOX*.

Secure throttle cable to shifter panel.

Gently pull throttle cable toward rear to have a gap between cable and shifter mechanism.

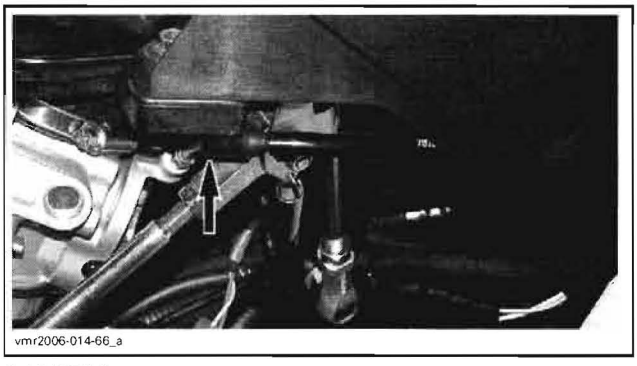

GAP HERE

⚠ WARNING

Ensure shifter mechanism does not touch throttle cable. Depress throttle lever several times to ensure it properly returns.

RESTRICTOR

Outlander 500 and Renegade 500 (European Community Models)

Restrictor Removal

The restrictor is installed on the inlet tube of the air filter housing.

Remove the water deflector.

Pull the restrictor.

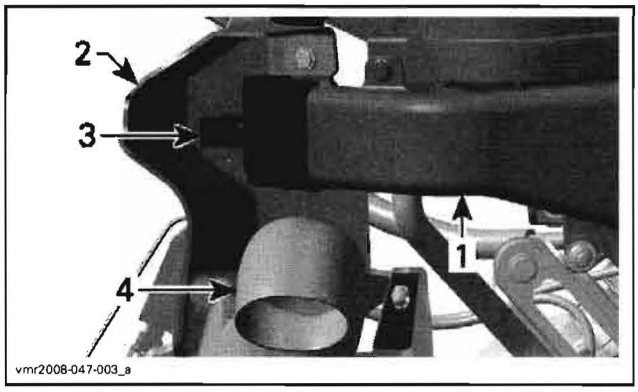

1. *Inlet tube of air filter housing*
2. *Water deflector*
3. *Restrictor*
4. *CVT air inlet*

Restrictor Installation

The installation is the reverse of the removal procedure.

www.midwestmanuals.com
Sales@midwestmanuals.com



sales@midwestmanuals.com
www.midwestmanuals.com

www.midwestmanuals.com

EXHAUST SYSTEM

SERVICE TOOLS

Description	Part Number	Page
exhaust spring tool	529 035 983	42

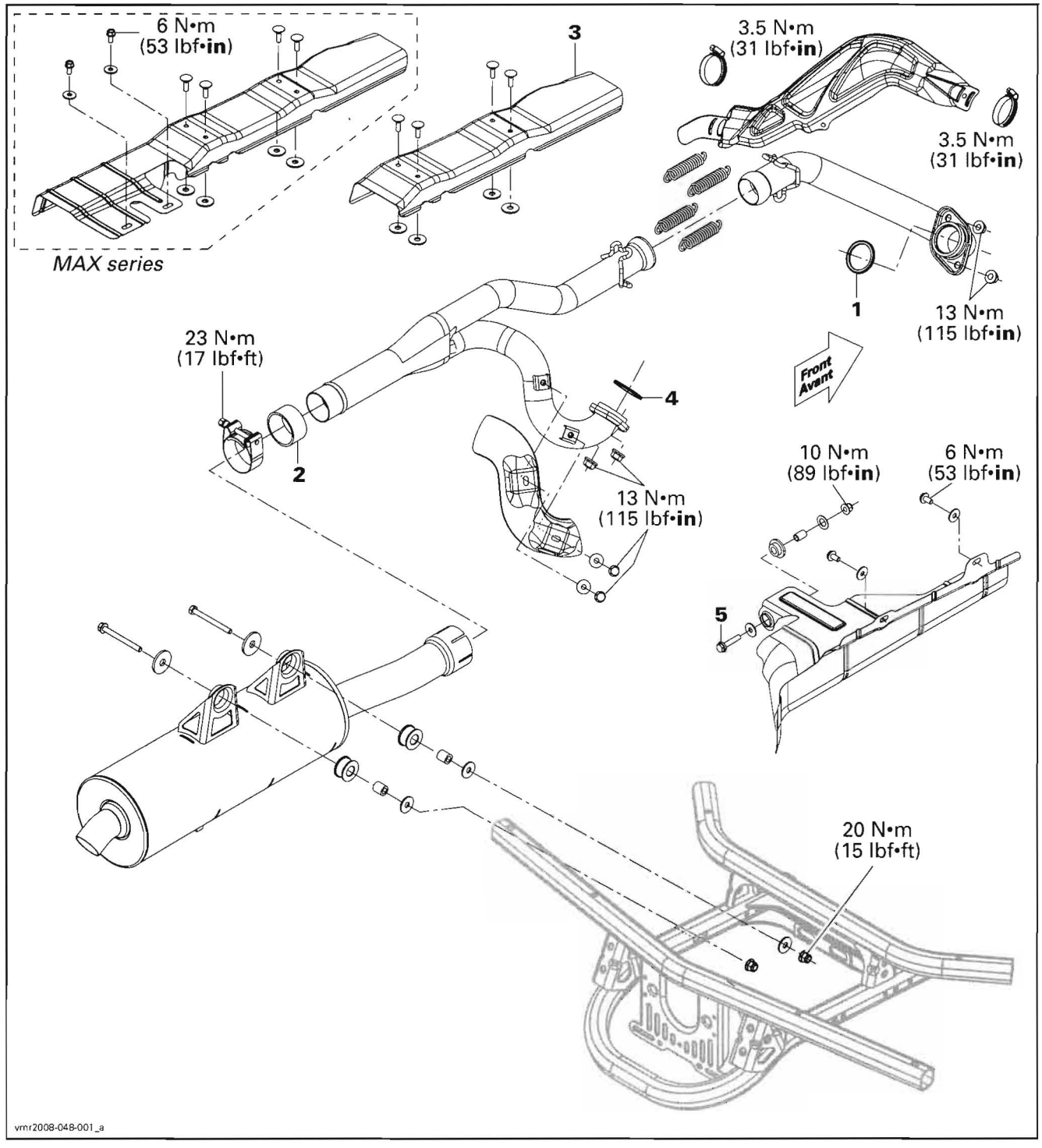

www.midwestmanuals.com
Sales@midwestmanuals.com

www.midwestmanuals.com

GENERAL

⚠ WARNING

To avoid potential burns, never touch exhaust system components immediately after the engine has been run because these components are very hot. Let engine and exhaust system cool down before performing any servicing.

During assembly/installation, use the torque values and service products as in the exploded views.

Clean threads before applying a threadlocker. Refer to *SELF-LOCKING FASTENERS* and *LOCTITE APPLICATION* at the beginning of this manual for complete procedure.

⚠ WARNING

Torque wrench tightening specifications must strictly be adhered to.
Locking devices (e.g.: locking tabs, elastic stop nuts, self-locking fasteners, cotter pin, etc.) must be installed or replaced with new ones where specified. If the efficiency of a locking device is impaired, it must be renewed.

PROCEDURES

FRONT EXHAUST PIPE

Inspection

Check for cracks, bending or other damages. Replace if necessary.

Removal

Remove LH side panel.

Unscrew heat shield clamps.

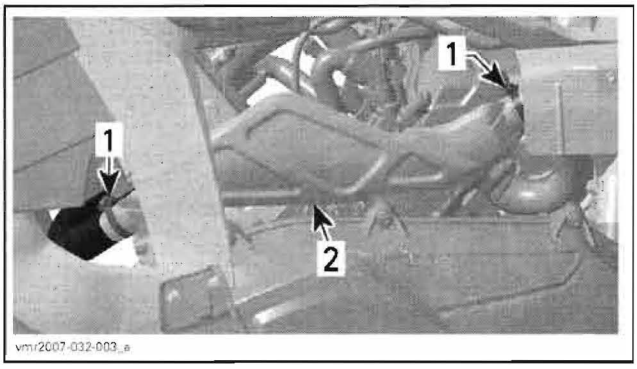

1. *Heat shield clamps*
2. *Heat shield of front exhaust pipe*

Using the exhaust spring tool (P/N 529 035 983), remove exhaust springs.



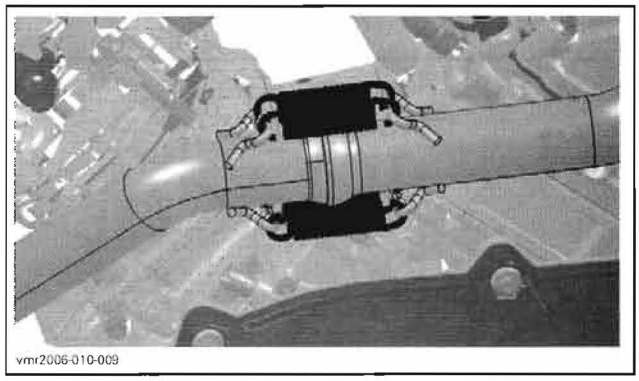

Unscrew exhaust pipe nuts.

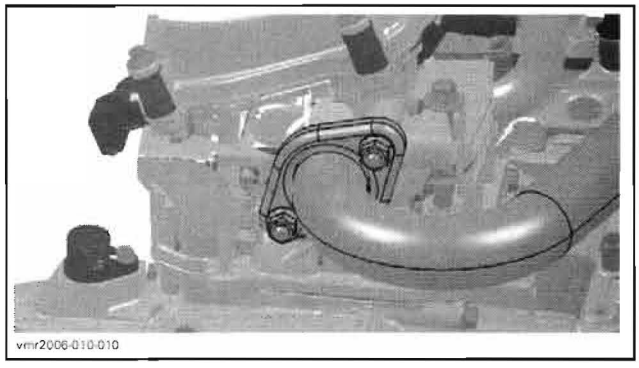

Move front exhaust pipe forward then remove it.

Remove exhaust gasket **no. 1** from engine exhaust port.

Installation

Install a new exhaust gasket on front exhaust pipe end.

Loosely install front exhaust pipe on cylinder head with exhaust nuts.

Make sure front exhaust pipe end is properly aligned inside ball socket of "Y" exhaust pipe. Install exhaust springs.

www.midwestmanuals.com
Sales@midwestmanuals.com

www.midwestmanuals.com

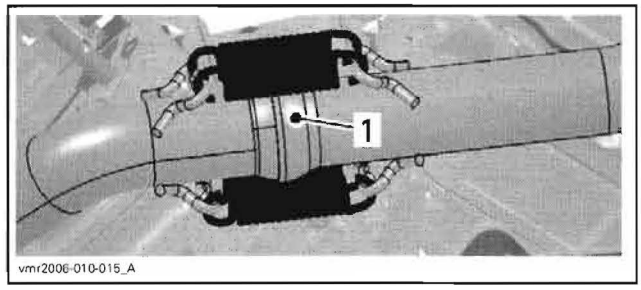

1. "Y" exhaust pipe ball socket

Torque exhaust pipe nuts.

Reinstall all other removed parts.

MUFFLER

Removal

Unscrew muffler clamp.

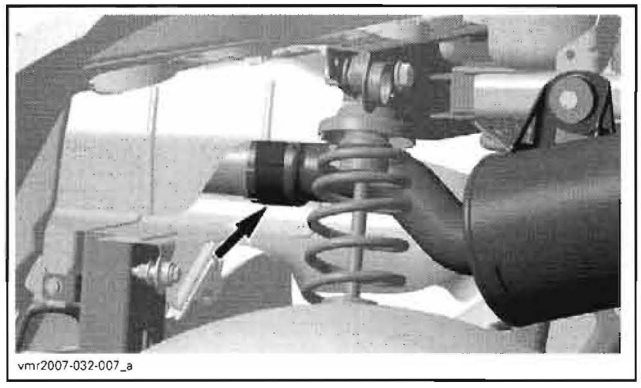

Remove muffler screws then pull muffler to remove it.

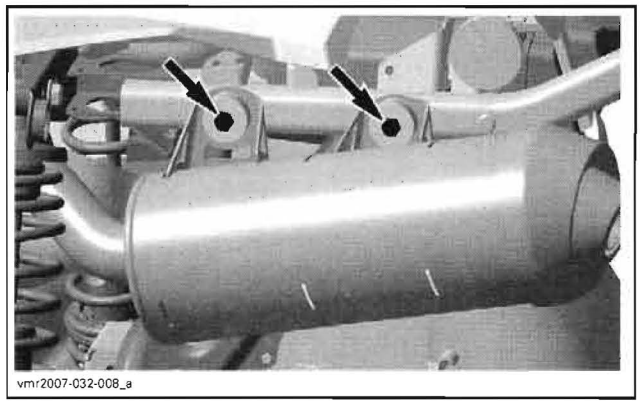

Discard the gasket **no. 2** at the end of "Y" exhaust pipe.

Inspection

Check muffler for cracks or other damages. Replace if necessary.

Installation

For the installation, reverse the removal procedure.

"Y" EXHAUST PIPE

Inspection

Check for cracks, bending or other damages. Replace if necessary.

Removal

Remove heat shield **no. 3**.

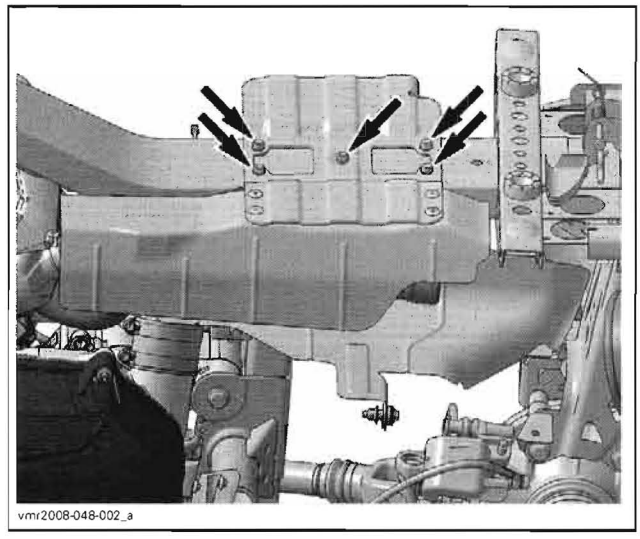

Remove muffler.

Remove front exhaust pipe.

Discard the gasket **no. 2**.

Unscrew exhaust pipe nuts then remove "Y" exhaust pipe.

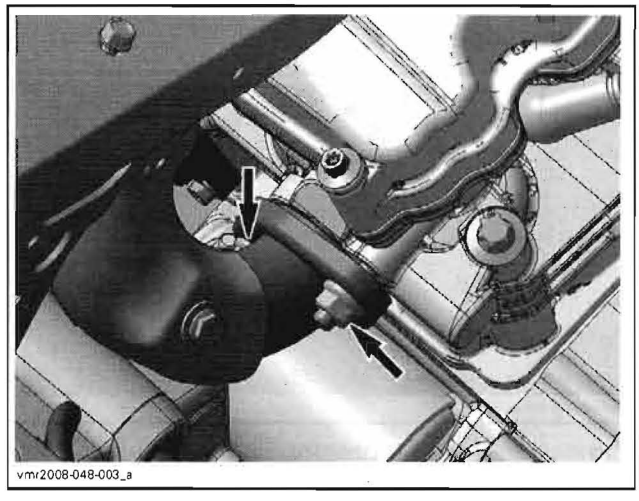

Remove exhaust gasket **no. 4** from engine exhaust port.

Installation

Install a new gasket on each end of Y-exhaust pipe end and another on the end of "Y" exhaust pipe (cylinder side).

www.midwestmanuals.com
Sales@midwestmanuals.com

www.midwestmanuals.com

While sliding the "Y" exhaust pipe end over the front exhaust pipe end, align its other end with the studs on cylinder head.

Secure the front exhaust pipe on cylinder with exhaust nuts.

Torque exhaust nuts and exhaust clamp.

Reinstall all other removed parts.

FUEL TANK PROTECTOR

Inspection

Check for wear, cracks or other damages. Replace if necessary.

Removal

Remove muffler.

Unscrew front bolt.

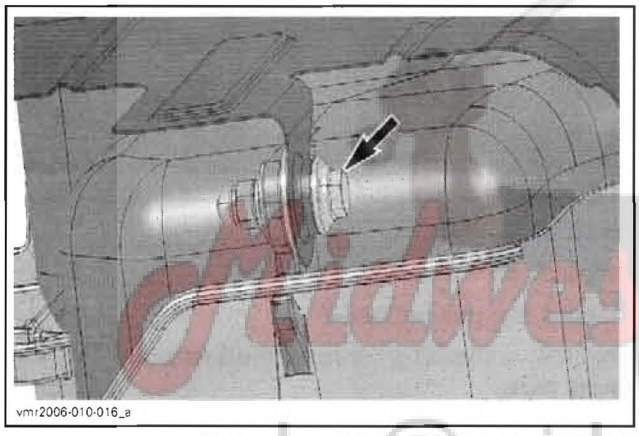
vmr2006-010-016_a

Unscrew upper bolts.

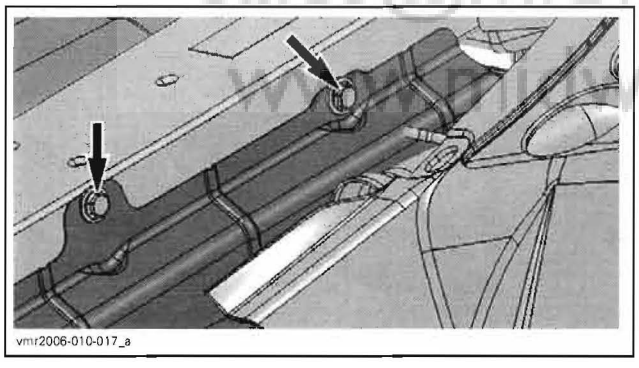
vmr2006-010-017_a

Remove fuel tank protector.

Installation

The installation is the reverse of the removal procedure but pay attention to the following.

First, loosely install front bolt then install remaining bolts. Torque all bolts as per installation sequence.

www.midwestmanuals.com
Sales@midwestmanuals.com

www.midwestmanuals.com

LUBRICATION SYSTEM

SERVICE TOOLS

Description	Part Number	Page
adapter hose	529 035 652	49
oil pressure gauge	529 035 709	49
disconnect tool	529 035 714	49

SERVICE PRODUCTS

Description	Part Number	Page
XP-S 5W30 mineral oil	219 700 706	48
Loctite 243 (blue)	293 800 060	51

www.midwestmanuals.com
Sales@midwestmanuals.com

www.midwestmanuals.com

COMPONENTS

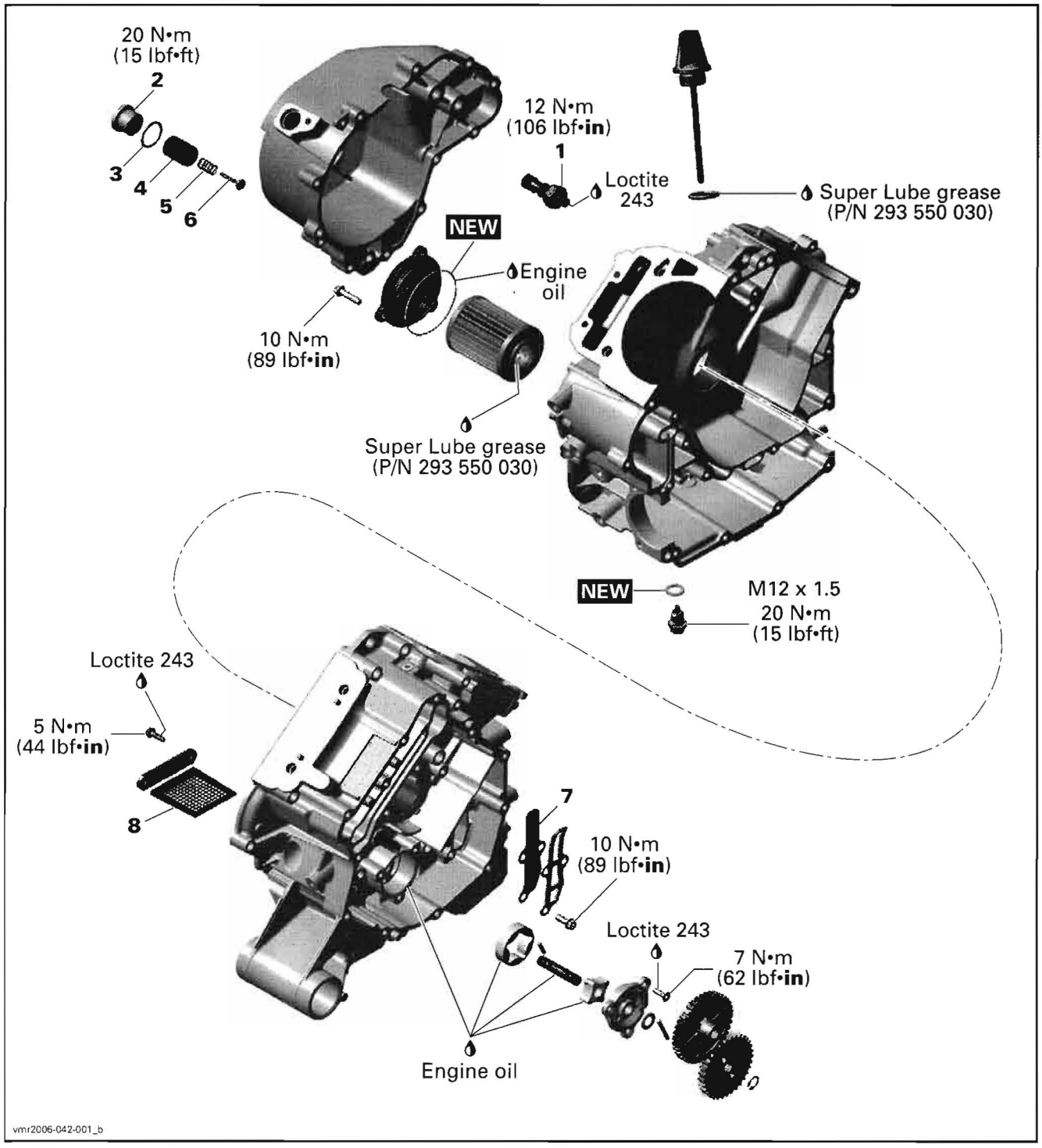

www.midwestmanuals.com
Sales@midwestmanuals.com

www.midwestmanuals.com

ENGINE LUBRICATION

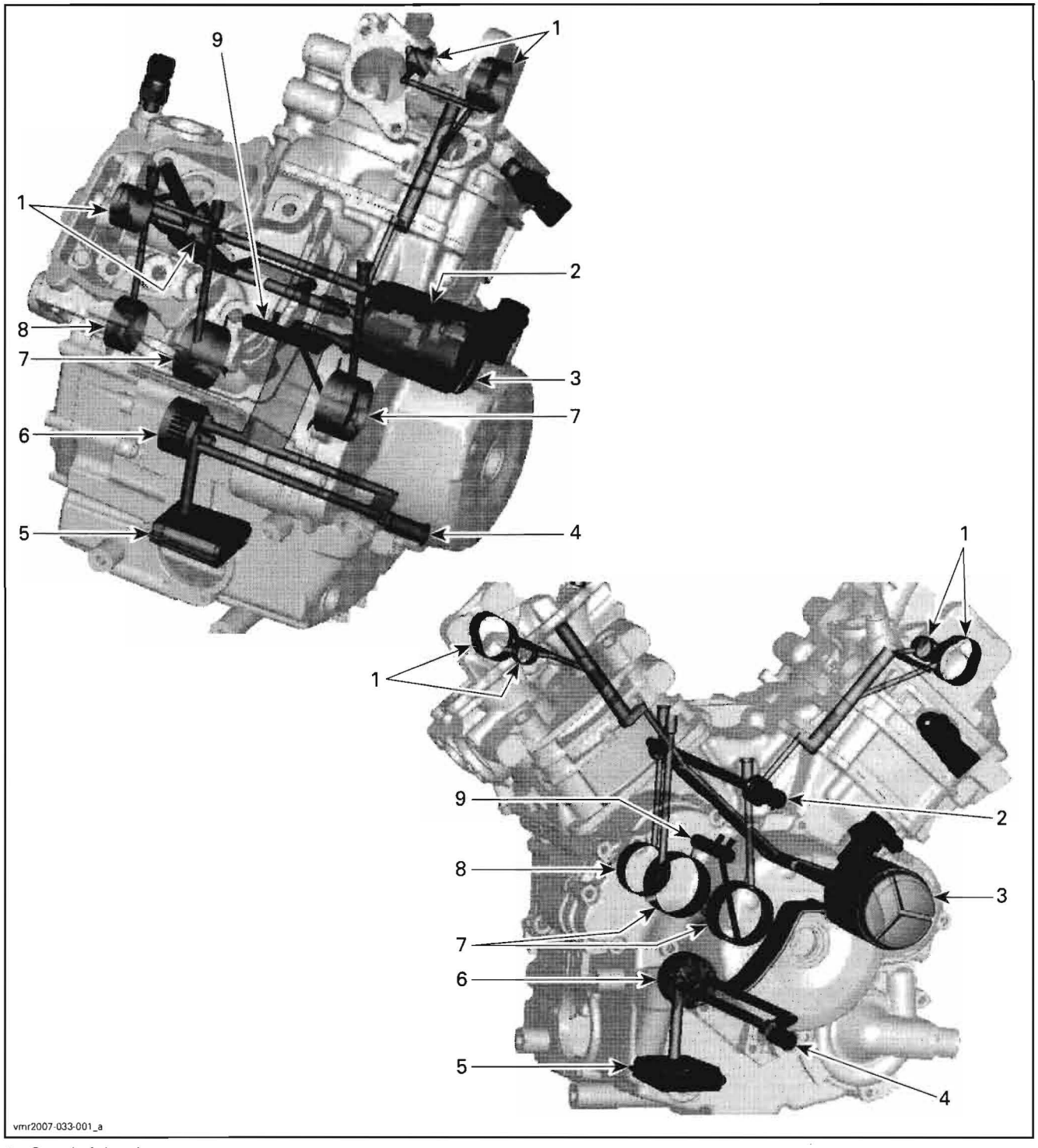

1. *Camshaft bearings*
2. *Oil pressure switch*
3. *Oil filter*
4. *Oil pressure regulator valve*
5. *Oil strainer*
6. *Oil pump*
7. *Crankshaft main bearings*
8. *Crankshaft support bearing*
9. *Connecting rod bearings*

www.midwestmanuals.com
Sales@midwestmanuals.com

www.midwestmanuals.com

GENERAL

During assembly/installation, use the torque values and service products as in the exploded view.

Clean threads before applying a threadlocker. Refer to *SELF-LOCKING FASTENERS* and *LOCTITE APPLICATION* at the beginning of this manual for complete procedure.

⚠ WARNING

Torque wrench tightening specifications must strictly be adhered to.
Locking devices (e.g.: locking tabs, elastic stop nuts, self-locking fasteners, etc.) must be installed or replaced with new ones where specified. If the efficiency of a locking device is impaired, it must be renewed.

MAINTENANCE

ENGINE OIL

Recommended Oil

Use 4-stroke engine oil that meets or exceeds the requirements for API service classification SM, SL or SJ. Always check the API service label certification on the oil container, it must contain at least one of the above standards.

Oil Viscosity

XP-S 5W30 mineral oil (P/N 219 700 706) is recommended for all seasons.

Refer to the following chart for other viscosity grades.

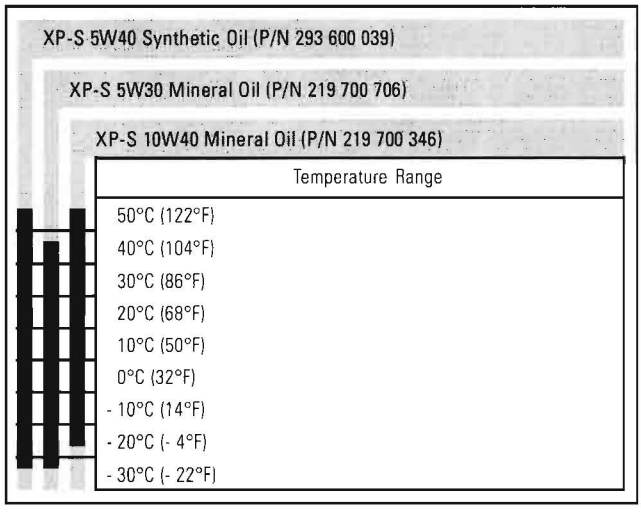

Oil Level Verification

NOTE: Strictly follow this procedure, otherwise wrong oil level may be indicated.

Ensure vehicle is on a level surface.

Start engine and let idle for a few minutes.

Stop engine. Wait a few minutes to allow oil to flow down to crankcase then check oil level.

Fully screw in dipstick to check oil level.

Remove dipstick and read oil level.

Oil level must be between minimum and maximum marks on dipstick.

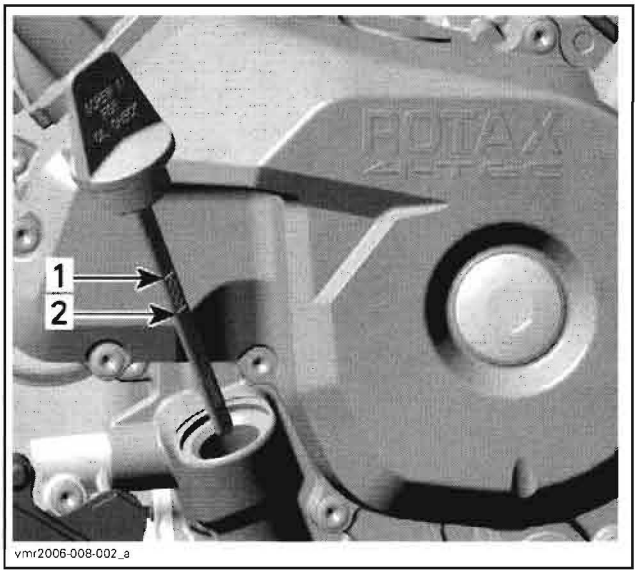

TYPICAL — FULLY SCREW DIPSTICK TO CHECK OIL LEVEL
1. Maximum
2. Minimum

There is a capacity of 300 mL (10 U.S. oz) between the two marks.

Refill oil as necessary. Do not overfill.

Reinstall dipstick.

Oil and Filter Change

Prior to change the oil, ensure vehicle is on a level surface.

Oil and oil filter must be replaced at the same time. Oil change and oil filter replacement should be done with a warm engine.

⚠ WARNING

The engine oil can be very hot. Wait until engine oil is warm.

Place a drain pan under the engine drain plug area.

Clean the drain plug area.

Unscrew drain plug and discard the gasket ring.

www.midwestmanuals.com
Sales@midwestmanuals.com

www.midwestmanuals.com

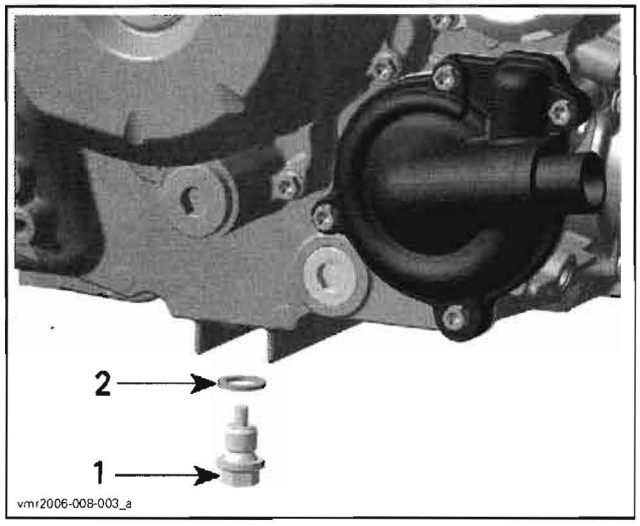

1. *Drain plug*
2. *Gasket ring*

Remove dipstick.

Allow oil to drain completely from crankcase.

NOTE: Oil condition gives information about the engine condition. See *TROUBLESHOOTING* section.

Clean the magnetic drain plug from metal shavings and residue. Presence of debris gives an indication of failure inside the engine. Check engine to correct the problem.

Install a **NEW** gasket ring on drain plug. Torque drain plug to 20 N•m (15 lbf•ft).

CAUTION: Never use the gasket ring a second time. Always replace by a new one.

Replace oil filter. Refer to *OIL FILTER* further in this section.

Refill engine with recommended engine oil. See *RECOMMENDED OIL* and *OIL VISCOSITY CHART* above.

Oil change capacity with filter: 2 L (2.11 qt).

After filling, check the oil level with the dipstick. Refer to *OIL LEVEL CHECK* above.

Run engine to ensure oil filter and drain plug areas are not leaking.

Dispose oil and filter as per your local environmental regulations.

INSPECTION

ENGINE OIL PRESSURE

NOTE: The engine oil pressure test should be done with a **warm engine** 90°C (194°F) and the **recommended oil**.

Remove the oil pressure switch. See procedure below.

Install oil pressure gauge (P/N 529 035 709) and adapter hose (P/N 529 035 652).



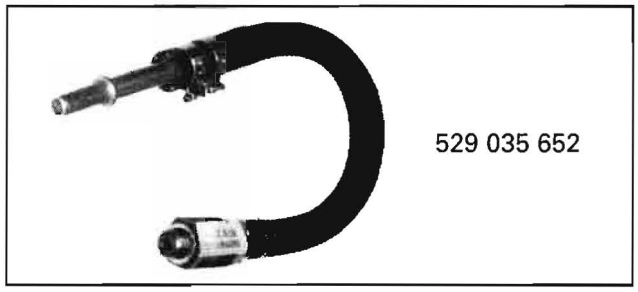

The engine oil pressure should be within the following values.

OIL PRESSURE	1250 RPM	6000 RPM
MINIMAL	70 kPa (10 PSI)	350 kPa (51 PSI)
NOMINAL	180 kPa (26 PSI)	420 kPa (61 PSI)
MAXIMAL	300 kPa (43 PSI)	550 KPa (80 PSI)

If the engine oil pressure is out of specifications, check the points described in *TROUBLESHOOTING* section.

Remove oil pressure gauge and adapter hose.

NOTE: To remove adapter hose from oil pressure gauge, use the disconnect tool (P/N 529 035 714).

Reinstall the oil pressure switch.

PROCEDURES

OIL FILTER

Oil Filter Removal

Remove oil filter screws.

www.midwestmanuals.com
Sales@midwestmanuals.com

www.midwestmanuals.com

Remove oil filter cover.

Remove oil filter.

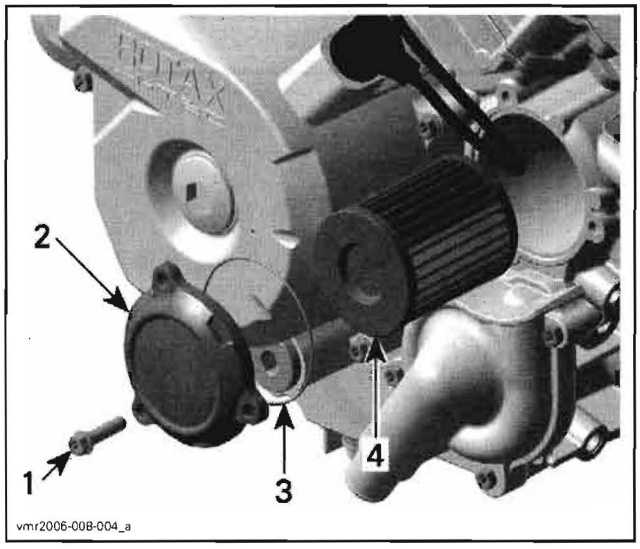

1. *Oil filter screw*
2. *Oil filter cover*
3. *O-ring*
4. *Oil filter*

Oil Filter Inspection

Check and clean the oil filter inlet and outlet area for dirt and other contaminations.

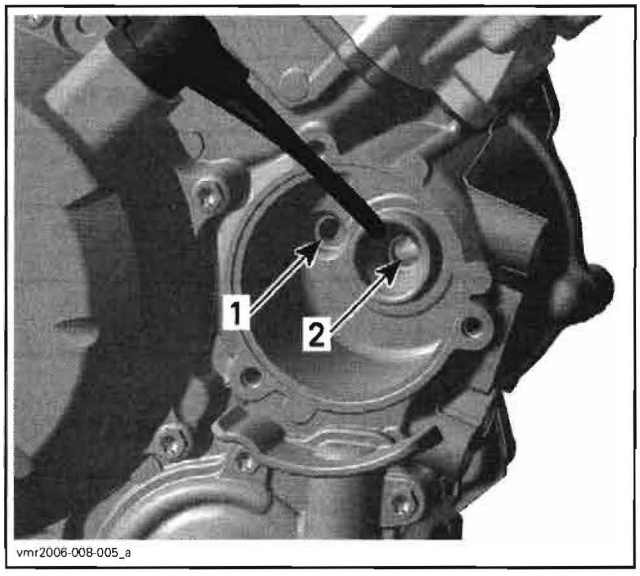

1. *Inlet bore from the oil pump to the oil filter*
2. *Outlet bore to the engine oil providing system*

Oil Filter Installation

Install a NEW O-ring on oil filter cover.

Install the filter into the cover.

Apply engine oil on O-ring and grease on the end of filter.

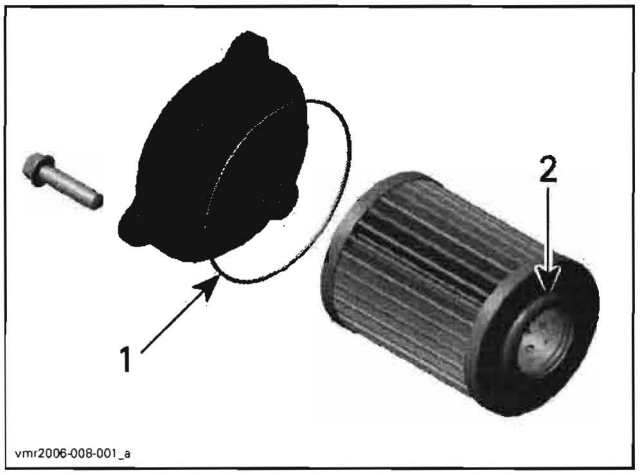

1. *Slightly oil*
2. *Slightly grease*

Install the cover on the engine.

Torque screws to 10 N•m (89 lbf•**in**).

OIL PRESSURE SWITCH (OPS)

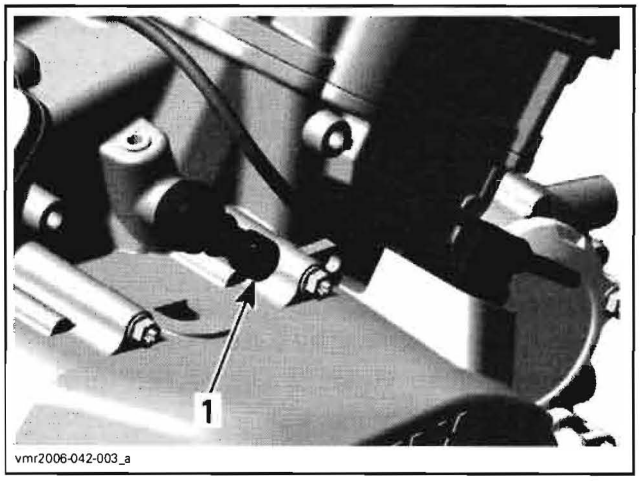

1. *Oil pressure switch*

Oil Pressure Switch Activation

Oil pressure switch works when engine oil pressure is between 20 and 40 kPa (2.9 and 5.8 PSI).

To check the function of the oil pressure switch, an oil pressure test has to be performed. Refer to *ENGINE OIL PRESSURE*.

If the engine oil pressure is good, check the resistance of the oil pressure switch while engine is off and while engine is running.

Oil Pressure Switch Resistance Test

Disconnect the connector from the oil pressure switch.

Use a multimeter to check the resistance between as shown.

www.midwestmanuals.com
Sales@midwestmanuals.com

www.midwestmanuals.com

OPS CONNECTOR		ENGINE NOT RUNNING	ENGINE RUNNING
PIN		RESISTANCE (Ω)	
1	Engine ground	Close to 0 Ω (normally closed switch)	Infinitely high when pressure reaches 20 - 40 kPa (2.9 - 5.8 PSI)

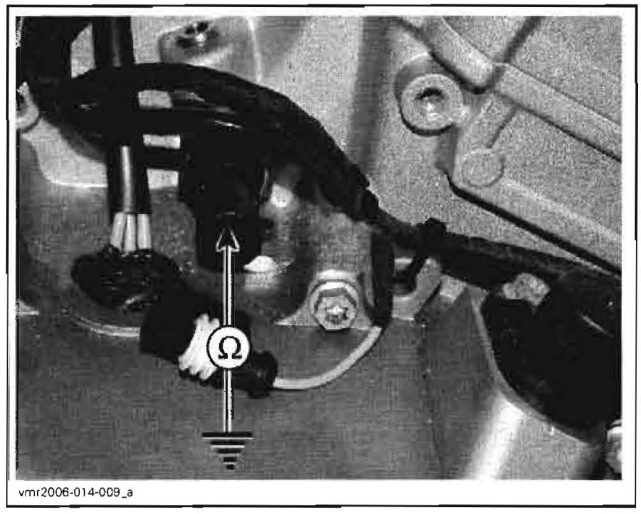

If resistance values are incorrect, replace the oil pressure switch.

If the values are correct, check the continuity of the wiring harness.

Disconnect the connector "A" from the ECM and check continuity of circuit 10.

Oil Pressure Switch Removal

Unplug then unscrew the oil pressure switch **no. 1**, mounted on the crankcase.

Oil Pressure Switch Installation

Torque switch to 12 N•m (106 lbf•**in**).

NOTE: Install oil pressure switch with Loctite 243 (blue) (P/N 293 800 060).

ENGINE OIL PRESSURE REGULATOR

The oil pressure regulator is located on the engine magneto side (inside magneto cover).

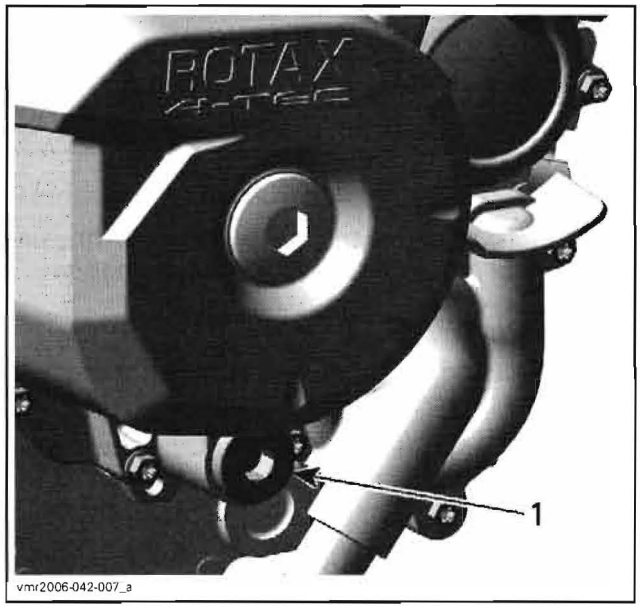

1. Engine oil pressure regulator

NOTE: The oil pressure regulator system works when the oil pressure exceeds 450 kPa (65 PSI).

Removal

Remove plug screw **no. 2** and pull oil pressure regulator out.

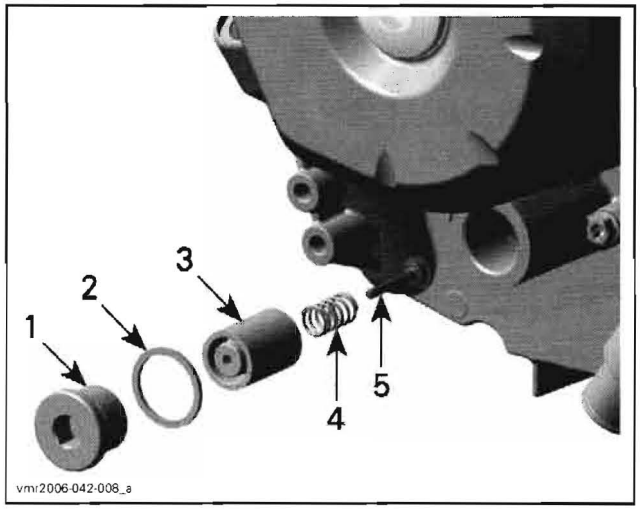

1. Plug screw
2. Gasket ring
3. Pressure regulator housing
4. Spring
5. Pressure regulator valve

Inspection

Inspect pressure regulator housing **no. 4** and valve **no. 6** for scoring or other damages.

Check spring **no. 5** for free length.

www.midwestmanuals.com
Sales@midwestmanuals.com

www.midwestmanuals.com

SPRING FREE LENGTH	
NEW NOMINAL	39 mm (1.535 in)
SERVICE LIMIT	37 mm (1.457 in)

NOTE: Replace worn or damaged components.

Clean bore and thread in the magneto housing from metal shavings and other contaminations.

Installation

For installation, reverse the removal procedure. Pay attention to the following details.

NOTE: At installation, always replace the gasket ring **no. 3** of the plug screw.

OIL PUMP

The oil pump is located on the engine PTO side (behind cover).

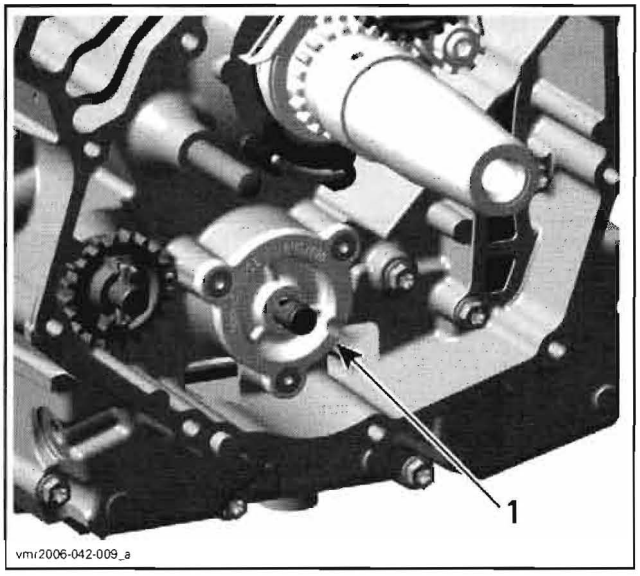

1. Oil pump

Removal

Remove parts to access the engine crankcase PTO cover.

Remove the engine crankcase PTO cover. Refer to *BOTTOM END* section.

Remove:
- retaining ring
- oil pump gear
- needle pin
- thrust washer

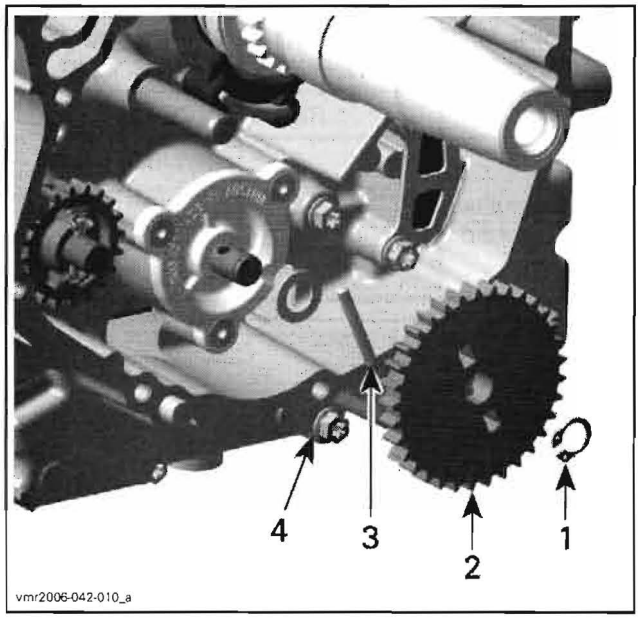

1. Retaining ring
2. Oil pump gear
3. Needle pin
4. Thrust washer

- oil pump cover screws and pull oil pump cover
- oil pump shaft with inner rotor and outer rotor.

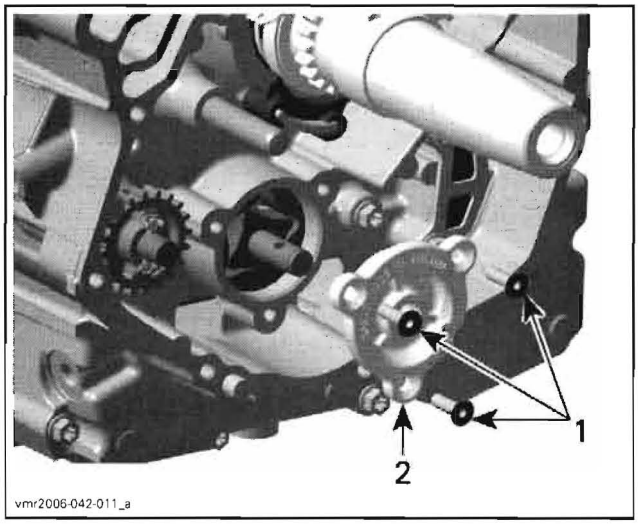

1. Retaining screws
2. Oil pump cover

Inspection

Inspect oil pump for marks or other damages. Check for scratches in crankcase between outer rotor and oil pump bore. If so, replace damaged parts.

www.midwestmanuals.com
Sales@midwestmanuals.com

www.midwestmanuals.com

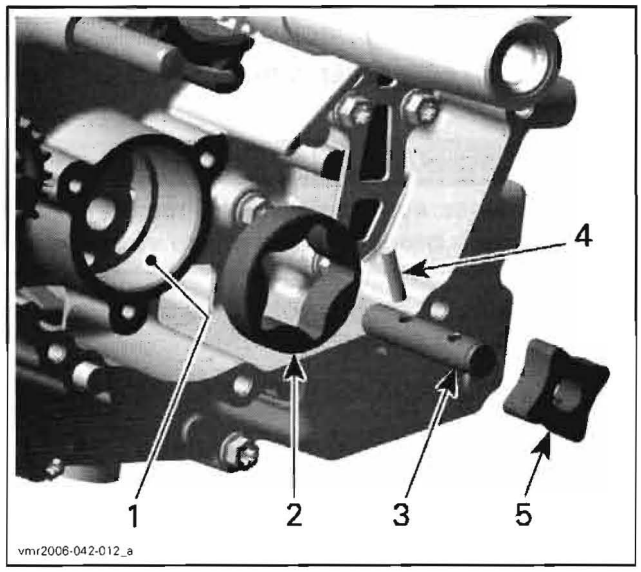

1. *Oil pump bore*
2. *Outer rotor*
3. *Oil pump shaft*
4. *Needle pin*
5. *Inner rotor*

Check inner rotor for corrosion pin holes or other damages. If so, replace oil pump shaft assembly.

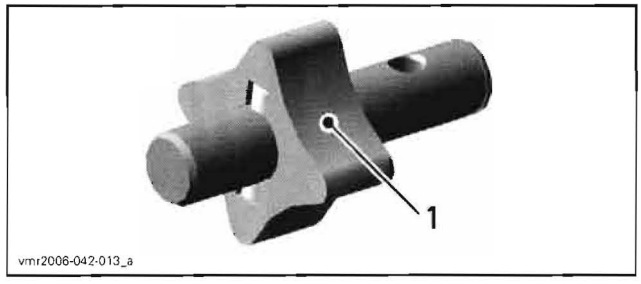

1. *Pittings on the teeth*

Using a feeler gauge, measure the clearance of inner and outer rotors as shown.

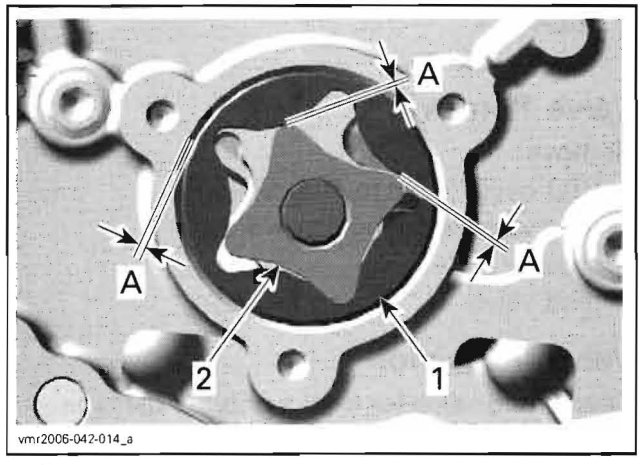

1. *Outer rotor*
2. *Inner rotor*

A. Service limit: 0.25 mm (.009 in)

If clearance of inner and outer rotors exceeds the tolerance, replace oil pump shaft assembly. Ensure to also check oil pump cover. If damaged, replace the complete oil pump assembly.

If clearance between outer rotor and its bore in crankcase exceeds the tolerance, replace the complete oil pump assembly and/or the crankcase.

Using a depth gauge, measure the axial clearance of the oil pump as shown.

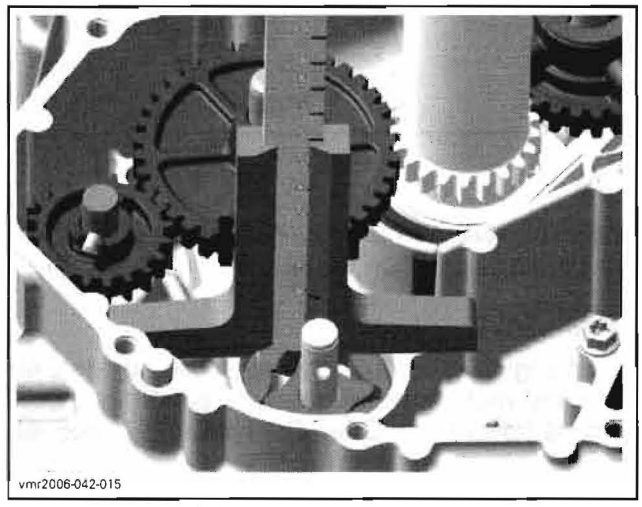

OIL PUMP — MEASUREMENT "A"

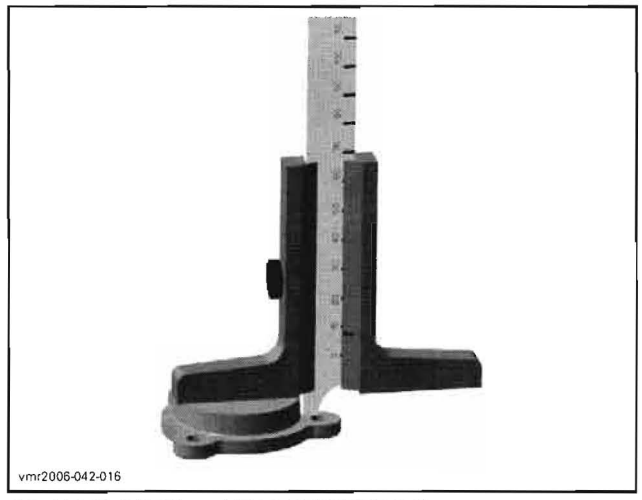

OIL PUMP COVER — MEASUREMENT "B"

Difference between measurements should not exceed 0.2 mm (.008 in). If so, replace the complete oil pump assembly.

NOTE: When the axial clearance of the oil pump shaft assembly increases, the oil pressure decreases.

Installation

For installation, reverse the removal procedure.

www.midwestmanuals.com
Sales@midwestmanuals.com

www.midwestmanuals.com

Pay attention to the following details.

NOTE: The outer rotor and inner rotor are marked. When installing, make sure both markings are on the upper side.

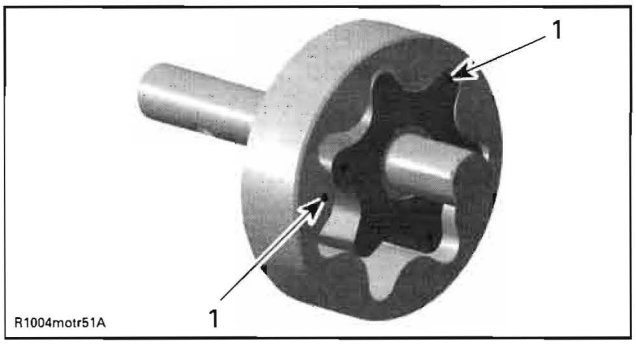

TYPICAL
1. Markings

After reinstallation of the remaining parts, check for smooth operation of the oil pump assembly.

Final Test

After engine is completely reassembled, start engine and make sure oil pressure is within specifications (refer to *ENGINE OIL PRESSURE* above).

ENGINE OIL STRAINER

The engine oil strainer **no. 7** is located between both crankcase halves.

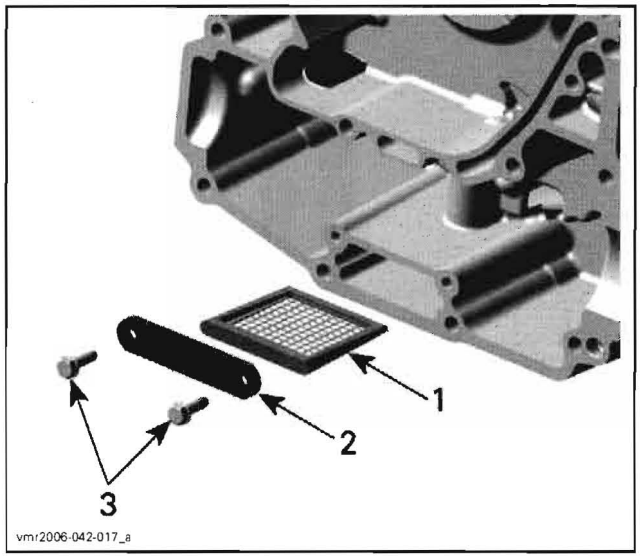

1. Engine oil strainer
2. Retaining plate
3. Screws

Removal

Refer to *BOTTOM END* section.

Cleaning and Inspection

Clean engine oil strainer with a part cleaner then use an air gun to dry it.

⚠ WARNING

Always wear eye protector. Chemicals can cause a rash break out and injure your eyes.

Check engine oil strainer for cracks or other damage. Replace if damaged.

Installation

Refer to *BOTTOM END* section.

REED VALVE

The engine is equipped with a reed valve **no. 8** which prevents accumulation of larger oil quantities in the crankcase. The reed valve is fitted into the crankcase.

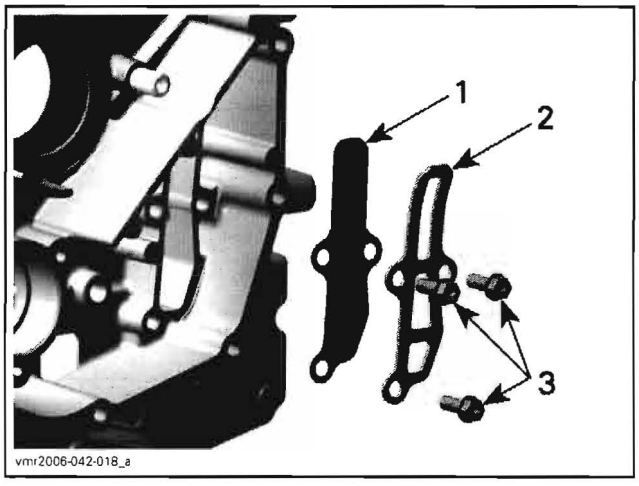

1. Reed valve
2. Stopper
3. Screws

Valve Removal

Remove:
- PTO cover (refer to *PTO COVER*)
- reed valve retaining screws
- stopper plate
- reed valve.

Valve Inspection

Check reed valve for cracks or other damage.

NOTE: Replace reed valve if damaged.

Valve Installation

The installation is the reverse of the removal procedure.

www.midwestmanuals.com
Sales@midwestmanuals.com

www.midwestmanuals.com

COOLING SYSTEM

SERVICE TOOLS

Description	Part Number	Page
installer handle	420 877 650	68
pressure/vacuum pump	529 021 800	58
large hose pincher	529 032 500	59
oil seal pusher	529 035 757	68
rotary seal installer	529 035 766	69
Fluke 111 multimeter	529 035 868	62
test cap	529 035 991	58
puller kit	529 036 056	68

SERVICE PRODUCTS

Description	Part Number	Page
BRP premixed coolant	219 700 362	59
Molykote 111	413 707 000	69

www.midwestmanuals.com
Sales@midwestmanuals.com

www.midwestmanuals.com

RADIATOR

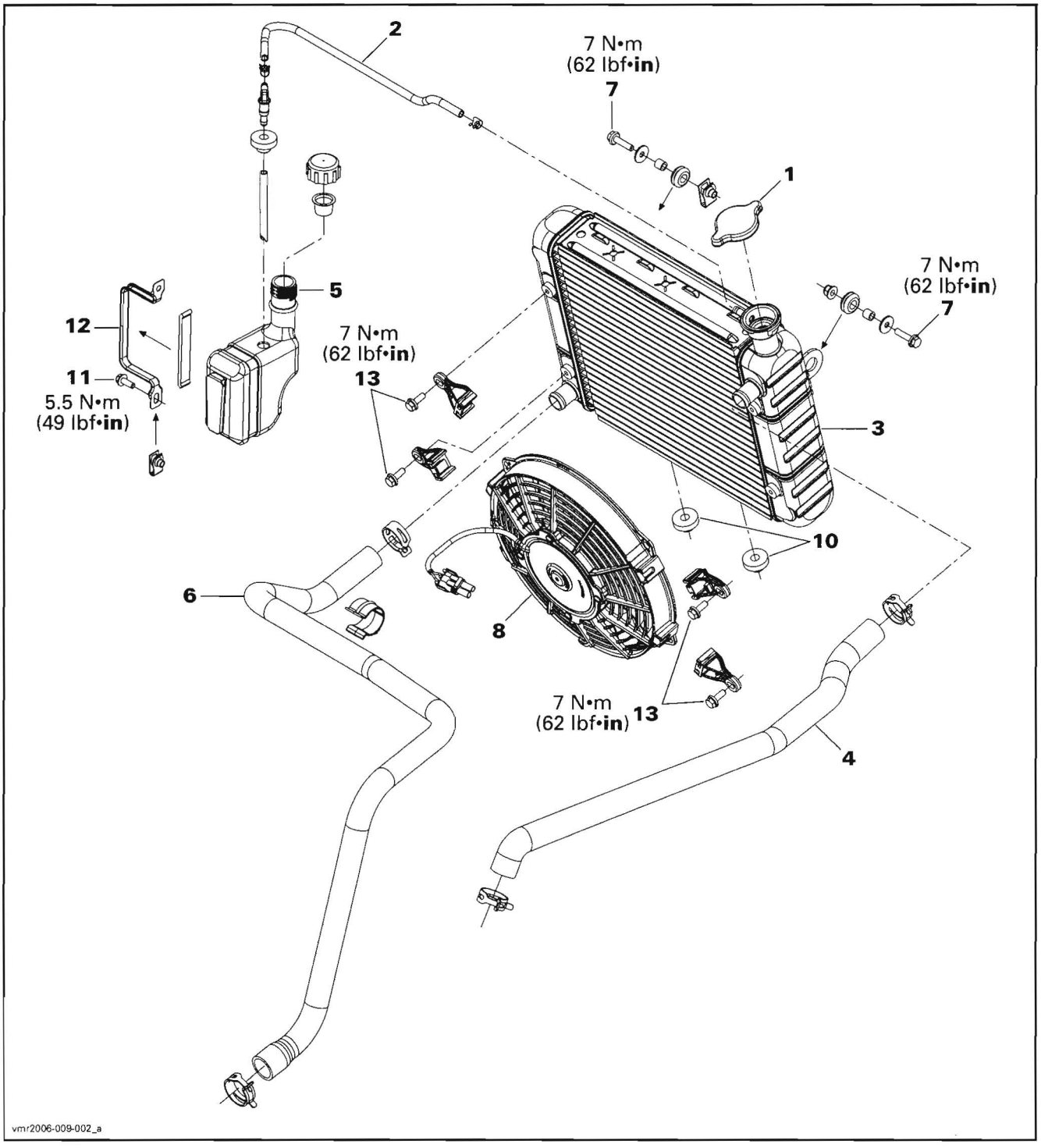

www.midwestmanuals.com
Sales@midwestmanuals.com

www.midwestmanuals.com

WATER PUMP

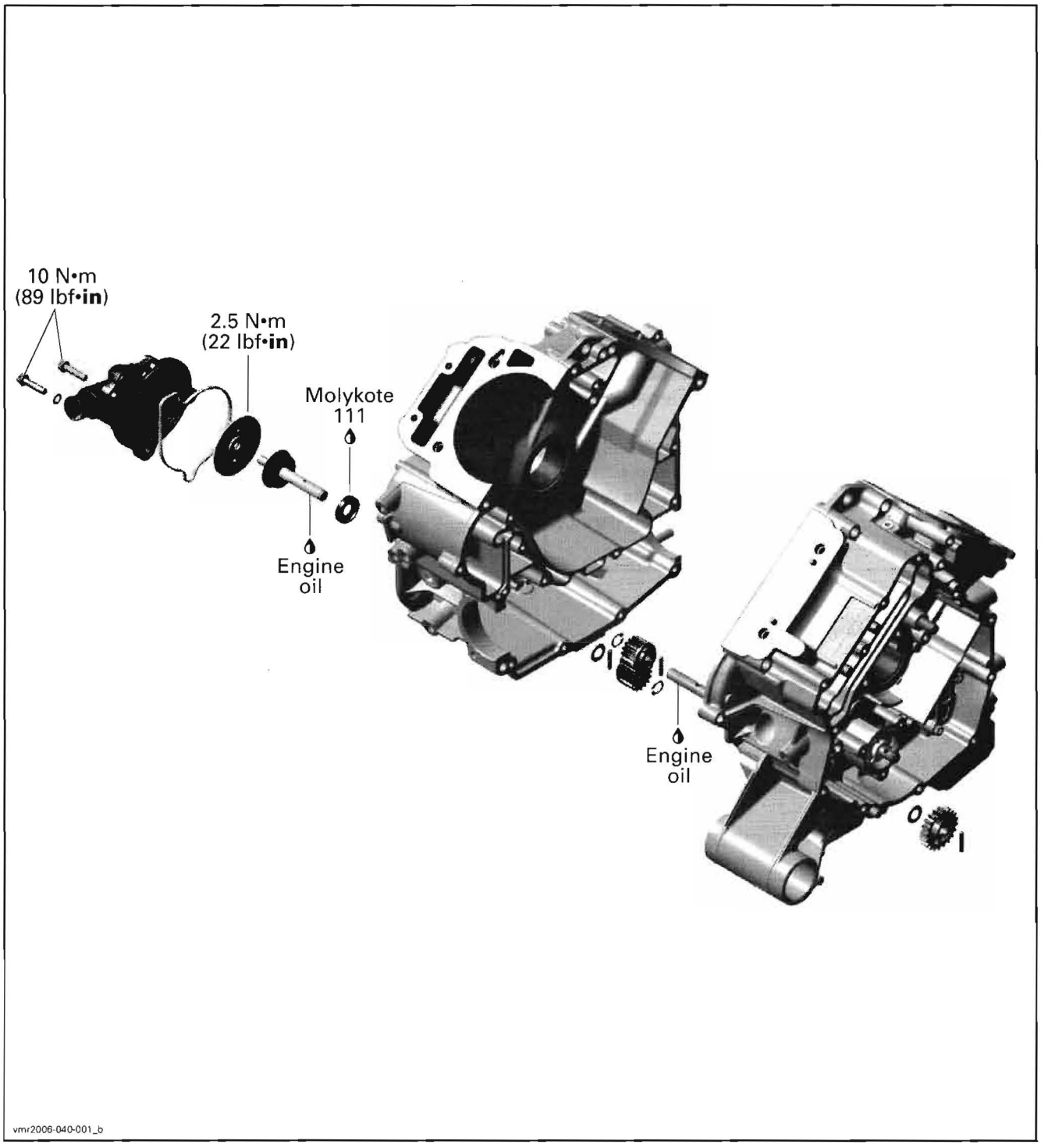

www.midwestmanuals.com
Sales@midwestmanuals.com

www.midwestmanuals.com

GENERAL

⚠ WARNING

Never start engine without coolant. Some engine parts such as the rotary seal on water pump shaft can be damaged.

During assembly/installation, use the torque values and service products as in the exploded views.

Clean threads before applying a threadlocker. Refer to *SELF-LOCKING FASTENERS* and *LOCTITE APPLICATION* at the beginning of this manual for complete procedure.

⚠ WARNING

Torque wrench tightening specifications must strictly be adhered to.
Locking devices (e.g.: locking tabs, elastic stop nuts, self-locking fasteners, etc.) must be installed or replaced with new ones where specified. If the efficiency of a locking device is impaired, it must be renewed.

INSPECTION

COOLING SYSTEM LEAK TEST

⚠ WARNING

To avoid potential burns, do not remove the radiator cap or loosen the cooling drain plug if the engine is hot.

Open the access panel and remove the radiator cap **no. 1**.

Install the test cap (P/N 529 035 991) on filler neck.

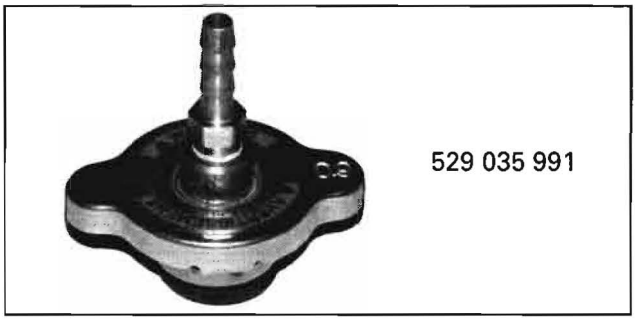

529 035 991

Using pressure/vacuum pump (P/N 529 021 800), pressurize system to 103 kPa (15 PSI).

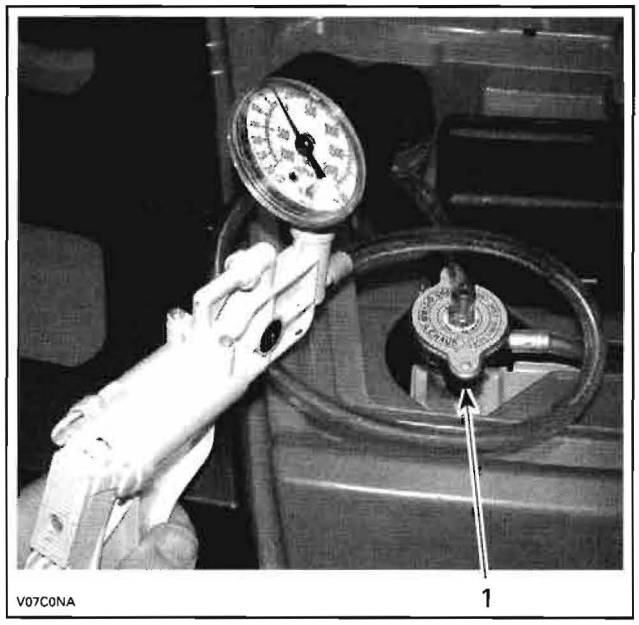

TYPICAL
1. Special radiator cap

Check all hoses, radiator **no. 3** and cylinder(s)/base for coolant leaks or air bubbles.

Inspection

Check general condition of hoses and clamps tightness.

Check the leak indicator hole if there is oil or coolant.

NOTE: Leaking coolant indicates a defective rotary seal. Leaking oil indicates a defective inner oil seal. If either seal is leaking, both seals must be replaced at the same time. Refer to *WATER PUMP SHAFT AND SEALS* in this section.

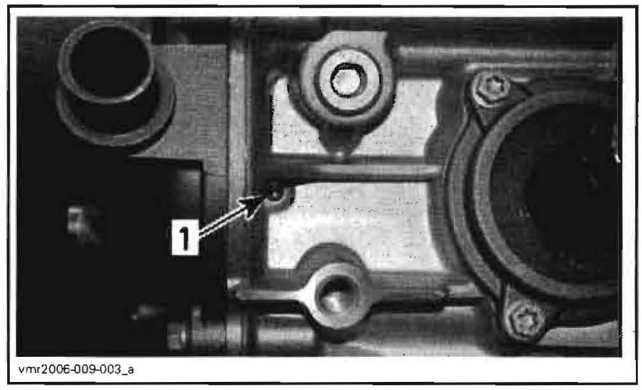

1. Leak indicator hole

Another leak indicator hole is visible on the PTO side. It indicate if the PTO gasket is in good condition. If a liquid leaks by this hole, the PTO gasket replacement is necessary.

www.midwestmanuals.com
Sales@midwestmanuals.com

www.midwestmanuals.com

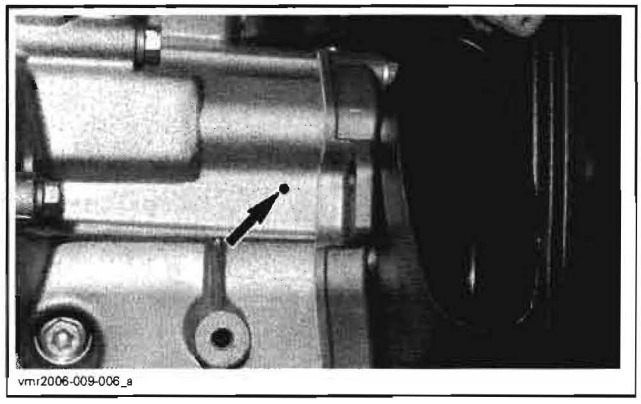
vmr2006-009-006_a

MAINTENANCE

COOLANT REPLACEMENT

⚠ WARNING

To avoid potential burns, do not remove the radiator cap or loosen the cooling drain plug if the engine is hot.

Recommended Coolant

Use BRP premixed coolant (P/N 219 700 362) or a blend of 50% antifreeze with 50% water.

To prevent antifreeze deterioration, always use the same brand. Never mix different brands unless cooling system is completely flushed and refilled.

CAUTION: To prevent rust formation or freezing condition, always replenish the system with the BRP premixed coolant or with 50% antifreeze and 50% water. Do not use tap water, straight antifreeze or straight water in the system. Tap water contains minerals and impurities which build up in the system. During cold weather, straight water causes the system to freeze while straight antifreeze thickens and does not have the same efficiency. Always use ethylene glycol antifreeze containing corrosion inhibitors specifically recommended for aluminum engines.

Draining the System

⚠ WARNING

Never drain or refill cooling system when engine is hot.

Remove radiator cap **no. 1**.

Partially unscrew cooling drain plug located below water pump housing.

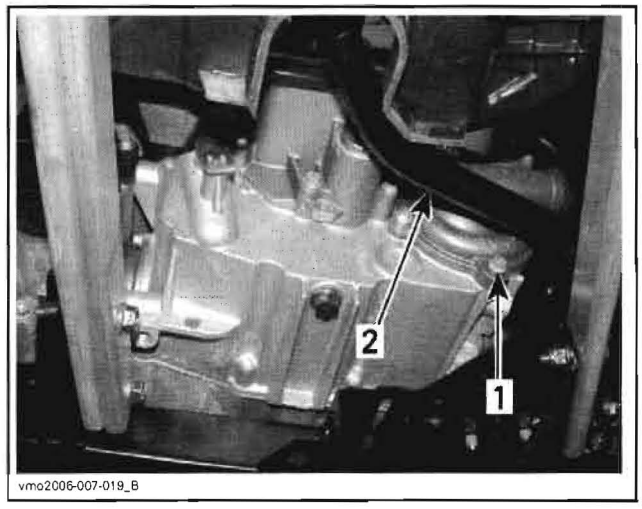

vmo2006-007-019_B

UNDER RH FOOTREST
1. *Cooling drain plug*
2. *Brake pedal*

When cooling system is drained completely, remove cooling drain plug completely and install a new gasket ring. Screw the cooling drain plug and torque it to 10 N•m (89 lbf•**in**).

Refilling the System

Remove the RH side panel.

Pinch radiator inlet hose **no. 4** between radiator and thermostat housing with a large hose pincher (P/N 529 032 500).

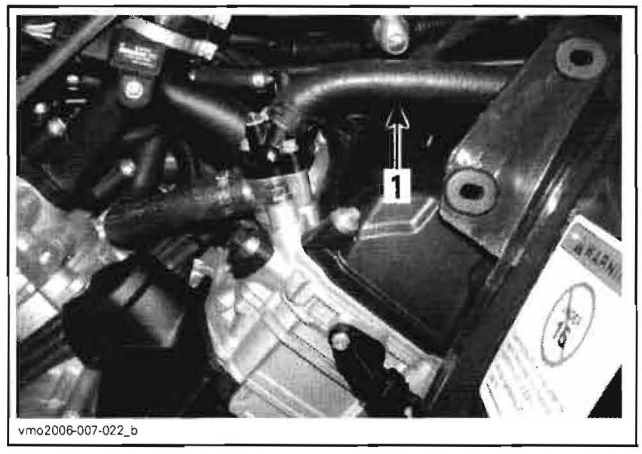

vmo2006-007-022_b

1. *Place hose pincher here*

Unscrew bleeding screws on top of thermostat housing.

www.midwestmanuals.com
Sales@midwestmanuals.com

www.midwestmanuals.com

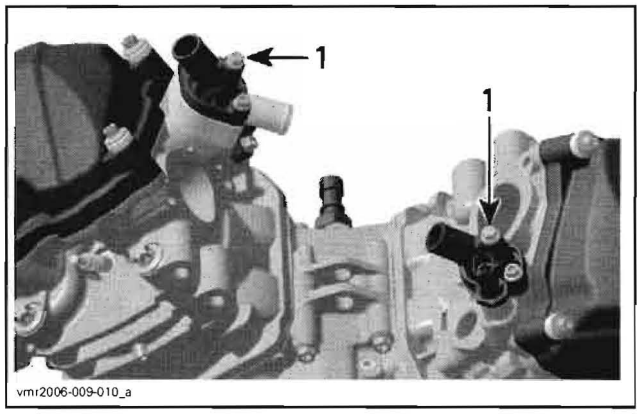

1. Bleeding screws

NOTE: Both cylinders must be bled.

With vehicle on a flat surface, engine cold, refill radiator **no. 3**. When the coolant comes out by the thermostat housing hole, install the bleeding screw with its gasket ring and torque to 5 N•m (44 lbf•**in**).

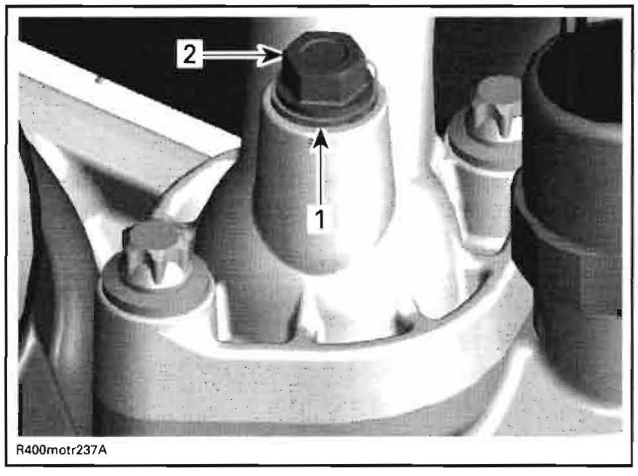

TYPICAL
1. Gasket ring
2. Bleeding screw

Remove hose pincher, fill up the radiator then install radiator cap.

Refill coolant tank **no. 5** up to cold level mark. Install the coolant tank cap. Run engine until thermostat opens then stop engine.

When engine has completely cooled down, recheck coolant level in radiator and coolant tank and top up if necessary. The level in the coolant tank should be between MIN. and MAX. marks.

NOTE: Each year or every 100 hours or when vehicle reaches 3000 km (1865 mi), check coolant concentration (freezing point) with proper tester.

PROCEDURES

THERMOSTAT

The thermostat is a single action type.

Thermostat Removal

NOTE: The thermostat is located on the top of cylinder head, on intake side (front cylinder).

Install a hose pincher on both radiator hoses.

Remove:

– thermostat housing screws and pull thermostat cover

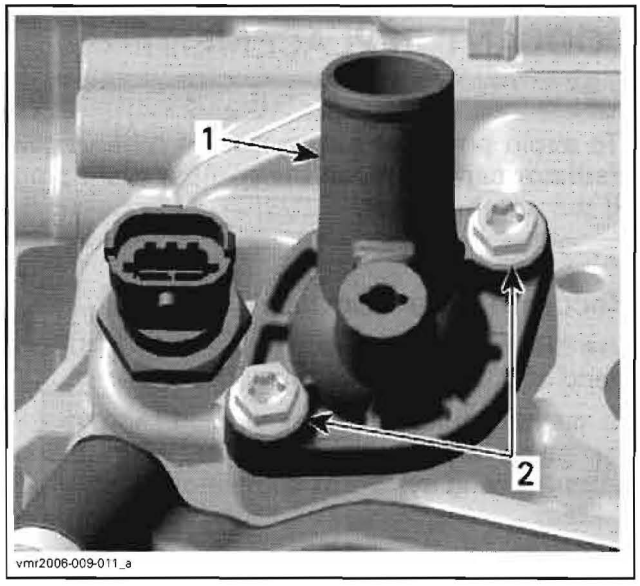

1. Thermostat cover
2. Screws

– thermostat with gasket out of the hole.

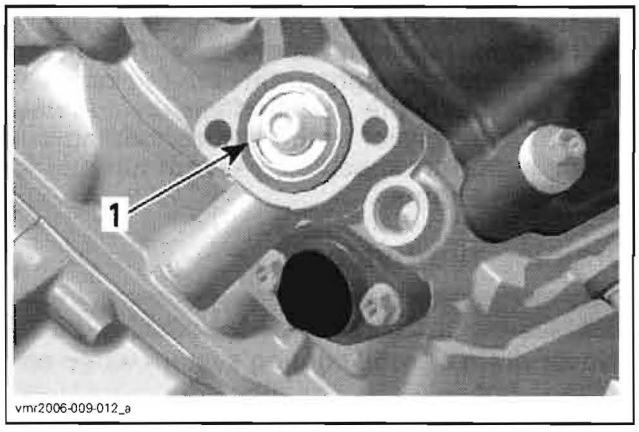

1. Thermostat with gasket

www.midwestmanuals.com
Sales@midwestmanuals.com

www.midwestmanuals.com

Thermostat Test

To check thermostat, put in water and heat water. Thermostat should open when water temperature reaches 65°C (149°F).

Check if the gasket is brittle, hard or damaged. If so, replace gasket.

Thermostat Installation

For installation, reverse the removal procedure, pay attention to the following details.

Install the thermostat cover then torque screws to 6 N•m (53 lbf•**in**).

Check coolant level in radiator and coolant tank and top up if necessary.

CAUTION: Do not forget to bleed the cooling system. Refer to *COOLANT REPLACEMENT.*

RADIATOR CAP

Using a pressure cap tester, check the efficiency of radiator cap **no. 1**. If the efficiency is feeble, install a new 110 kPa (16 PSI) cap (do not exceed this pressure).

RADIATOR

Radiator Inspection

Check radiating fins for clogging or damage.

Remove insects, mud or other obstructions with compressed air or low pressure water.

Radiator Removal

Drain cooling system.

Remove front fascia and radiator shroud, refer to *BODY*.

Remove:

- radiator inlet **no. 4** and radiator outlet **no. 6** hoses
- overflow hose **no. 2**
- mounting bolts **no. 7**.

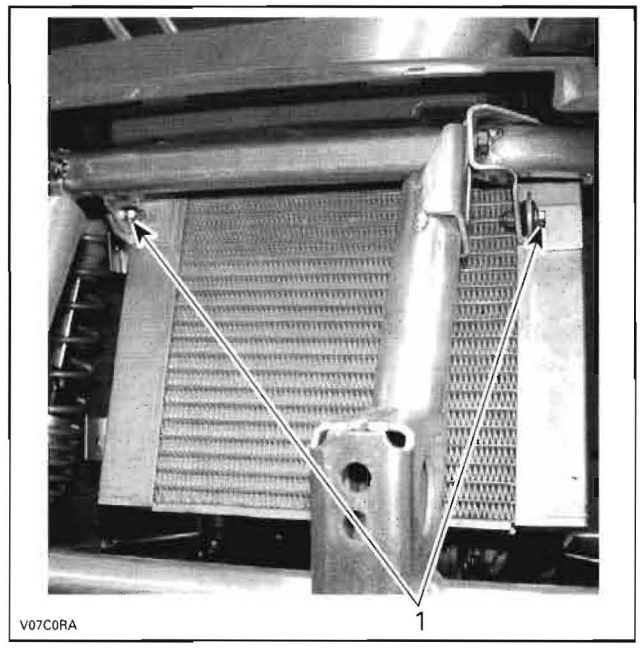

TYPICAL
1. Radiator mounting bolts

Unplug radiator fan **no. 8**.

Remove radiator **no. 3**.

Radiator Installation

For installation, reverse the removal procedure. Pay attention to the following detail.

Install rubber bushings **no. 10** between the bottom of radiator and radiator supports.

Fill up the radiator. Refer to *COOLANT REPLACEMENT*, in this section.

Check for any coolant leakage from radiator and hoses.

COOLANT TANK

The coolant expands as the temperature (up to 100 - 110°C (212 - 230°F)) and pressure rise in the system. If the limiting system working pressure cap is reached 110 kPa (16 PSI), the pressure relief valve in the pressure cap is lifted from its seat and allows coolant to flow through the overflow hose into the overflow coolant tank **no. 5**.

Ensure ventilation holes are not obstructed.

www.midwestmanuals.com
Sales@midwestmanuals.com

www.midwestmanuals.com

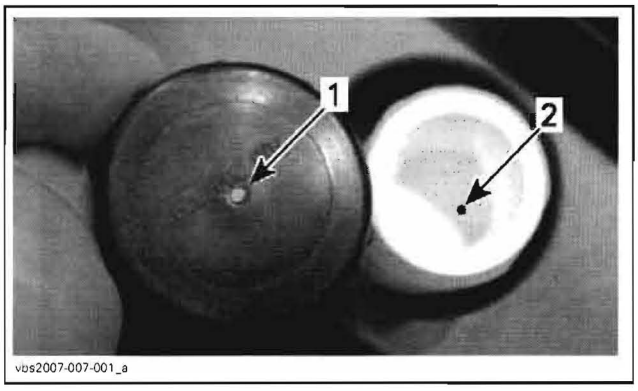

1. *Outer cap vent*
2. *Inner cap vent*

Tank Removal

Remove:

- LH inner fender (refer to *BODY*)
- coolant tank support bolt **no. 11**

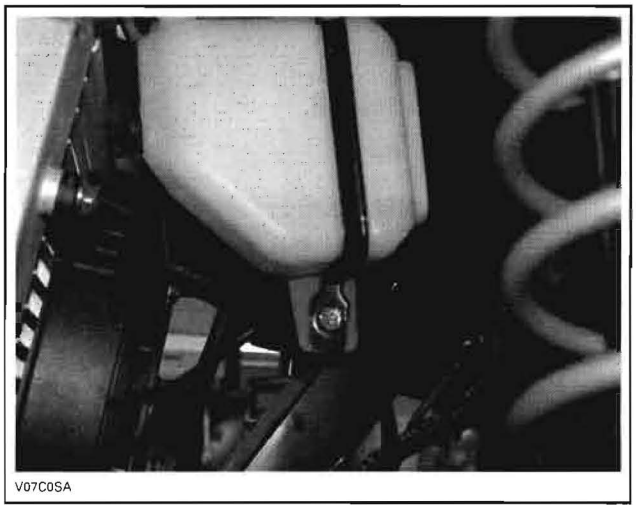

TYPICAL

- overflow hose **no. 2**
- support **no. 12** and coolant tank **no. 5**.

Empty coolant tank.

Tank Installation

The installation is the reverse of the removal procedure.

COOLANT TEMPERATURE SENSOR (CTS)

Refer to *ENGINE MANAGEMENT* section for testing and replacement procedures of the coolant temperature sensor (CTS).

RADIATOR FAN RELAY (R1)

Relay Installation

NOTE: Relay may be inverted by 180° at installation and it will work correctly. Ensure to align tabs of relay with terminals of fuse holder at installation.

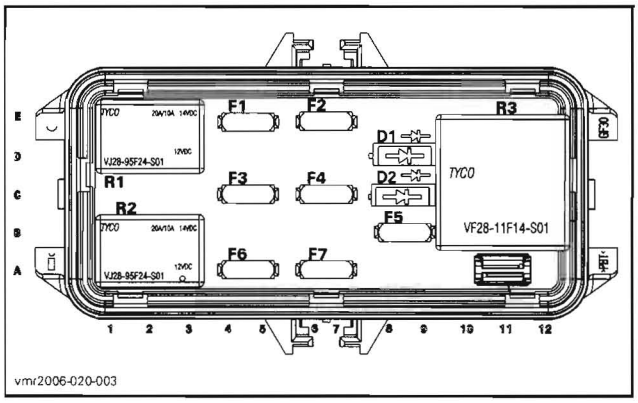

R1: Radiator fan relay

Relay Operation Test

The easiest way to check the relay is to remove it and bypass it with a jumper. If the radiator fan is activated, replace the relay. See illustration to find where to bypass the relay.

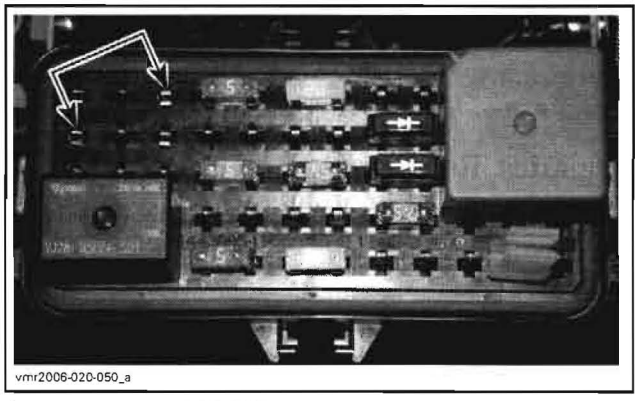

RELAY R1 (RADIATOR FAN)

Relay Continuity Test

Remove relay.

Use the Fluke 111 multimeter (P/N 529 035 868), and select the Ω position.

Probe relay as follows.

TERMINAL		RESISTANCE
30	87	Open circuit (OL)

www.midwestmanuals.com
Sales@midwestmanuals.com

www.midwestmanuals.com

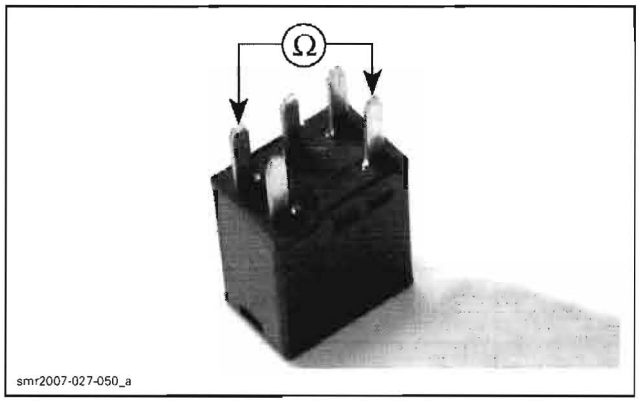

Connect battery as shown and probe relay again as follows.

TERMINAL		RESISTANCE
30	87	0.5 Ω max. (continuity)

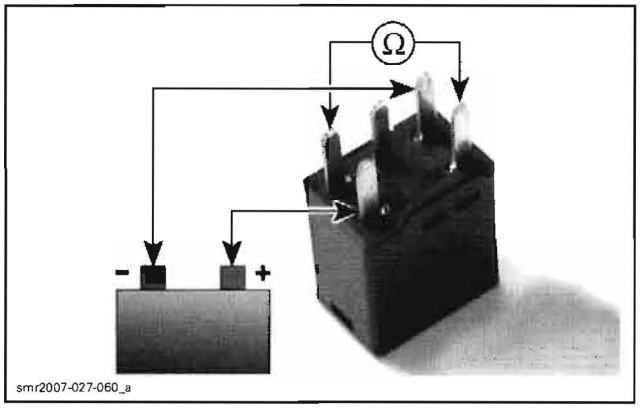

If relay failed any test, replace it.

RADIATOR FAN

Radiator Fan Operation

The ECM controls the radiator fan via the input of the coolant temperature sensor (CTS) and the manifold air pressure and temperature sensor (MAPTS).

The radiator fan should turn on when coolant temperature reaches 98°C (208°F) and should turn off when the coolant cools down at 95°C (203°F).

www.midwestmanuals.com
Sales@midwestmanuals.com

www.midwestmanuals.com

ENGINE TEMPERATURE	INTAKE TEMPERATURE	COOLING FAN	CHECK ENGINE LIGHT	MESSAGE IN MULTIFUNCTION GAUGE	LIMP HOME MODE
	88°C (190°F)	Turns ON			
	85°C (185°F)	Turns OFF			
98°C (208°F)		Turns ON			
95°C (203°F)		Turn OFF			
115°C (239°F)		ON	Turns ON	- Check engine - Hi Temp	
118°C (244°F)		ON	Flashes	Limp Home	Engine RPM limited to 4000

Radiator Fan Test

Connect the vehicle to B.U.D.S. Refer to *ENGINE MANAGEMENT* for procedure and connector location.

In ACTIVATION folder, press COOLANT FAN button.

If fan turns, check CTS, wiring harness and connectors. If all parts are good, replace the ECM.

If fan does not turn when COOLANT FAN button is pressed, use the following troubleshooting chart to resolve the problem.

www.midwestmanuals.com
Sales@midwestmanuals.com

www.midwestmanuals.com

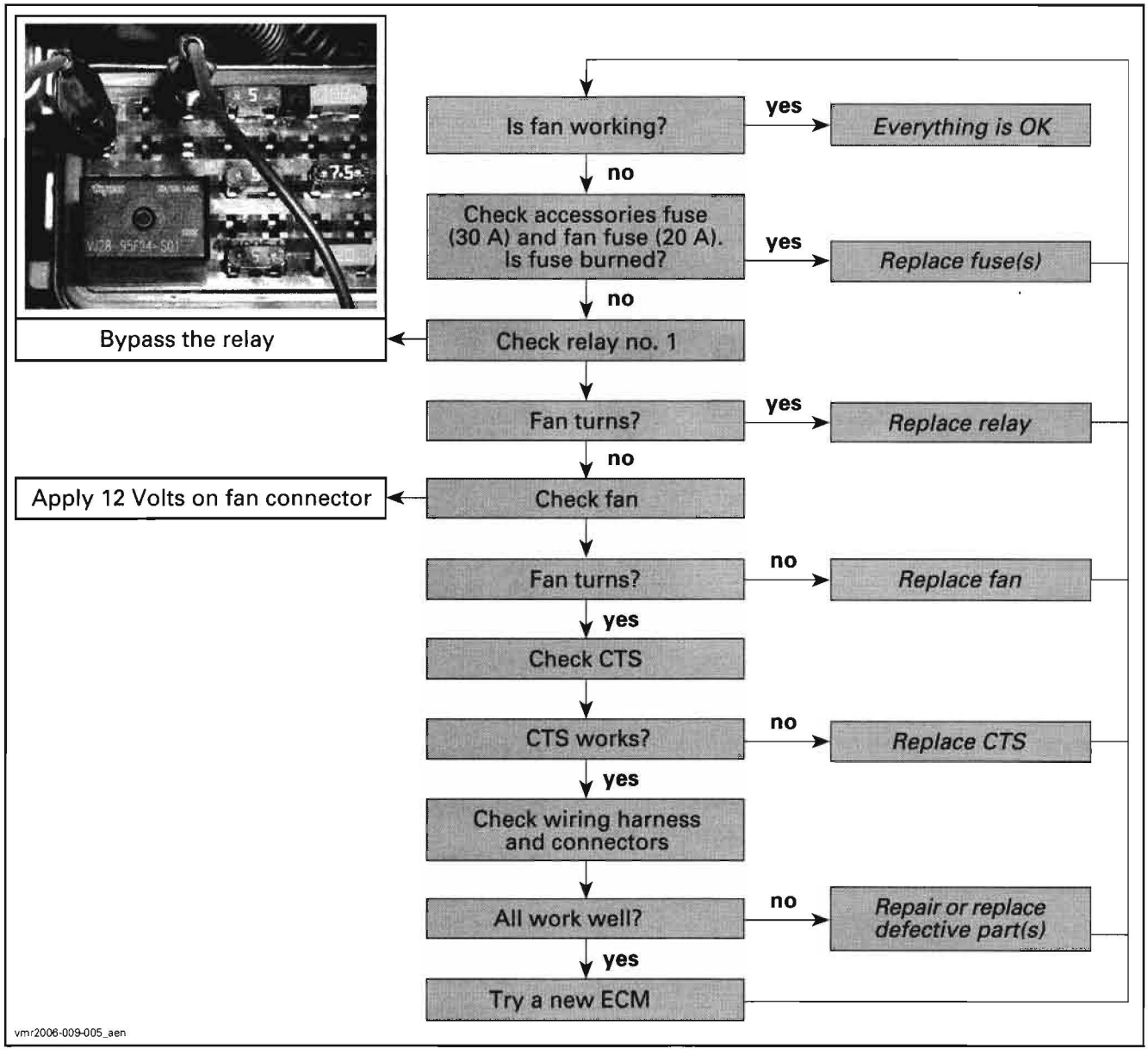

Radiator Fan Removal

Remove radiator shroud.

Remove bolts **no. 13**.

Remove the radiator fan.

Radiator Fan Installation

For the installation, reverse the removal procedure.

WATER PUMP HOUSING

It is located on the engine MAG side.

Water Pump Housing Removal

⚠ WARNING

To avoid potential burns, do not remove the radiator cap or loosen the cooling drain plug if the engine is hot.

Drain cooling system.

Remove radiator outlet hose from water pump housing.

Remove screws retaining water pump housing.

www.midwestmanuals.com
Sales@midwestmanuals.com

www.midwestmanuals.com

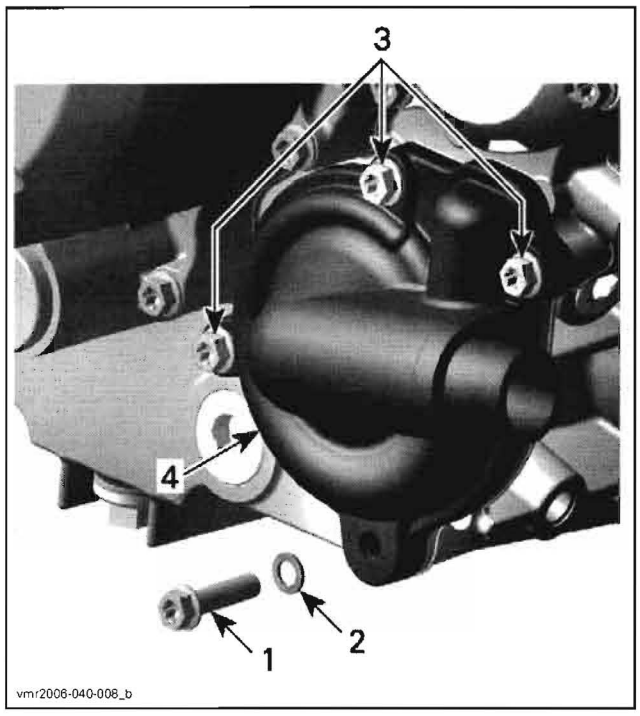

TYPICAL
1. *Cooling drain plug*
2. *Sealing ring*
3. *Screws*
4. *Water pump housing*

Pull water pump housing to remove it.

Water Pump Housing Inspection

Check if gasket is brittle, hard or damaged and replace as necessary.

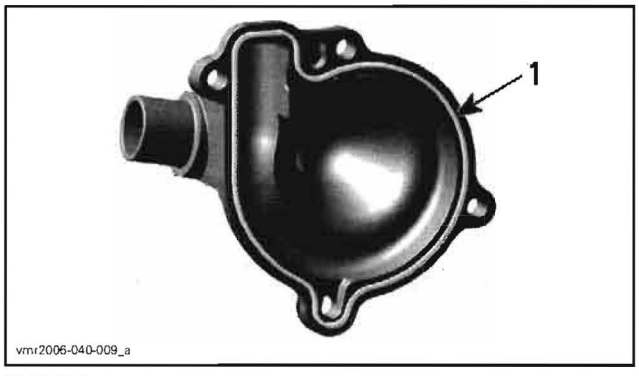

TYPICAL
1. *Gasket*

Water Pump Housing Installation

The installation is the opposite of the removal procedure.

CAUTION: To prevent leaking, take care that the gasket is exactly in groove when you reinstall the water pump housing.

Tighten screws of water pump housing in a criss cross sequence.

WATER PUMP IMPELLER

Impeller Removal

Remove water pump housing.

Unscrew impeller.

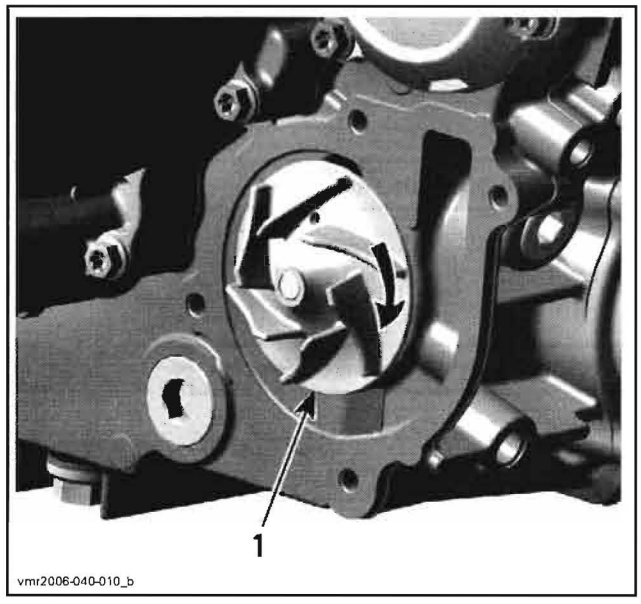

1. *Turn clockwise to unscrew*

CAUTION: Water pump shaft and impeller have right-hand threads. Remove by turning counterclockwise and install by turning clockwise.

Impeller Inspection

Check impeller for cracks or other damage. Replace impeller if damaged.

Impeller Installation

The installation is the opposite of the removal procedure.

CAUTION: Be careful not to damage impeller wings during installation.

WATER PUMP SHAFT AND SEALS

Shaft/Seal Removal

NOTE: It is not required to split crankcase to replace the water pump shaft and seals, but engine removal is necessary.

Drain engine oil. Refer to *LUBRICATION SYSTEM.*

Drain gearbox oil. Refer to *GEARBOX AND 4X4 COUPLING UNIT.*

Remove CVT and inner cover. Refer to *TRANSMISSION* section.

www.midwestmanuals.com
Sales@midwestmanuals.com

www.midwestmanuals.com

Remove engine from vehicle. Refer to *ENGINE REMOVAL AND INSTALLATION* section.

Detach gearbox from engine. Refer to *GEARBOX AND 4X4 COUPLING UNIT*.

Remove engine drive shaft and engine PTO cover. Refer to *BOTTOM END*.

Remove water pump housing and impeller. See procedures in this section.

Pull out water pump gear to disengage the inner drive gear.

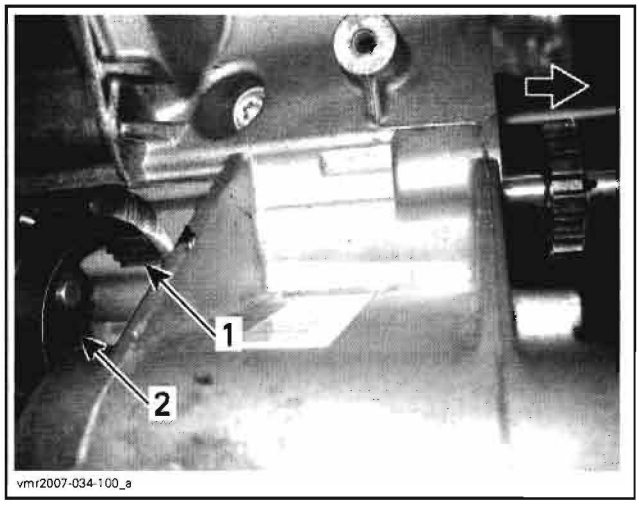

1. *Water pump gear*
2. *Inner drive gear*

Sharply strike water pump shaft out with a plastic hammer.

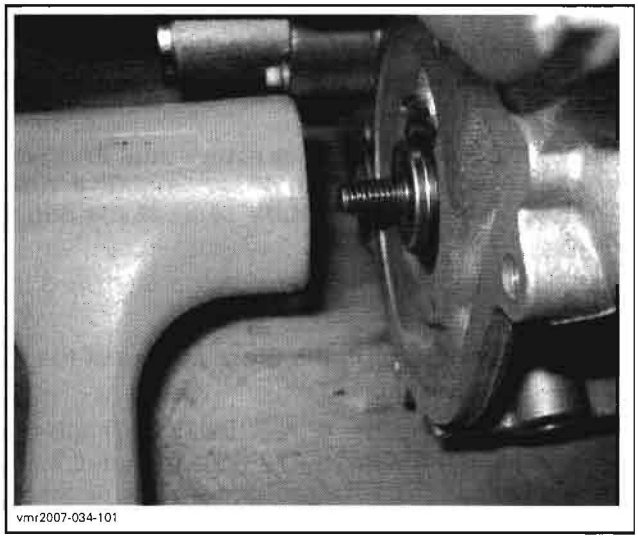

Pull out water pump shaft through the engine drive shaft opening.

NOTE: Pay attention to hold thrust washer to prevent it from falling in crankcase.

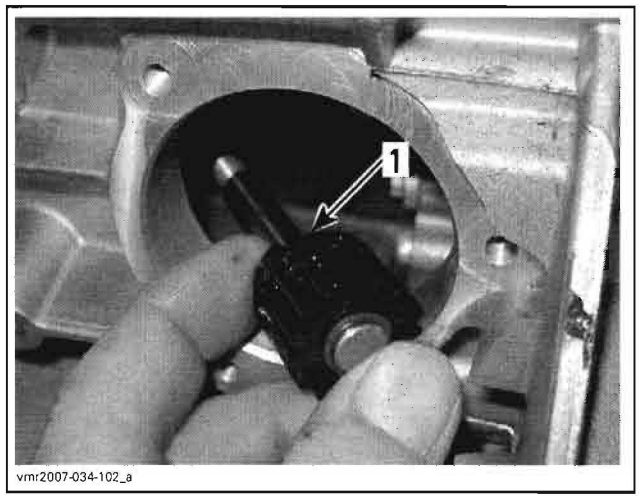

1. *Thrust washer here*

CAUTION: If thrust washer is not on water pump shaft, use a magnet to retrieve it inside crankcase.

Using appropriate pliers, remove and discard the retaining ring securing water pump gear on water pump shaft.

To remove plastic gear from water pump shaft, place gear between your fingers and briskly tap shaft end.

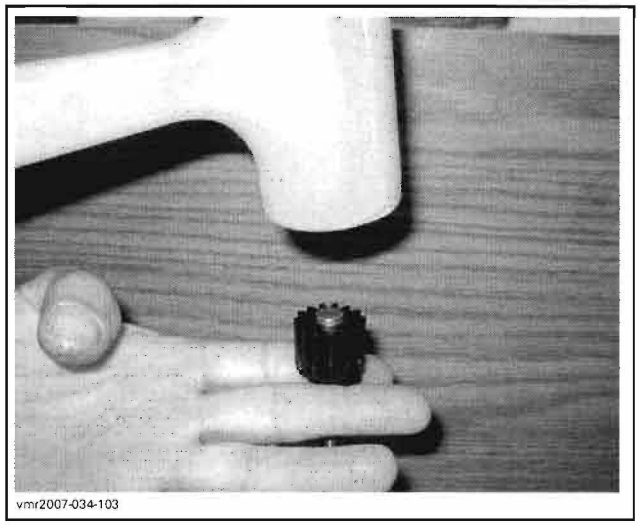

Using 2 screwdrivers, pry out inner part of the rotary seal.

www.midwestmanuals.com
Sales@midwestmanuals.com

www.midwestmanuals.com

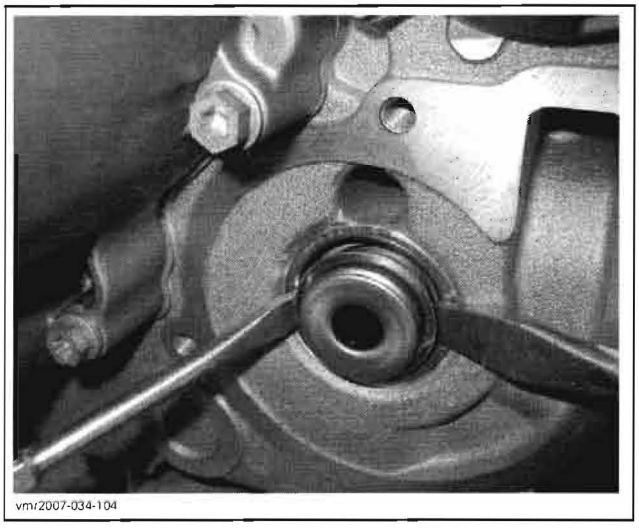
vmr2007-034-104

To remove outer part of rotary seal, use an expander from puller kit (P/N 529 036 056).

Install expander snugly against outer part and pull rotary seal out.

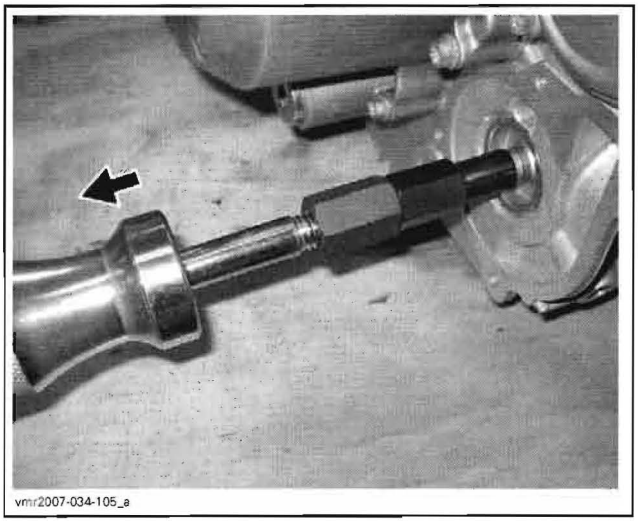
vmr2007-034-105_a

Remove inner oil seal.

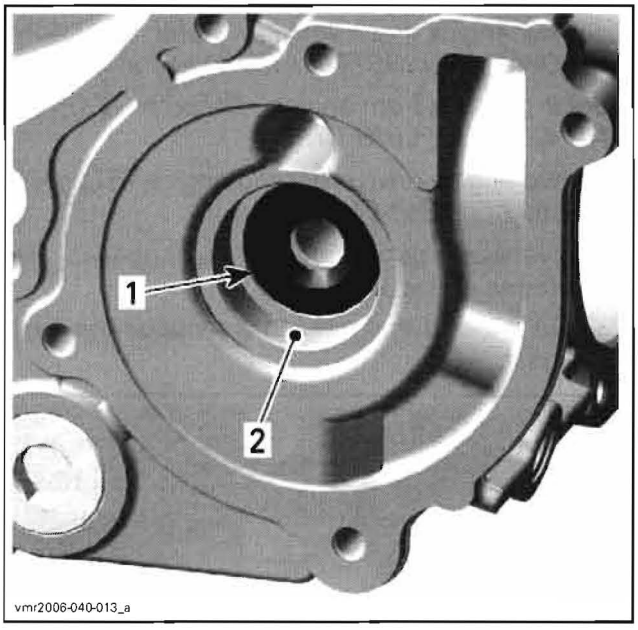

vmr2006-040-013_a

1. Inner oil seal
2. Rotary seal surface

CAUTION: Be careful not to damage the rotary seal surface in crankcase.

Part Inspection

Inspect water pump gear for wear and damage on the snap mechanism to the needle pin. Replace if damaged.

Shaft/Seal Installation

For installation, reverse the removal procedure. However, pay attention to the following.

NOTE: For installation use the torque values in the exploded view. Ensure to use multipurpose grease for oil seal.

CAUTION: Always replace rotary seal and water pump shaft together. Also, install a new inner oil seal (behind rotary seal) at the same time.

Apply engine oil on the water pump shaft and intermediate shaft.

NOTE: Never use oil in the press fit area of the oil seal and rotary seal.

Use the oil seal pusher (P/N 529 035 757) and the installer handle (P/N 420 877 650) to install inner oil seal.

www.midwestmanuals.com
Sales@midwestmanuals.com

www.midwestmanuals.com

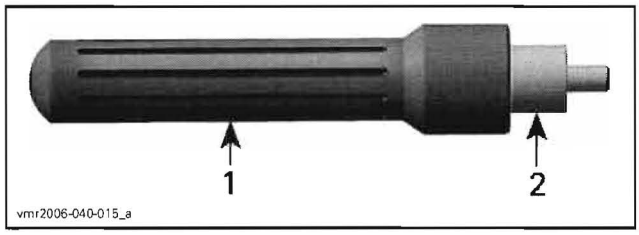

1. Handle
2. Pusher

Apply Molykote 111 (P/N 413 707 000) inside lips of oil seal.

When installing the oil seal on the pusher, make sure sealing lip points outside.

Push inner oil seal in place.

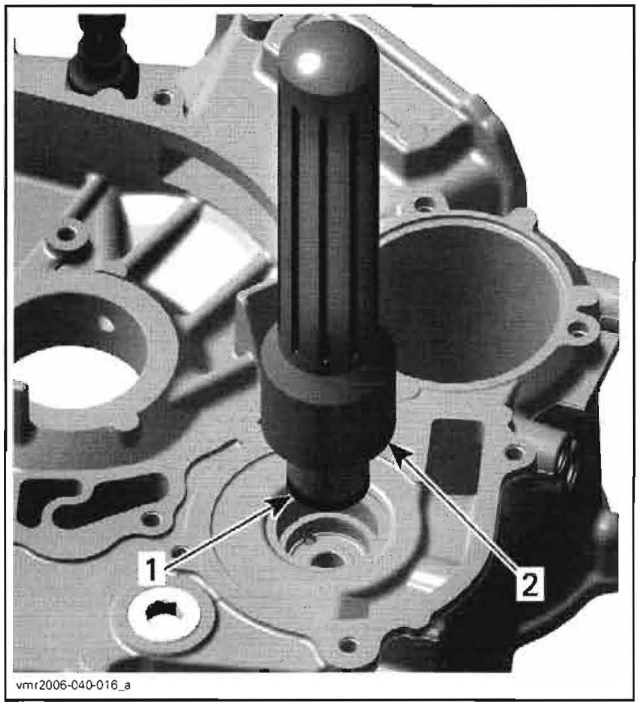

1. Inner oil seal
2. Installer handle with oil seal pusher

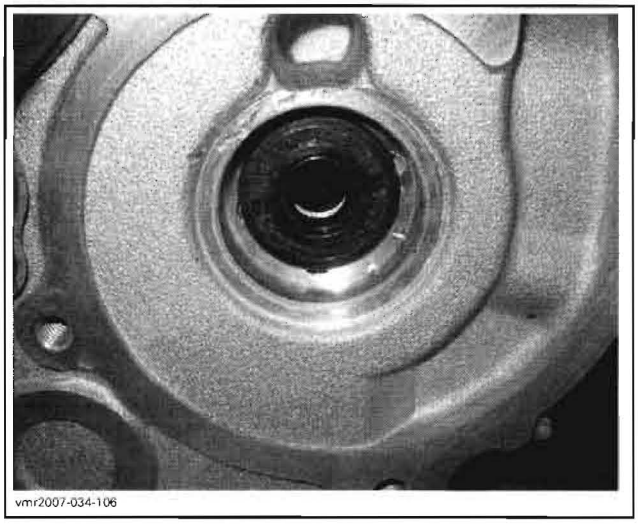

Slide water pump shaft with the new rotary seal into crankcase.

To properly install water pump shaft with rotary seal, use the rotary seal installer (P/N 529 035 766).

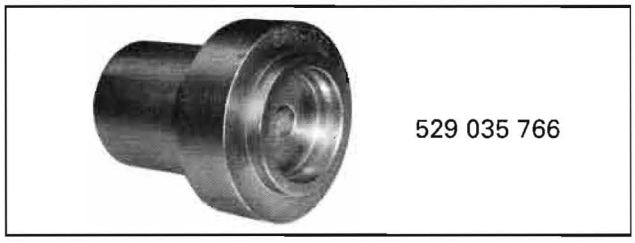

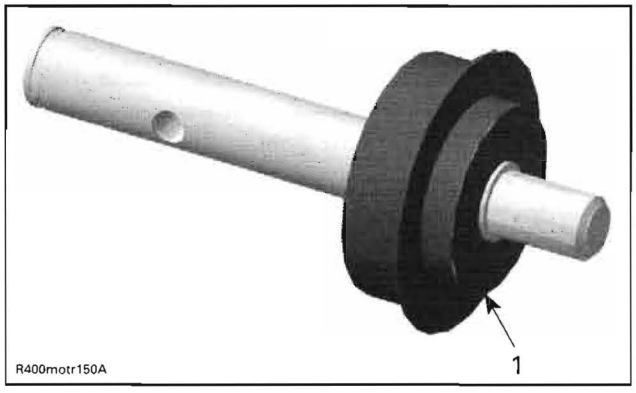

1. Surface where rotary seal is pushed by tool

Use a plastic hammer and drive rotary seal into crankcase.

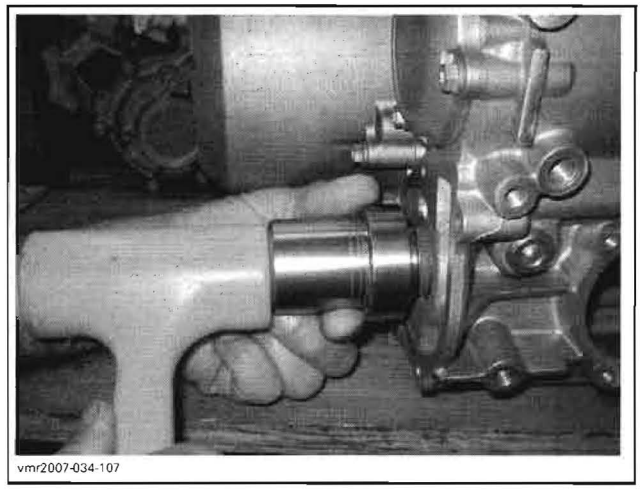

From engine drive shaft opening, insert thrust washer on water pump shaft in crankcase.

Using a flashlight and a mirror, position shaft hole so that pin can be installed.

Position pin between your fingers, push in water pump shaft to fully expose hole then install pin.

Position pin at equal distance out of shaft hole so gear can be installed.

www.midwestmanuals.com
Sales@midwestmanuals.com

www.midwestmanuals.com

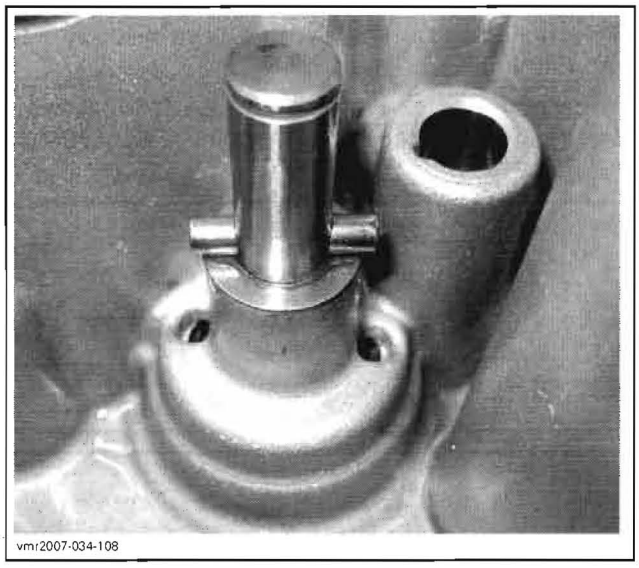
vmr2007-034-108

Install water pump shaft gear.

NOTE: Ensure gear properly snaps on pin. A screwdriver may have to be used to push gear in place.

Use a 45° snap-ring pliers and install a NEW retaining ring on pump shaft end.

CAUTION: Never use the retaining ring a second time. Always install a new one.

After installation, water pump shaft with rotary seal must rotate freely.

Carefully push in water pump gear while turning to mesh with the inner drive gear.

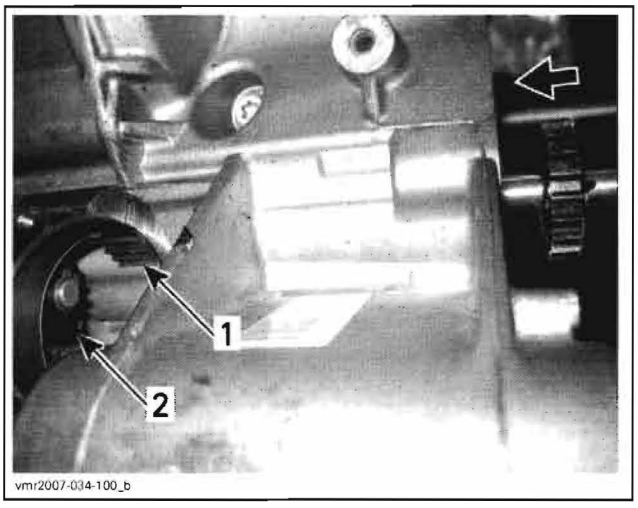

vmr2007-034-100_b

1. Water pump gear
2. Inner drive gear

Tighten screws of the water pump housing crosswise.

Properly reinstall remaining parts. Refer to appropriate sections.

Refill all fluids.

www.midwestmanuals.com
Sales@midwestmanuals.com

www.midwestmanuals.com

MAGNETO SYSTEM

SERVICE TOOLS

Description	Part Number	Page
crankshaft locking bolt	529 035 617	75
magneto puller	529 035 748	75
crankshaft protector	529 036 034	75

SERVICE PRODUCTS

Description	Part Number	Page
Loctite 767 (antiseize lubricant)	293 800 070	78
pulley flange cleaner	413 701 809	75
Loctite Chisel (gasket remover)	413 708 500	73
Loctite 648 (green)	413 711 400	77
Drei Bond sealing compound	420 297 906	73



sales@midwestmanuals.com
www.midwestmanuals.com

www.midwestmanuals.com
Sales@midwestmanuals.com

www.midwestmanuals.com

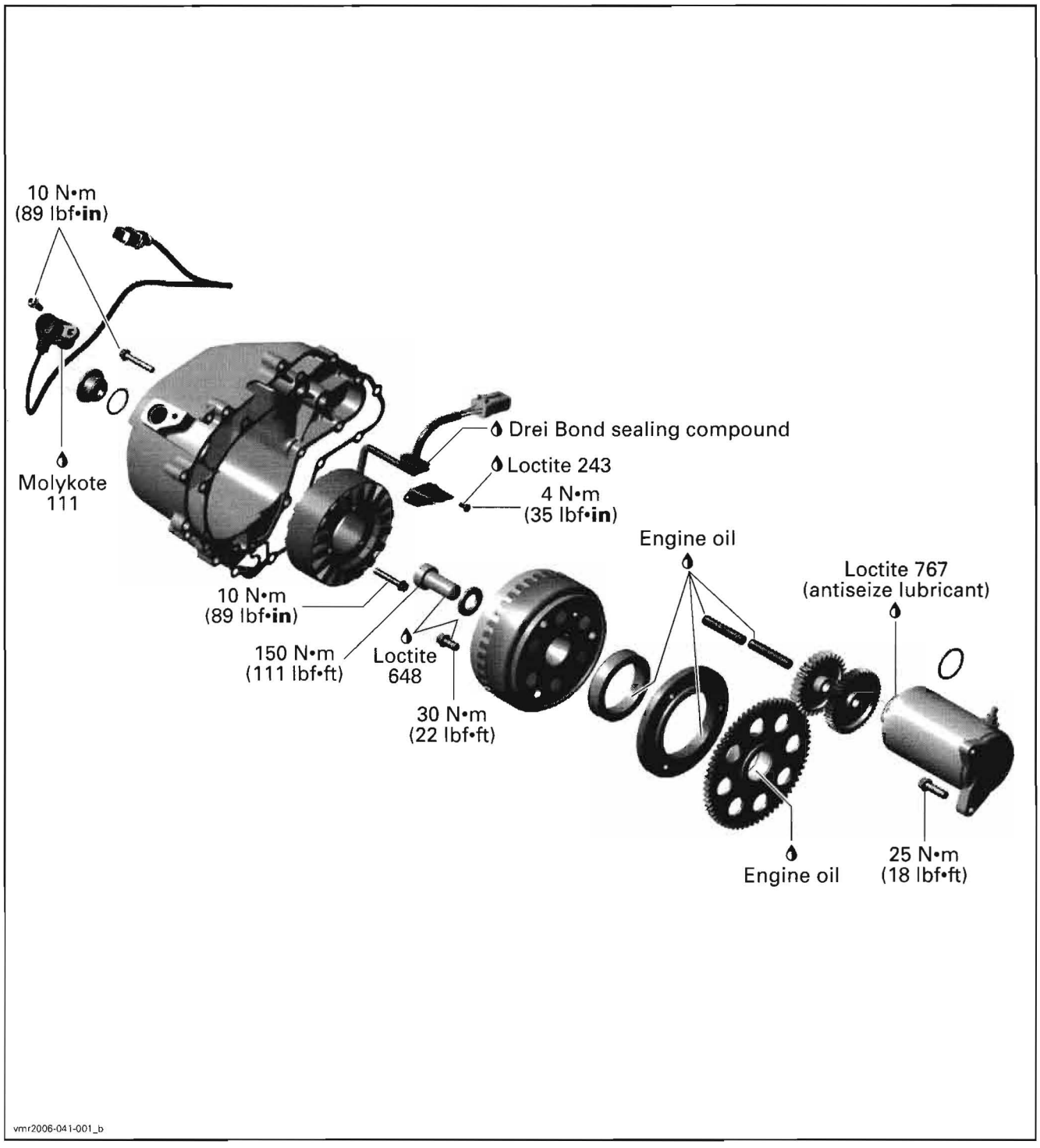

www.midwestmanuals.com
Sales@midwestmanuals.com

www.midwestmanuals.com

GENERAL

Always perform the electric tests before removing or installing whatever component.

During assembly/installation, use the torque values and service products as in the exploded view.

Clean threads before applying threadlocker. Refer to *SELF-LOCKING FASTENERS* and *LOCTITE APPLICATION* at the beginning of this manual for complete procedure.

⚠ WARNING

Torque wrench tightening specifications must strictly be adhered to.
Locking devices (e.g.: locking tabs, elastic stop nuts, self-locking fasteners, cotter pins, etc.) must be installed or replaced with new ones where specified. If the efficiency of a locking device is impaired, it must be renewed.

PROCEDURES

MAGNETO COVER

Magneto Cover Removal

Drain engine oil (refer to *LUBRICATION SYSTEM*).

Remove plastic cover.

Remove crankshaft position sensor (CPS) and cut tie raps.

Disconnect magneto connector.

Remove dipstick.

Remove magneto cover retaining screws.

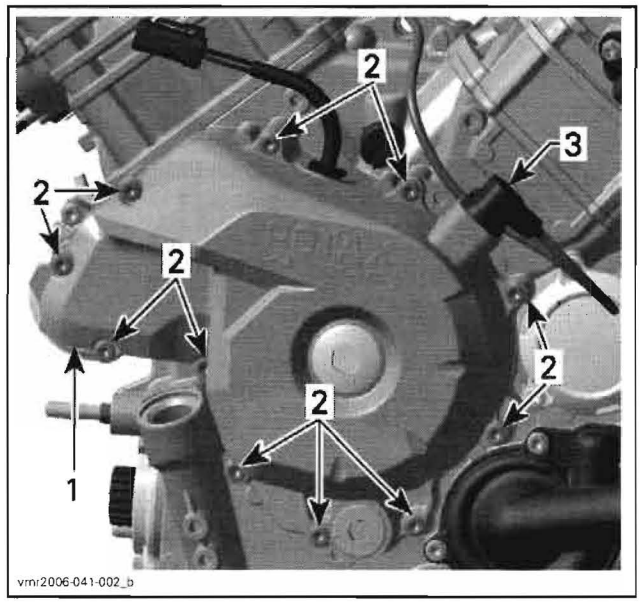

1. *Magneto cover*
2. *Retaining screws*
3. *Crankshaft position sensor*

Pull out magneto cover.

Magneto Cover Inspection and Cleaning

Check magneto cover for cracks or other damage. Replace if necessary.

NOTE: Clean all metal components in a non-ferrous metal cleaner. Use Loctite Chisel (gasket remover) (P/N 413 708 500), or suitable equivalent.

⚠ WARNING

Wear safety glasses and work in a well ventilated area when working with strong chemical products. Also wear suitable non-absorbent gloves to protect your hands.

Magneto Cover Installation

For installation, reverse the removal procedure. However, pay attention to the following.

NOTE: At installation replace magneto cover gasket.

Apply Drei Bond sealing compound (P/N 420 297 906) on stator cable grommet as shown in next illustration.

www.midwestmanuals.com
Sales@midwestmanuals.com

www.midwestmanuals.com

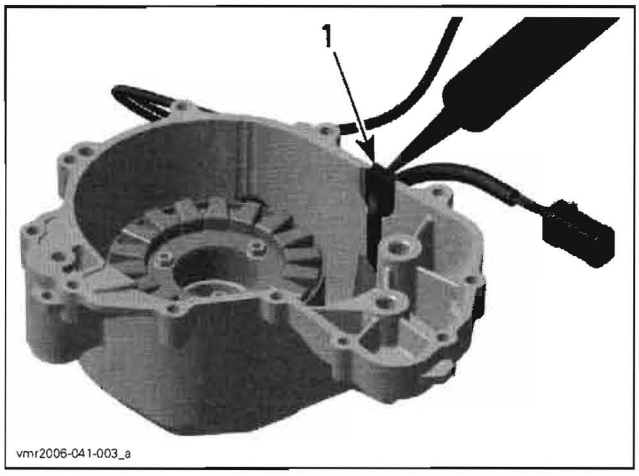

1. *Apply Drei Bond sealing compound*

Tightening sequence for screws on magneto cover is as per following illustration.

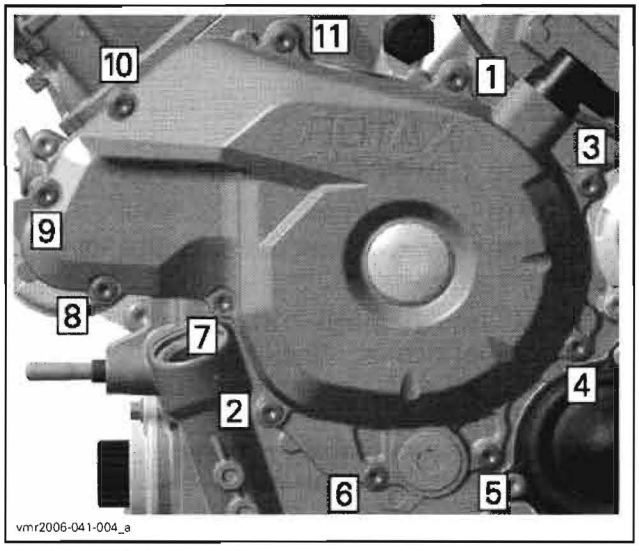

TIGHTENING SEQUENCE

Refill engine with recommended oil.

STATOR

Stator Removal

Remove magneto cover (refer to *MAGNETO COVER* above).

Remove screws securing holding strip.

Remove stator retaining screws then the stator.

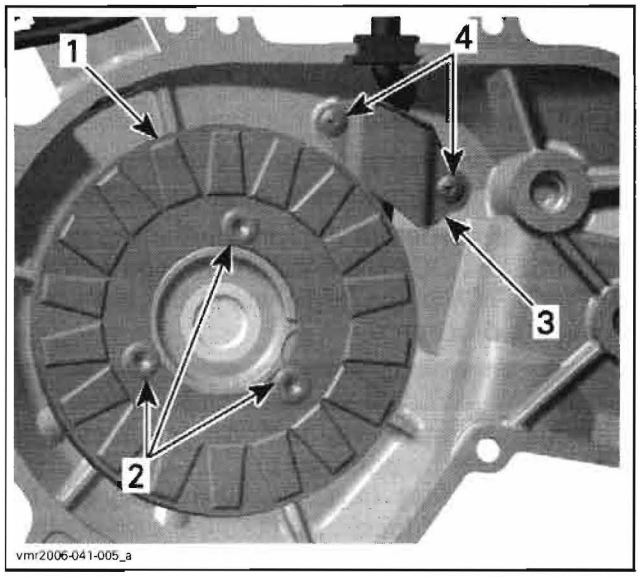

1. *Stator*
2. *Stator retaining screws*
3. *Holding strip*
4. *Holding strip screws*

Stator Inspection

Check stator condition. If damaged replace it.

Check if stator wires are brittle, hard or otherwise damaged.

For electrical inspection, refer to *CHARGING SYSTEM*.

Stator Installation

For installation, reverse the removal procedure. However, pay attention to the following.

CAUTION: When installing the stator take care that the cable is in place (guide for the wire).

NOTE: There is only one position for the stator (notch in the magneto housing cover).

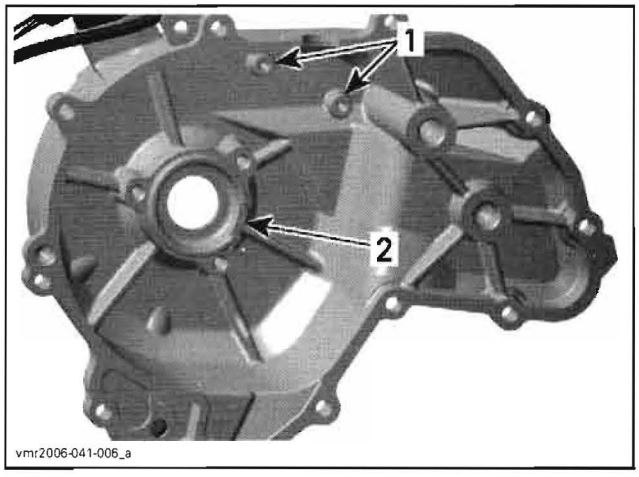

1. *Threads for cable holding strip*
2. *Notch for stator*

www.midwestmanuals.com
Sales@midwestmanuals.com

www.midwestmanuals.com

ROTOR

Rotor Removal

Lock crankshaft with crankshaft locking bolt (P/N 529 035 617) (refer to *BOTTOM END*).

Remove magneto cover. Refer to *MAGNETO COVER* above.

Remove screw and washer securing rotor to crankshaft.

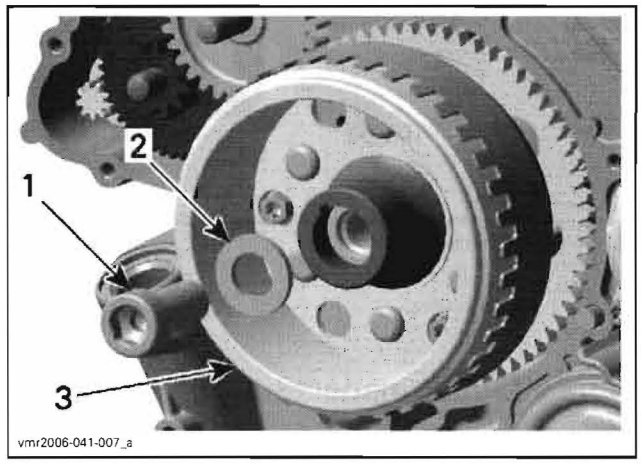

1. Screw M16
2. Washer
3. Rotor

Install magneto puller (P/N 529 035 748) and crankshaft protector (P/N 529 036 034) then remove rotor.

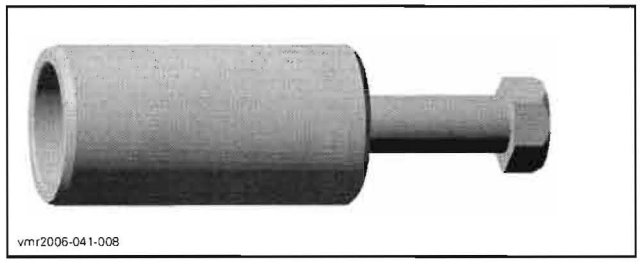

MAGNETO PULLER

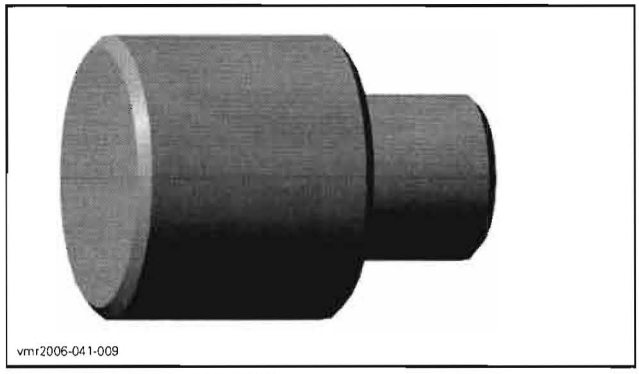

CRANKSHAFT PROTECTOR

NOTE: Use grease to place protector on crankshaft end prior to screw on the magneto puller.

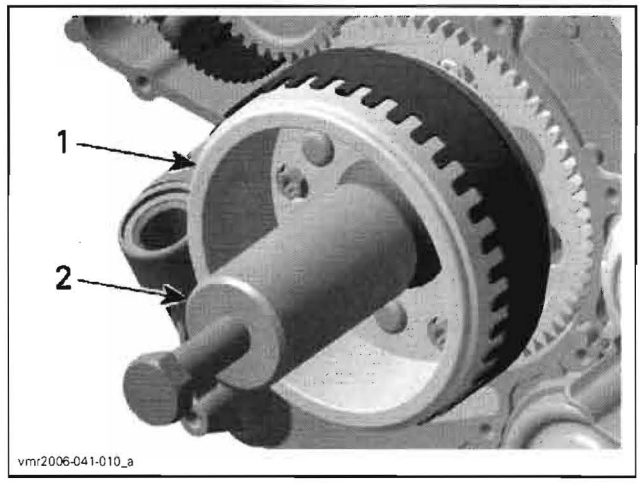

1. Rotor
2. Magneto puller

Screw magneto puller bolt to remove rotor.

Rotor Inspection

Check inner side of rotor for scratches or other damage.

Check keyway of the rotor for wear or damages.

Check if trigger wheel teeth are bent or otherwise damaged.

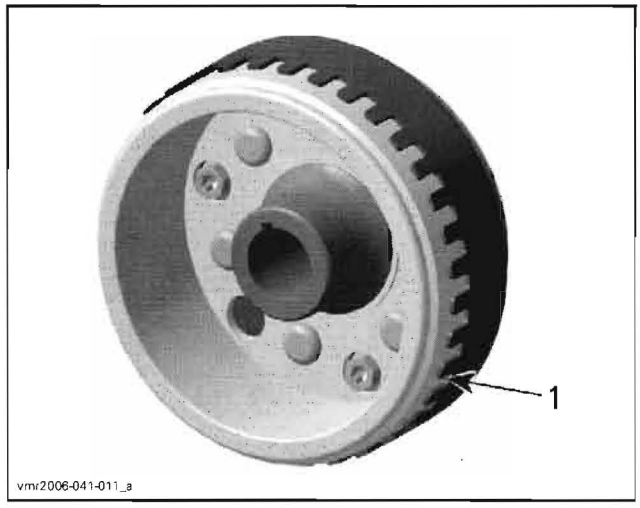

1. Rotor with trigger wheel

Check woodruff key and keyway on the crankshaft for wear or damages.

Replace parts as necessary.

Rotor Installation

For installation, reverse the removal procedure. However, pay attention to the following.

Clean crankshaft taper and rotor with pulley flange cleaner (P/N 413 701 809).

CAUTION: Taper on crankshaft and rotor must be free of grease.

www.midwestmanuals.com
Sales@midwestmanuals.com

www.midwestmanuals.com

Oil sprag clutch in sprag clutch housing and install sprag clutch gear.

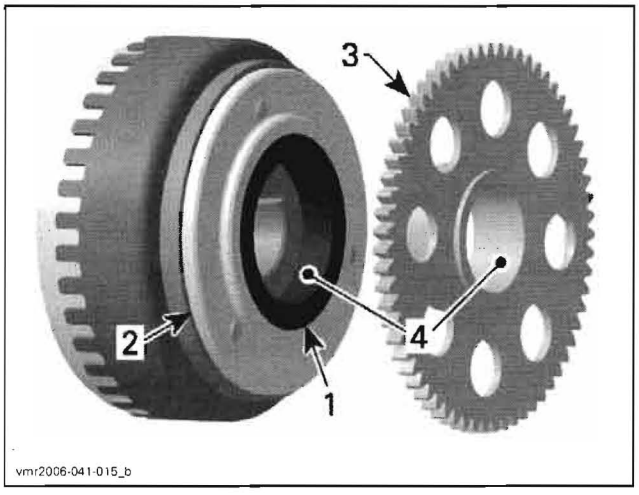

1. *Sprag clutch*
2. *Sprag clutch housing*
3. *Sprag clutch gear*
4. *Apply engine oil here*

Slide rotor onto crankshaft. The woodruff key and the keyway must be aligned.

Rotate starter double gear counterclockwise to align intermediate gear teeth with sprag clutch gear.

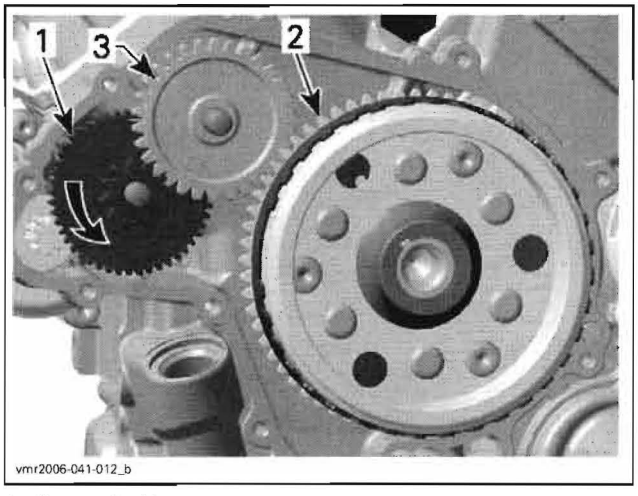

1. *Starter double gear*
2. *Sprag clutch gear*
3. *Intermediate gear*

SPRAG CLUTCH

Sprag Clutch Removal

Remove magneto cover (refer to *MAGNETO COVER* above).

Loosen sprag clutch housing screws located inside rotor.

Remove rotor (refer to *ROTOR* above).

Remove sprag clutch gear.

Remove sprag clutch housing screws and sprag clutch housing.

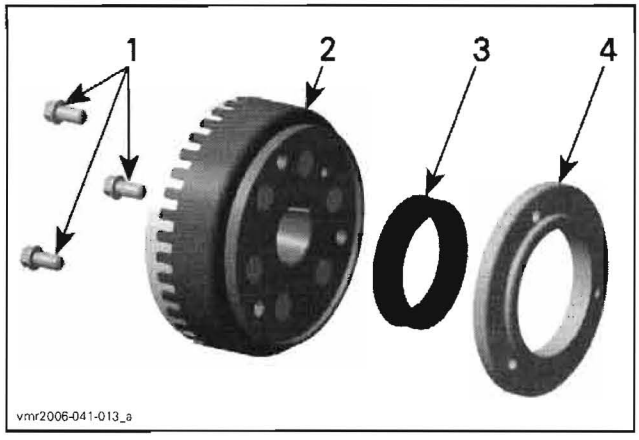

1. *Sprag clutch housing screws*
2. *Rotor*
3. *Sprag clutch*
4. *Sprag clutch housing*

Sprag Clutch Inspection

Inspect sprag clutch and sprag clutch housing for wear and damage.

Also check the collar of the sprag clutch gear.

Perform a functional test of the sprag clutch. To do so, rotate sprag clutch gear in sprag clutch.

NOTE: Sprag clutch must lock in counterclockwise direction.

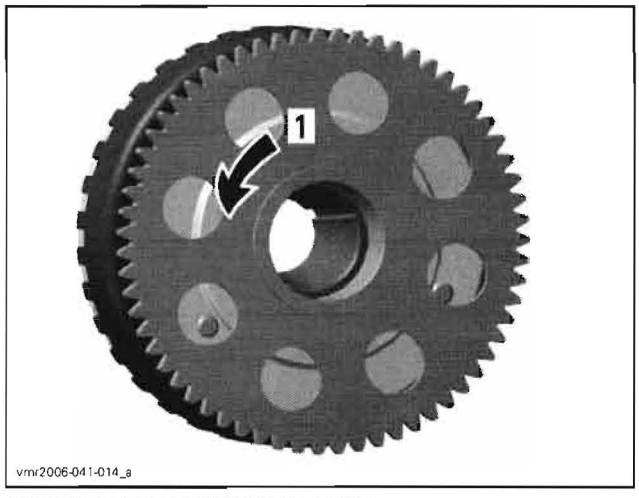

SPRAG CLUTCH FUNCTIONAL TEST
1. *Lock*

NOTE: Sprag clutch, housing and gear must be replaced at the same time, if damaged.

Sprag Clutch Installation

For installation, reverse the removal procedure. Pay attention to the following details.

www.midwestmanuals.com
Sales@midwestmanuals.com

www.midwestmanuals.com

Apply Loctite 648 (green) (P/N 413 711 400) on threads of sprag clutch housing screws.

Install screws but do not torque yet.

Apply engine oil on sprag clutch and inside sprag clutch gear hole.

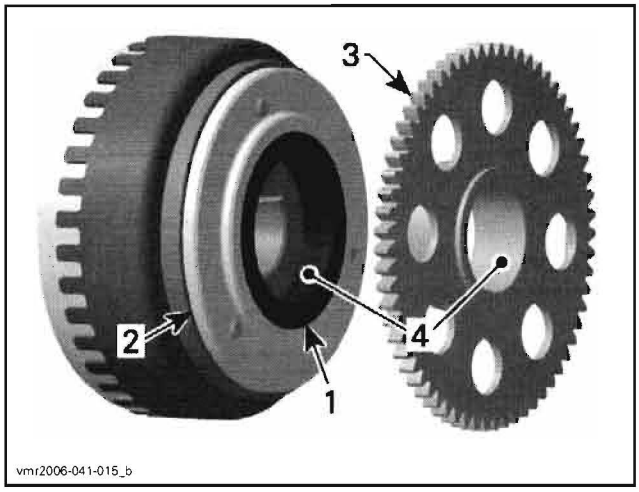

1. Sprag clutch
2. Sprag clutch housing
3. Sprag clutch gear
4. Apply engine oil here

Install rotor then torque sprag clutch housing screws to 30 N•m (22 lbf•ft).

SPRAG CLUTCH GEAR

Sprag Clutch Gear Removal

Remove rotor (refer to *ROTOR* above).

Pull sprag clutch gear from the rotor.

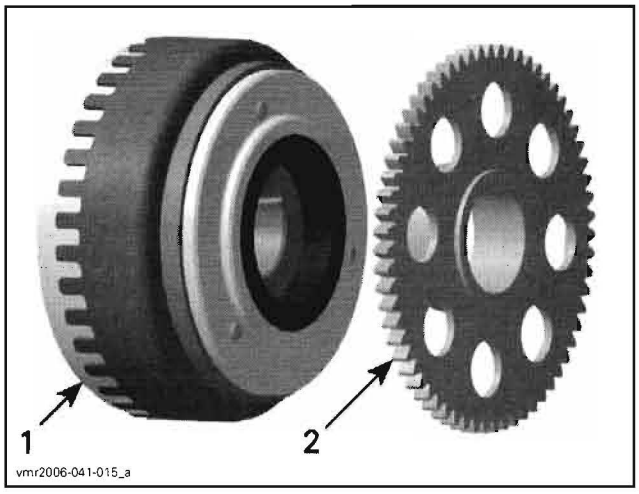

1. Rotor
2. Sprag clutch gear

Sprag Clutch Gear Inspection

Inspect gear, especially teeth and sprag clutch collar, for wear and other damage.

Check needle bearing condition. Replace sprag clutch gear if necessary.

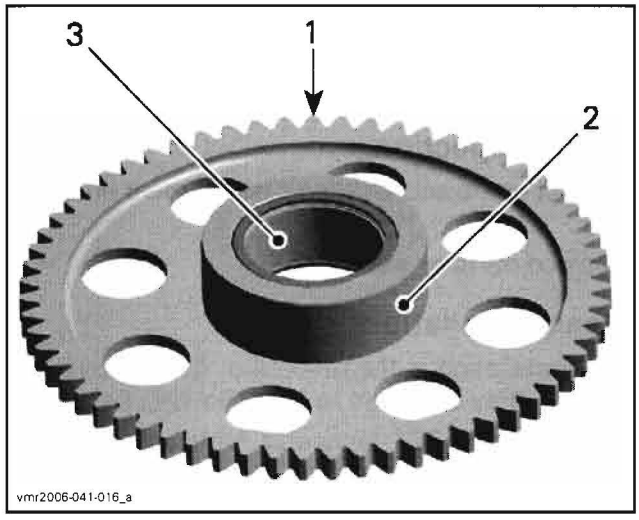

INSPECT
1. Teeth
2. Collar
3. Needle bearing

Sprag Clutch Gear Installation

The installation is the reverse of the removal procedure.

NOTE: Apply engine oil on needle bearing and collar of sprag clutch gear.

STARTER DRIVE GEARS

The starter drive gears are located on the engine MAG side behind the magneto cover.

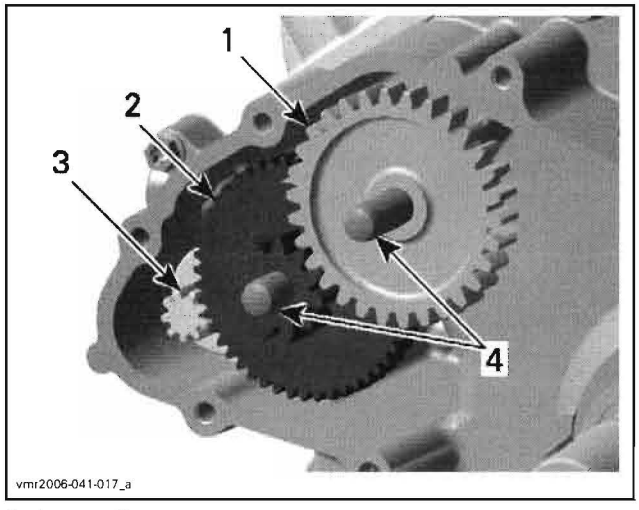

1. Intermediate gear
2. Starter double gear
3. Starter gear
4. Location pins

www.midwestmanuals.com
Sales@midwestmanuals.com

www.midwestmanuals.com

Gear Removal

Remove magneto cover (refer to *MAGNETO COVER* above).

Remove location pins, starter double gear and intermediate gear.

Gear Inspection

Inspect gears and location pins for wear and damage.

Replace parts as necessary.

Gear Installation

The installation is the reverse of the removal procedure. Pay attention to the following details.

Apply Loctite 767 (antiseize lubricant) (P/N 293 800 070) on starter gear before installing the starter double gear.

Apply engine oil on location pins.

www.midwestmanuals.com
Sales@midwestmanuals.com

www.midwestmanuals.com

INTAKE MANIFOLD, CYLINDER HEAD AND CYLINDER

SERVICE TOOLS

Description	Part Number	Page
dial gauge	414 104 700	86
crankshaft locking bolt	529 035 617	97, 106
valve spring compressor clamp	529 035 724	100
valve spring compressor cup	529 035 764	100
valve guide installer	529 035 853	104
Piston ring compressor	529 035 919	106
Circlip installer	529 035 921	110
valve guide remover	529 035 924	104
camshaft locking tool	529 035 926	86, 90
Piston ring compressor	529 035 977	106
Circlip installer	529 036 058	110

SERVICE TOOLS – OTHER SUPPLIER

Description	Part Number	Page
Snap-on pliers	YA 8230	102

SERVICE PRODUCTS

Description	Part Number	Page
Loctite 767 (antiseize lubricant)	293 800 070	104

www.midwestmanuals.com
Sales@midwestmanuals.com

www.midwestmanuals.com

INTAKE MANIFOLD

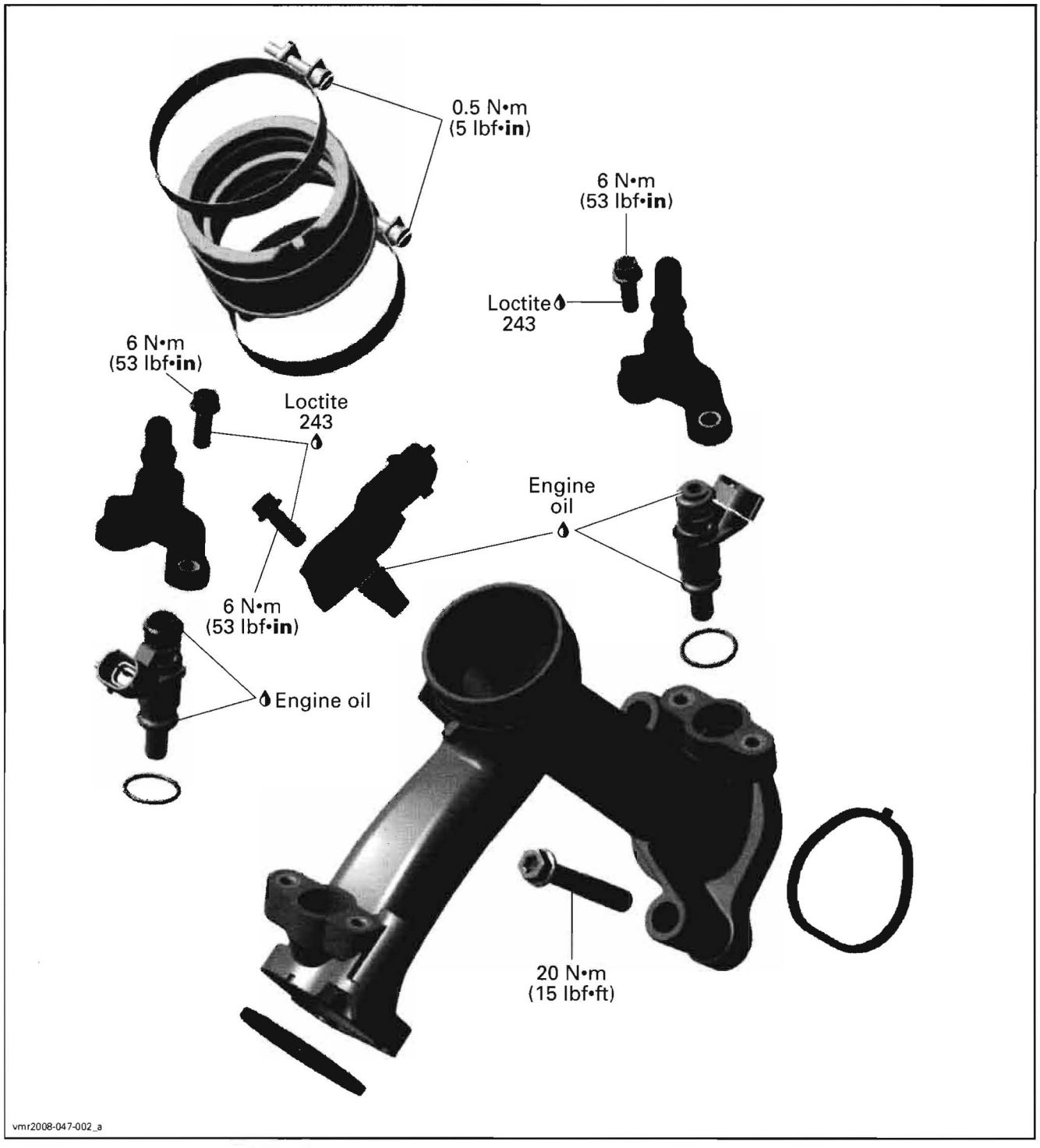

www.midwestmanuals.com
Sales@midwestmanuals.com

www.midwestmanuals.com

CYLINDER HEAD NO. 1

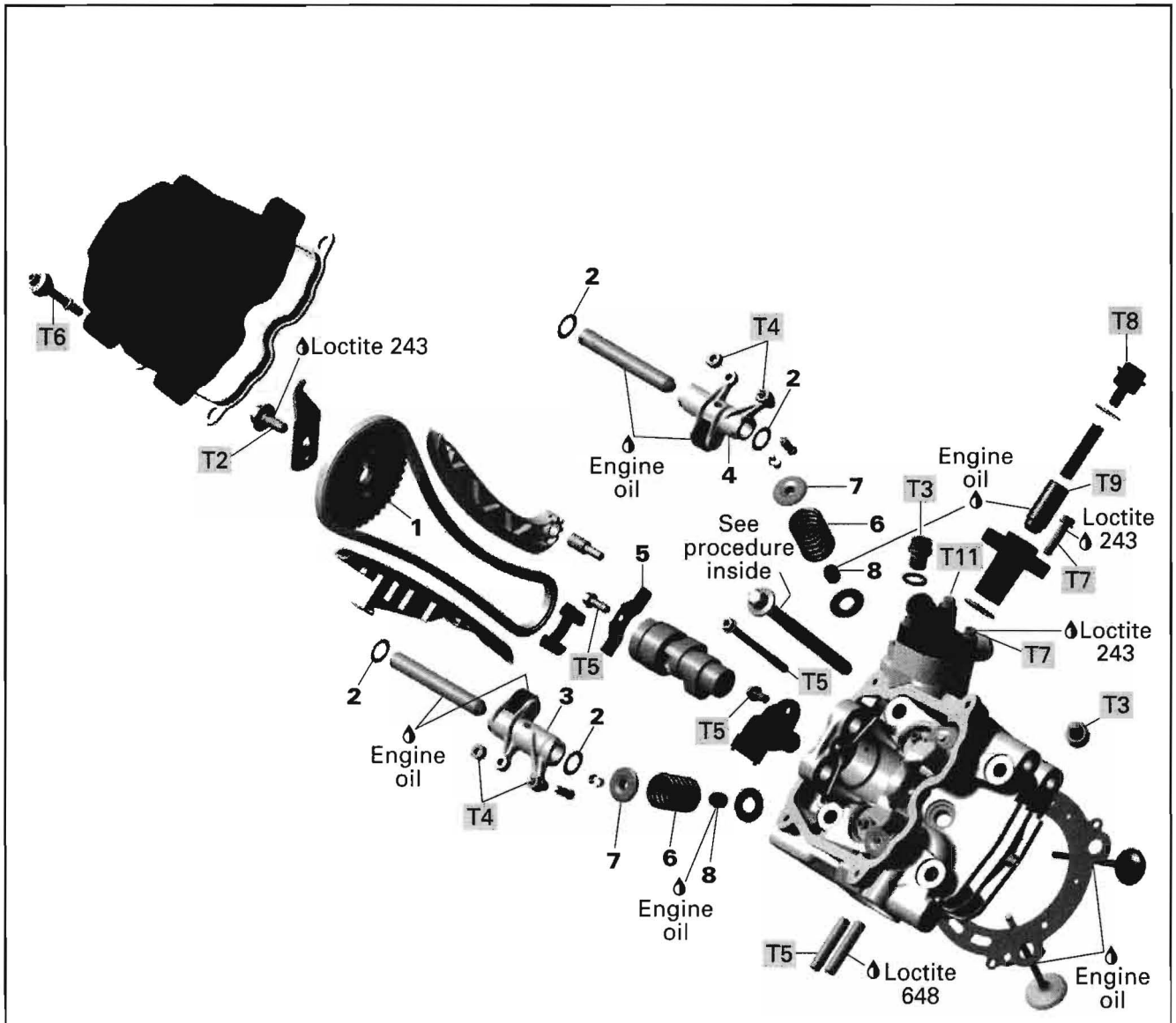

T1	60 N•m (44 lbf•ft)
T2	30 N•m (22 lbf•ft)
T3	20 N•m (15 lbf•ft)
T4	12 N•m (106 lbf•**in**)
T5	10 N•m (89 lbf•**in**)
T6	7 N•m (62 lbf•**in**)

T7	6 N•m (53 lbf•**in**)
T8	4.5 N•m (40 lbf•**in**)
T9	0.1 N•m (0.89 lbf•**in**)
T10	16 N•m (141 lbf•**in**)
T11	5 N•m (44 lbf•**in**)

vmr2007-036-001_a

www.midwestmanuals.com
Sales@midwestmanuals.com

www.midwestmanuals.com

CYLINDER HEAD NO. 2

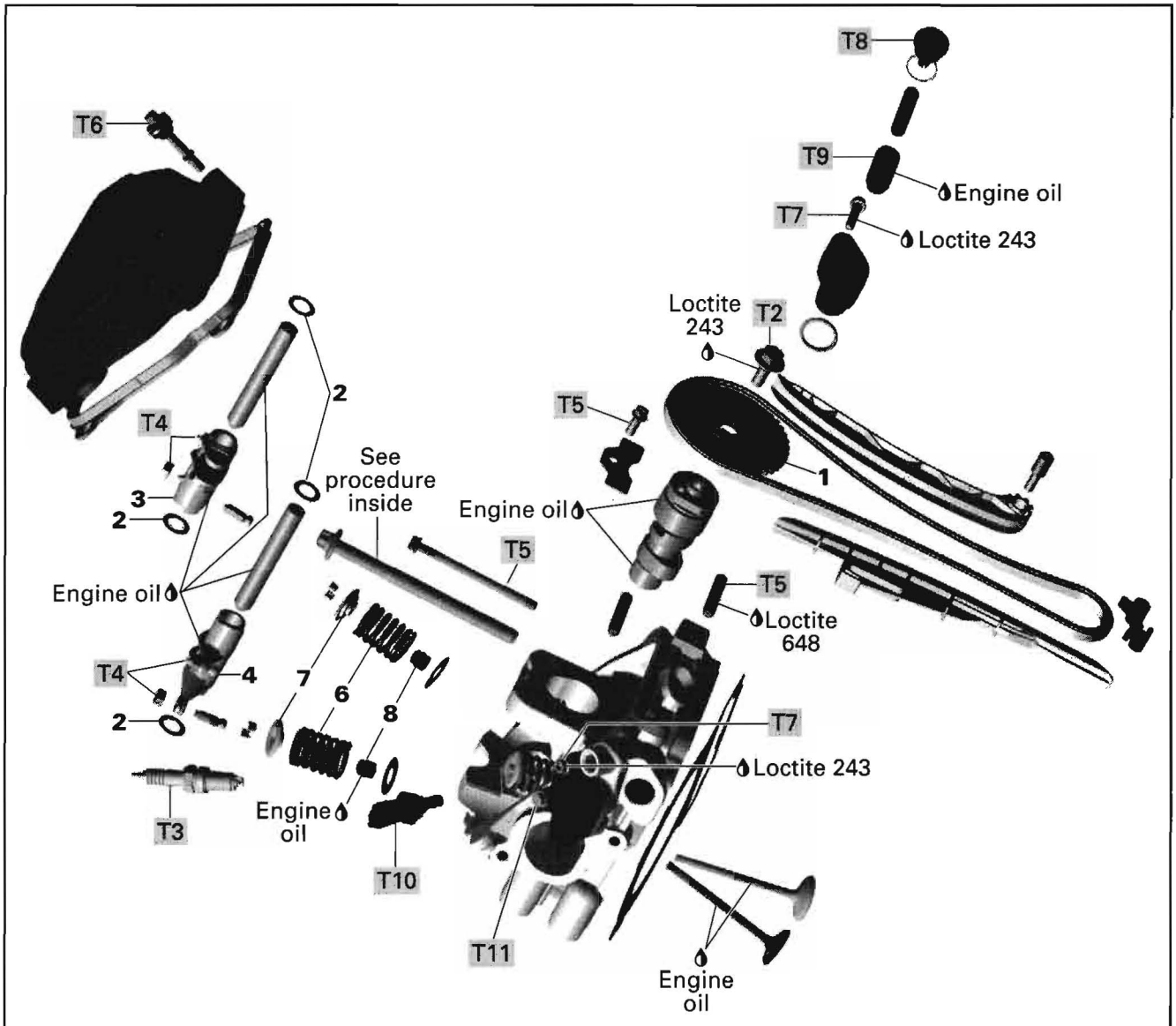

T1	60 N•m (44 lbf•ft)
T2	30 N•m (22 lbf•ft)
T3	20 N•m (15 lbf•ft)
T4	12 N•m (106 lbf•**in**)
T5	10 N•m (89 lbf•**in**)
T6	7 N•m (62 lbf•**in**)

T7	6 N•m (53 lbf•**in**)
T8	4.5 N•m (40 lbf•**in**)
T9	0.1 N•m (0.89 lbf•**in**)
T10	16 N•m (141 lbf•**in**)
T11	5 N•m (44 lbf•**in**)

vmr2007-036-002_a

www.midwestmanuals.com
Sales@midwestmanuals.com

www.midwestmanuals.com

CYLINDERS AND PISTONS

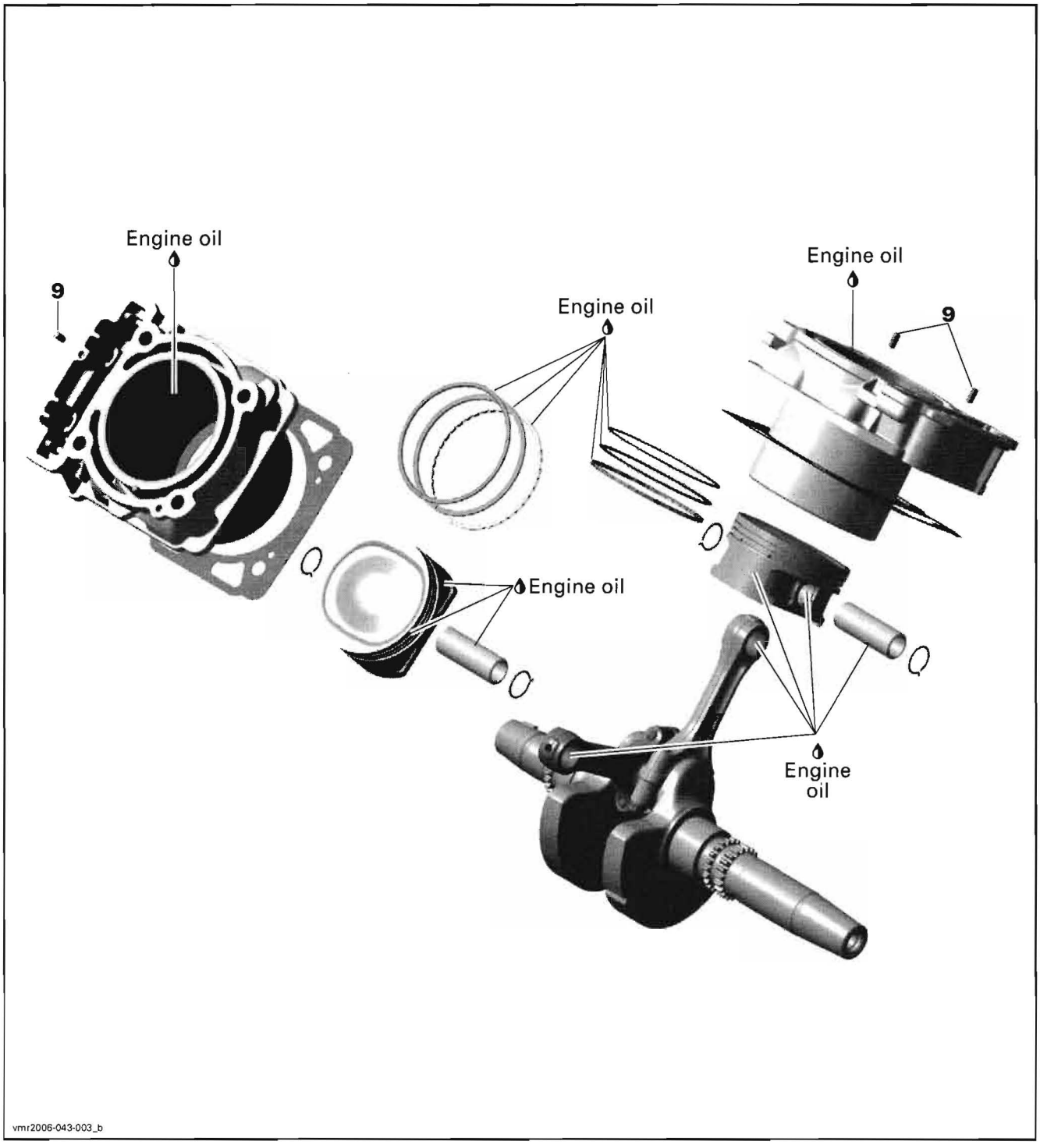

www.midwestmanuals.com
Sales@midwestmanuals.com

www.midwestmanuals.com

GENERAL

Components which are identical for both cylinders/cylinder heads are identified in the two exploded views by the same number. Components which are different or which are, for instance, present of one of the cylinders/cylinder heads but not on the other, have different numbers. The information given below always relates as a general rule.

Special reference is made in the text to work instructions which are not the same for cylinder no. 1 and cylinder no. 2.

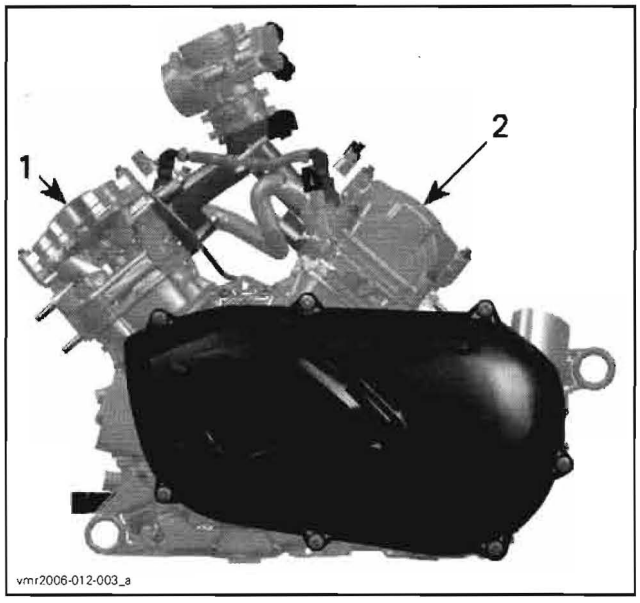

1. *Cylinder 1 (front)*
2. *Cylinder 2 (rear)*

When diagnosing an engine problem, always perform a cylinder leak test.

Always place the vehicle on level surface.

NOTE: For a better understanding, the many illustrations are taken with engine out of vehicle. To perform the following instructions, it is not necessary to remove engine from vehicle.

Always disconnect BLACK (-) cable from the battery, then RED (+) cable before working on the engine.

Even if the removal of many parts is not necessary to reach another part, it is recommended to remove these parts in order to check them.

During assembly/installation, use the torque values and service products as in the exploded views.

Clean threads before applying a threadlocker. Refer to *SELF-LOCKING FASTENERS* and *LOCTITE APPLICATION* at the beginning of this manual for complete procedure.

⚠ WARNING

Torque wrench tightening specifications must strictly be adhered to.
Locking devices (e.g.: locking tabs, elastic stop nuts, cotter pin, etc.) must be replaced with new ones.

When disassembling parts that are duplicated in the engine, (e.g.: valves), it is a strongly recommended to note their position (PTO/MAG side, front/rear cylinder) and to keep them as a "group". If you find a defective component, it would be much easier to find the cause of the failure among its group of parts (e.g.: you found a worn valve guide. A bent spring could be the cause and it will be easy to know which one among the springs is the cause to replace it if you grouped them at disassembly). Also, since used parts have matched together during the engine operation, they will keep their matched fit when you reassemble them together within their "group".

MAINTENANCE

VALVE ADJUSTMENT

NOTE: Check and adjust valve clearance only when engine is cold.

Remove valve covers.

Before checking or adjusting the valve clearance, turn crankshaft to TDC ignition of the respective cylinder, see *CAMSHAFT*.

Using feeler gauge, check the valve clearance.

VALVE CLEARANCE	
EXHAUST	0.11 to 0.19 mm (.0043 to .0075 in)
INTAKE	0.06 to 0.14 mm (.0024 to .0055 in)

If the valve clearance is out of specification, adjust valves as follows.

NOTE: Use mean value of exhaust/intake to ensure a proper valve adjustment.

Hold the adjustment screw at the proper position and torque the locking nut.

www.midwestmanuals.com
Sales@midwestmanuals.com

www.midwestmanuals.com

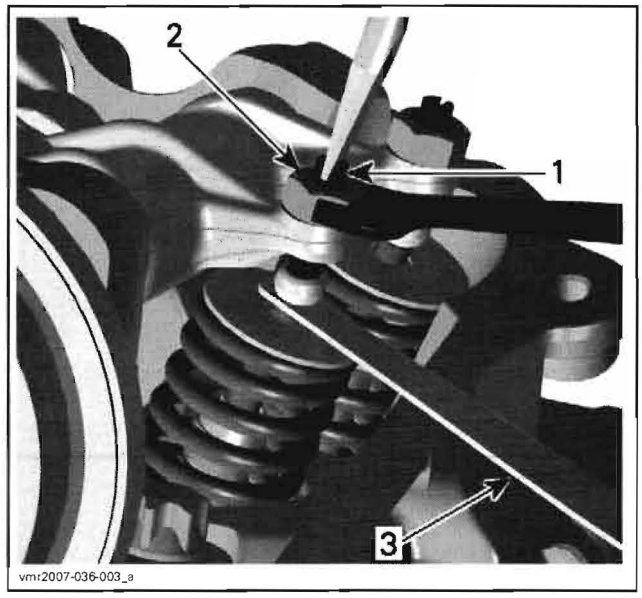

1. *Adjustment screw*
2. *Locking nut*
3. *Feeler gauge*

Repeat the procedure for each valve.

Before installing valve covers, recheck valve clearance.

INSPECTION

LEAK TEST

Before performing the cylinder leak test, verify the following:
- clamp(s) tightness
- radiator and hoses.

NOTE: For best accuracy, the leak test should be done with the engine at normal operating temperature.

⚠ WARNING

Prevent burning yourself on hot engine parts.

Preparation

Disconnect battery.

⚠ WARNING

Always respect this order for disassembly; disconnect BLACK (-) cable first.

Remove radiator cap.

⚠ WARNING

To prevent burning yourself only remove the radiator cap by wearing the appropriate safety equipment.

Remove any parts to have access to engine cylinder heads.

Unplug spark plug cable.

Clean spark plug area and remove spark plug from cylinder head.

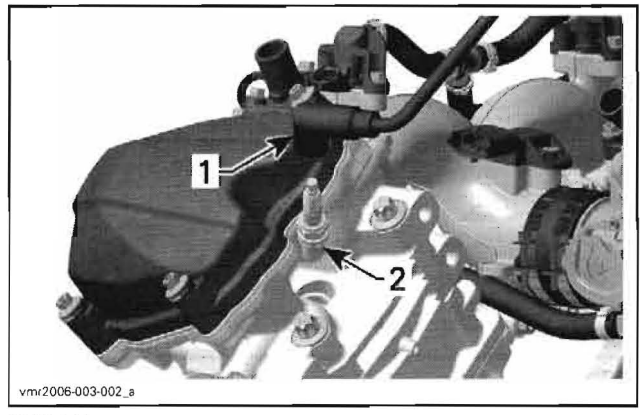

TYPICAL
1. *Spark plug cable*
2. *Spark plug*

Remove valve cover.

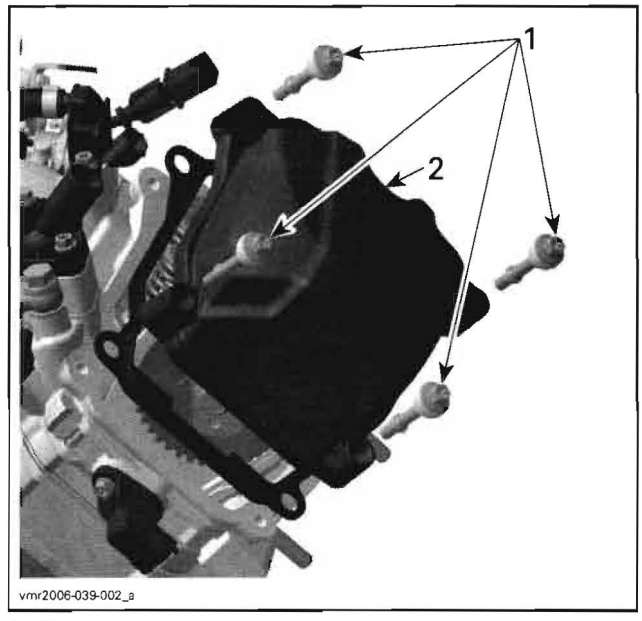

1. *Valve cover screws*
2. *Valve cover*

Rotate crankshaft until piston is at ignition TDC.

To turn crankshaft, there are two possible procedures.

First Procedure

- Turn the drive pulley.

Second Procedure

- Remove plug screw with O-ring from magneto cover.
- Use a 14 mm Allen key and turn crankshaft.

www.midwestmanuals.com
Sales@midwestmanuals.com

www.midwestmanuals.com

CAUTION: Turn only clockwise to avoid loosening of magneto flywheel Allen screw.

Using the dial gauge (P/N 414 104 700), turn the crankshaft and set the piston to precisely ignition TDC.

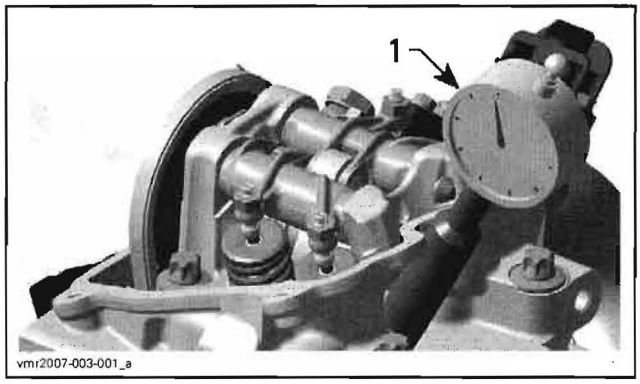

TYPICAL
1. Dial gauge

NOTE: If a dial gauge is not available, use a screwdriver or another similarly suitable tool.

CAUTION: Do not scratch or damage piston/cylinder surface.

NOTE: At ignition TDC the marks on the camshaft timing gear have to be parallel to cylinder head base as per following illustration.

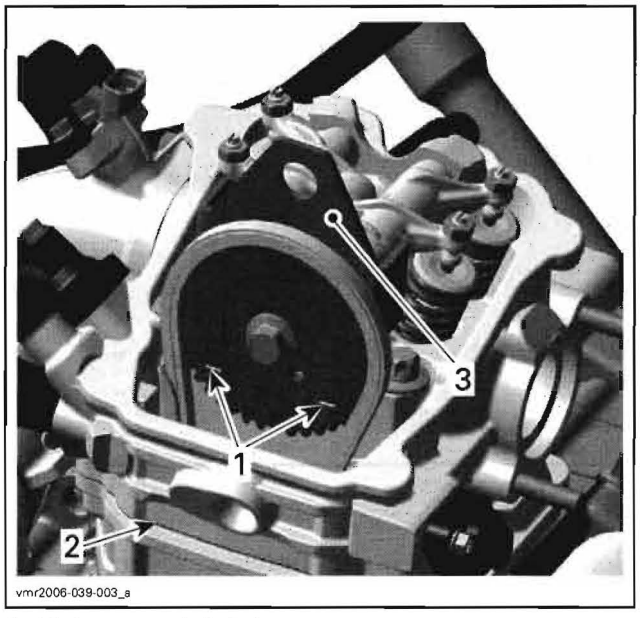

1. Marks on camshaft timing gear
2. Cylinder head base
3. Camshaft locking tool

Lock camshaft at TDC by using camshaft locking tool (P/N 529 035 926).

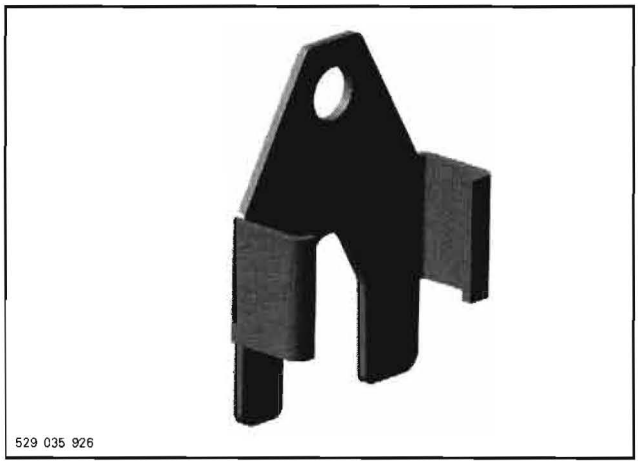

CAMSHAFT LOCKING TOOL

Leak Test

Connect to adequate air supply.

Set needle of measuring gauge to zero.

NOTE: All testers have specific instructions on gauge operation and required pressure.

Install gauge adapter into previously cleaned spark plug hole.

Supply combustion chamber with air pressure.

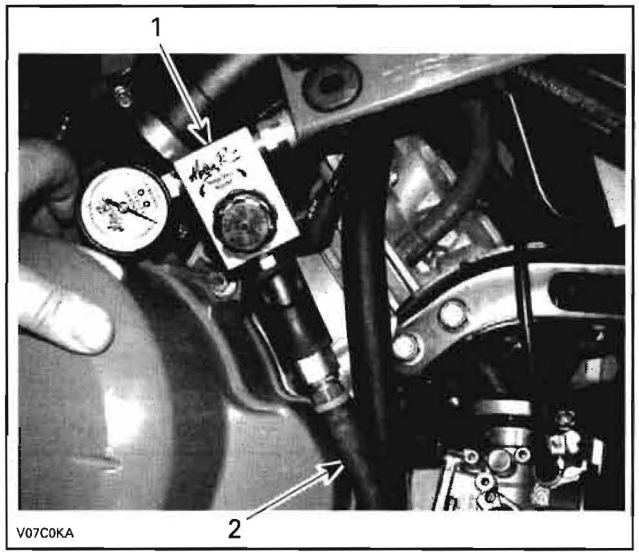

TYPICAL
1. Leak Tester
2. Air supply hose

Note the amount or percentage of leakage (depending on tester).

www.midwestmanuals.com
Sales@midwestmanuals.com

www.midwestmanuals.com

LEAKAGE PERCENTAGE	ENGINE CONDITION
0% to 15%	Excellent condition
16% to 25%	Good condition
26% to 40%	Fair condition; reduced engine performance
41% and higher	Poor condition, diagnose and repair engine

Diagnosis

Listen for air leaks.

- air escaping on intake port/throttle body means leaking intake valve(s)
- air escaping on exhaust port means leaking exhaust valve(s)
- air bubbles out of radiator means leaking cylinder head gasket
- air/oil escaping from crankcase means damaged gasket and/or loosened screws (refer to *BOTTOM END*)
- air/coolant escaping from cylinder/head means damaged gasket(s) and/or loosened screws (refer to *INTAKE MANIFOLD, CYLINDER HEAD AND CYLINDER*)
- air escaping into crankcase area means excessively worn cylinder and/or broken piston rings (refer to *INTAKE MANIFOLD, CYLINDER HEAD AND CYLINDER*).

NOTE: For all the checkpoints mentioned above, see the appropriate engine section to diagnose and repair the engine.

Reassembly

Reverse the preparation procedure. Ensure to respect torque values and use of appropriate products/lubricants. Refer to exploded views in other sections of this manual as required.

PROCEDURES

INTAKE MANIFOLD

Intake Manifold Removal

Disable fuel pump using B.U.D.S. Look in the **Activation** tab.

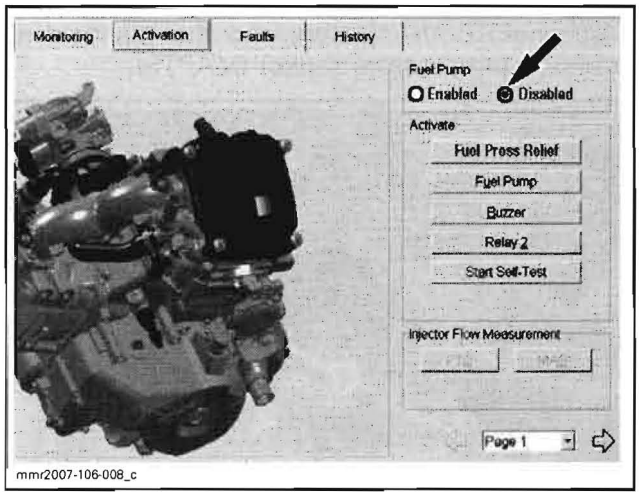

Release fuel pressure by running engine until it runs out of gas.

⚠ WARNING

The fuel hose may be under pressure. Cover the fuel line connection with an absorbent shop rag. Slowly disconnect the fuel hose to release the pressure. Wipe off any fuel spillage.

Remove seat, both side panels, central panel and dash board. Refer to *BODY*.

Remove the cover of the air filter housing.

Remove the air filter.

Unscrew bolts securing the air filter housing to frame.

Unscrew the lower clamp retaining the manifold adapter between throttle body and intake manifold.

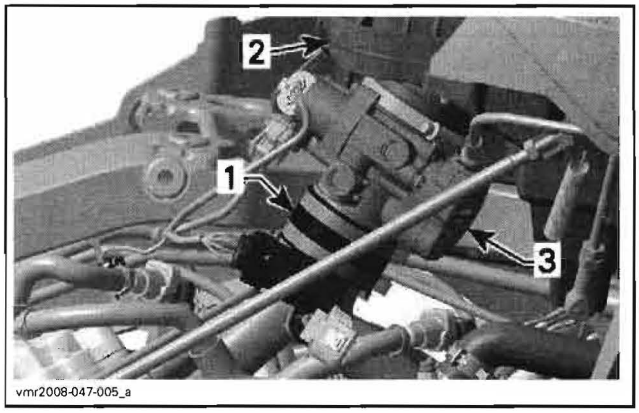

1. *Manifold adapter*
2. *Throttle body*
3. *Air filter housing*

Remove the manifold adapter.

Unplug fuel lines from injectors.

www.midwestmanuals.com
Sales@midwestmanuals.com

www.midwestmanuals.com

Disconnect both injectors and the manifold air pressure temperature sensor (MAPTS).

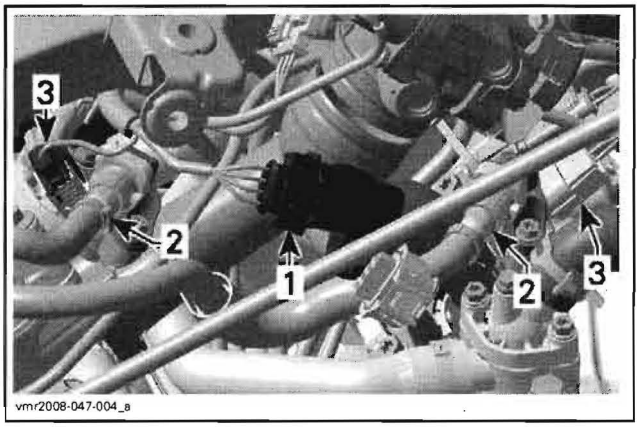

1. *MAPTS*
2. *Fuel lines*
3. *Injectors connectors*

Unscrew intake manifold from cylinders.

Remove intake manifold from vehicle.

NOTE: To remove fuel injectors from intake manifold, refer to *ENGINE MANAGEMENT*.

Intake Manifold Inspection

Check intake manifold for cracks, warping at flanges or any other damage. Replace if necessary.

Intake Manifold Installation

The installation is the reverse of the removal procedure. However, pay attention to the following.

Torque manifold screws to 20 N•m (15 lbf•ft) one cylinder at a time.

Re-enable fuel pump using B.U.D.S.

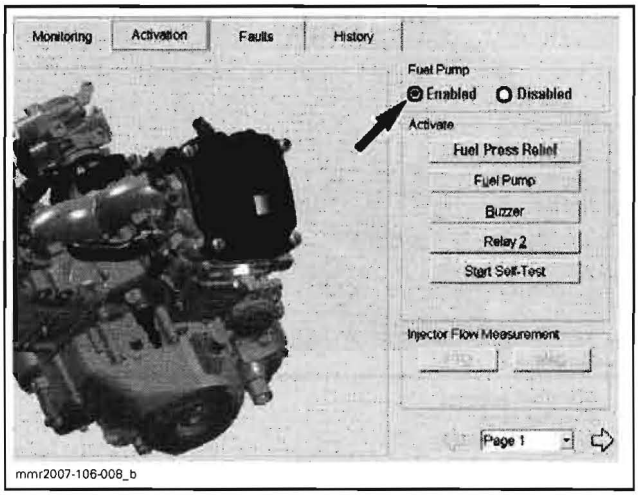

VALVE COVER

Cover Removal

Remove distance screws of valve cover.

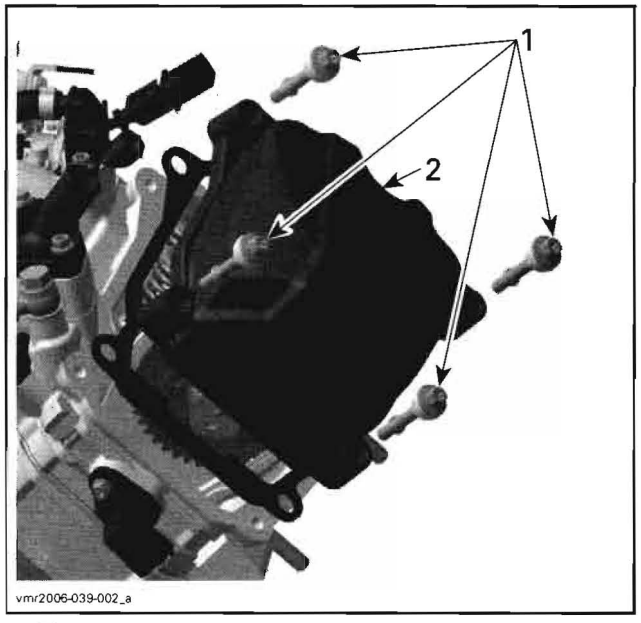

1. *Distance screws*
2. *Valve cover*

Remove valve cover and gasket.

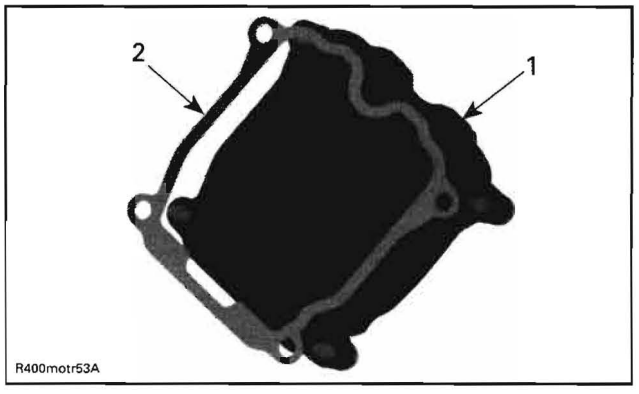

1. *Valve cover*
2. *Gasket*

Repeat the procedure for the other valve cover if required.

Cover Inspection

Check the gasket on the valve cover if it is brittle, cracked or hard. If so, replace the gasket.

Cover Installation

For installation, reverse the removal procedure.

Torque the valve cover distance screws in a criss-cross sequence.

www.midwestmanuals.com
Sales@midwestmanuals.com

www.midwestmanuals.com

TIMING CHAIN TENSIONER

NOTE: Before removal and installation, make sure that the respective cylinder is set to TDC ignition. Refer to *CAMSHAFT*.

Tensioner Removal

⚠ WARNING

Timing chain tensioner is spring loaded. Never perform this operation immediately after the engine has been run because the exhaust system can be very hot. Wait until exhaust system is warm or cold.

Remove chain tensioner plug.

Unscrew chain tensioner plug.

Remove O-ring, spring and chain tensioner plunger.

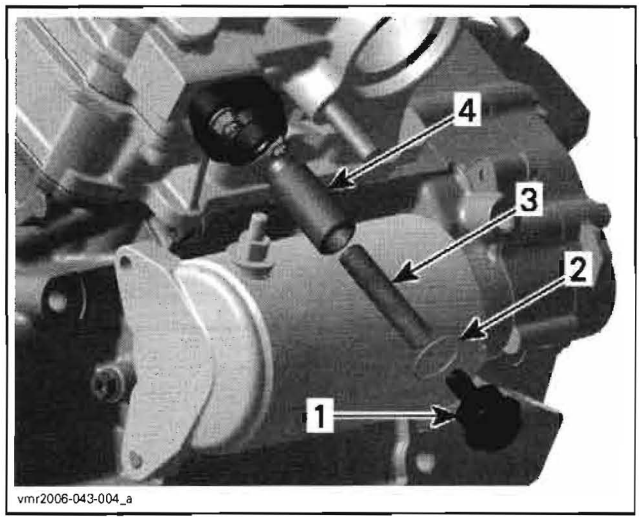

1. *Chain tensioner plug*
2. *O-ring*
3. *Spring*
4. *Chain tensioner plunger*

Unscrew screws retaining chain tensioner housing.

Remove chain tensioner housing with O-ring.

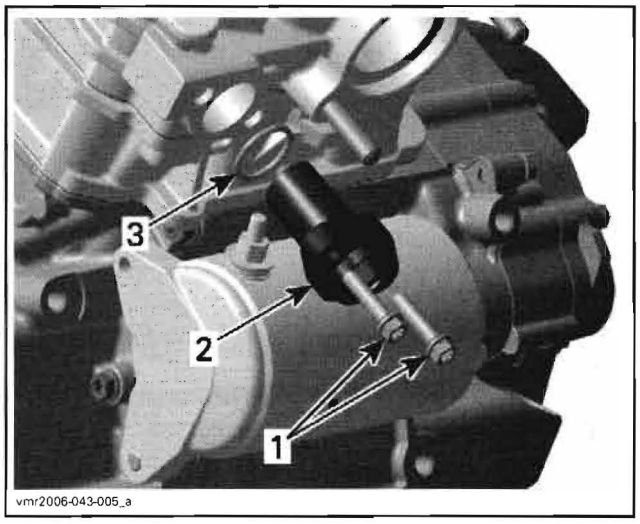

1. *Chain tensioner screws*
2. *Chain tensioner housing*
3. *O-ring*

Tensioner Inspection

Check the housing for cracks or other damages. Replace if necessary.

Check chain tensioner plunger for free movement and/or scoring.

Check if O-rings are brittle, cracked or hard. Replace if necessary.

Check spring condition. Replace if broken or worn.

Tensioner Installation

For installation, reverse the removal procedure. However, pay attention to the following.

NOTE: Before installing the chain tensioner make sure, that the camshaft timing gear can be moved back and forth.

www.midwestmanuals.com
Sales@midwestmanuals.com

www.midwestmanuals.com

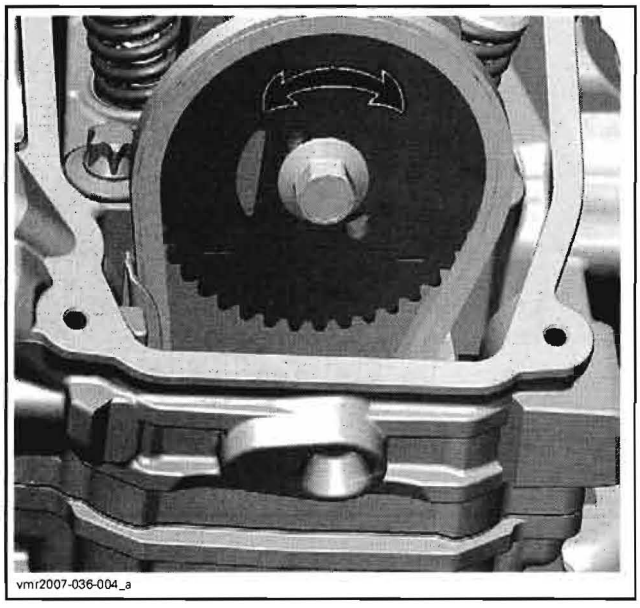

MOVE GEAR BACK AND FORTH

Apply engine oil on the plunger before installing.

NOTE: Slightly screw in the plunger until the timing chain allows no more back and forth movement of the camshaft timing gear. Then screw in the plunger an additional 1/8 turn to reach the required torque of 0.1 N•m (.9 lbf•**in**).

CAUTION: Improper adjustment of the timing chain will lead to severe engine damage.

Fit the spring on one side into the slot of the plug screw and on the other side into the plunger. Turn spring only clockwise in order to fit the spring end into the notch of the plunger and to avoid loosening the plunger during spring installation. Do not preload the spring.

NOTE: Do not forget to place the O-ring on chain tensioner plug.

Then compress the spring and screw in the plug screw.

Finally, tighten the plug screw to 4.5 N•m (40 lbf•**in**).

CAMSHAFT TIMING GEAR

Gear Removal

Remove the valve cover.

Turn crankshaft to TDC ignition of the respective cylinder, see *CAMSHAFT*.

Unscrew timing chain tensioner.

Remove camshaft timing gear screw.

To prevent timing chain stretching during removal of camshaft timing gear screw, use the camshaft locking tool (P/N 529 035 926).

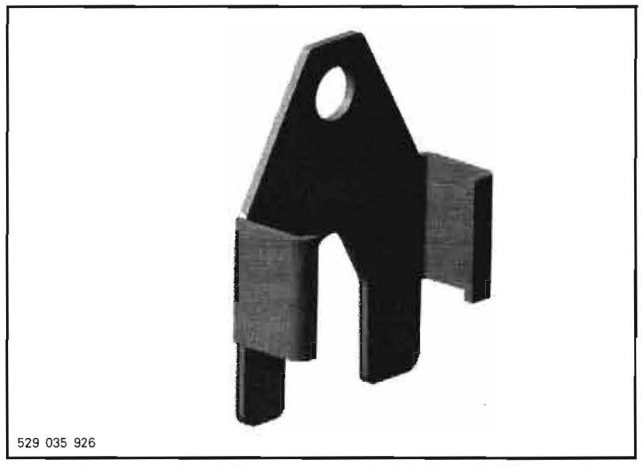

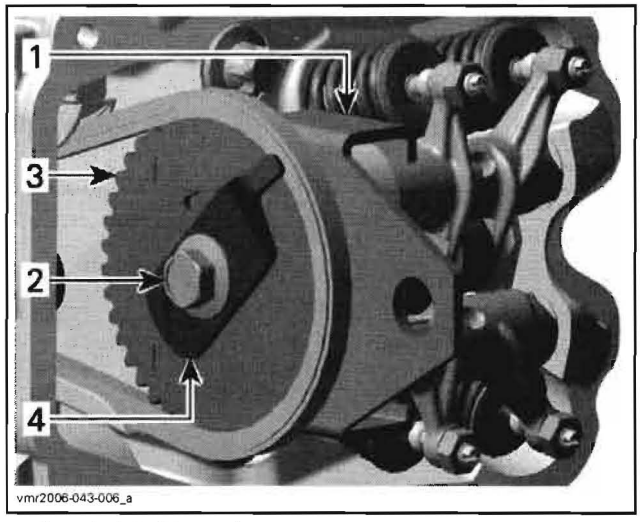

1. *Camshaft locking tool*
2. *Camshaft timing gear screw*
3. *Camshaft timing gear*
4. *Trigger wheel (cylinder head 1 only)*

Remove the camshaft timing gear.

NOTE: Secure timing chain with a retaining wire.

Gear Inspection

Check camshaft timing gear for wear or deterioration.

If gear is worn or damaged, replace it as a set (camshaft timing gear and timing chain).

For crankshaft gear, refer to *BOTTOM END* section, see *CRANKSHAFT*.

Gear Installation

For installation, reverse the removal procedure. Pay attention to the following details.

Clean mating surface and threads of camshaft prior to assemble camshaft timing gear.

www.midwestmanuals.com
Sales@midwestmanuals.com

www.midwestmanuals.com

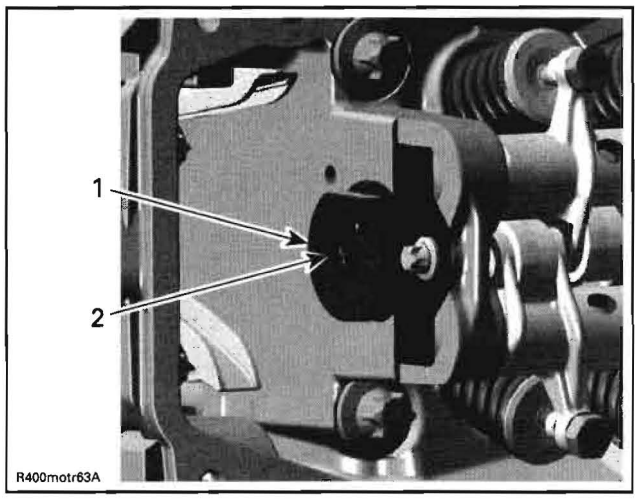

1. Mating surface on camshaft
2. Threads for camshaft screw

Camshaft timing gear and crankshaft must be at TDC ignition position before installing the timing chain.

CAUTION: Crankshaft and camshaft must be locked on TDC ignition position to place camshaft timing gear and timing chain in the proper position.

Install camshaft timing gear so that the timing gear tabs are located into the flat zone of the camshaft.

The printed marks on the camshaft timing gear must be parallel to the cylinder head base. See the following illustration for a proper positioning.

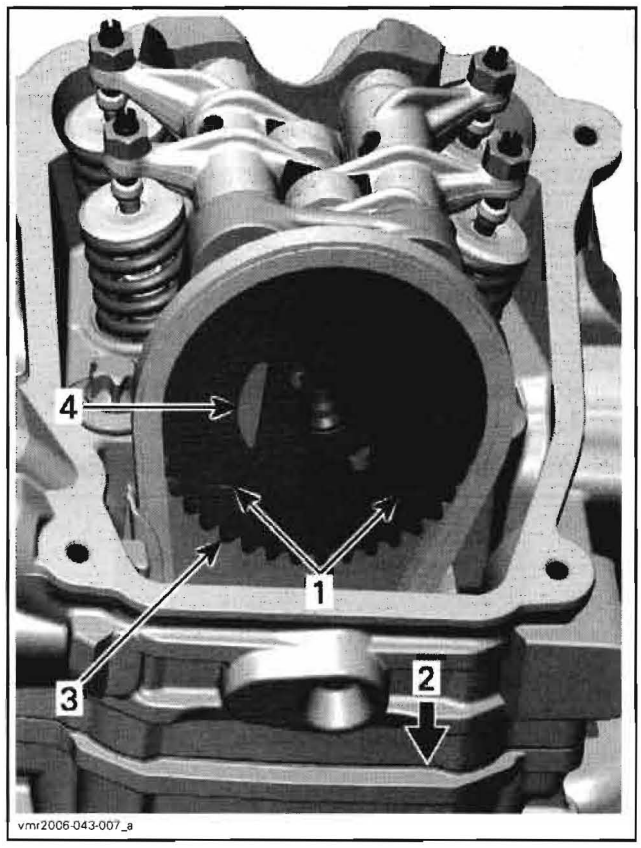

1. Printed marks on camshaft timing gear
2. Cylinder head base
3. Camshaft timing gear
4. Timing gear tab

Install trigger wheel on camshaft timing gear of cylinder 1.

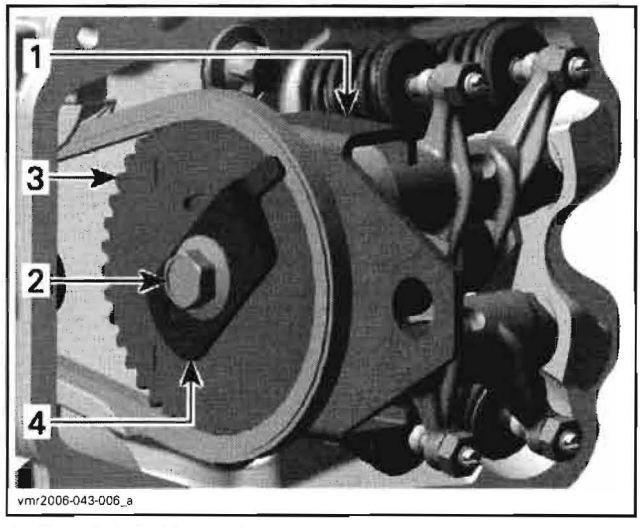

1. Camshaft locking tool
2. Camshaft screw
3. Camshaft timing gear
4. Trigger wheel (cylinder head 1 only)

When the camshaft timing gear and the timing chain are installed, remove the crankshaft locking bolt as well as the camshaft locking tool.

www.midwestmanuals.com
Sales@midwestmanuals.com

www.midwestmanuals.com

NOTE: Before installing the camshaft screw adjust the chain tension (see *CHAIN TENSIONER* below) and check again if marks on the timing gear are parallel to cylinder head base.

Reinstall all other removed parts.

ROCKER ARM

Rocker Arm Removal

Remove valve cover.

Remove chain tensioner and camshaft timing gear no. 1.

Remove Allen screw and camshaft retaining plate.

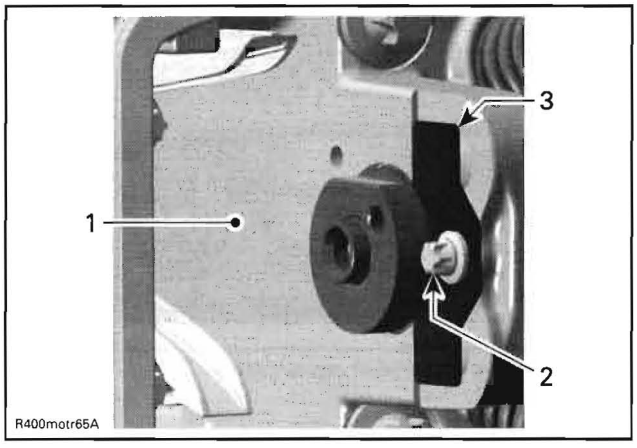

1. *Cylinder head*
2. *Allen screw*
3. *Camshaft retaining plate*

Remove rocker arm shafts.

Remove rocker arm assembly (exhaust side and intake side) with adjustment screws and nuts.

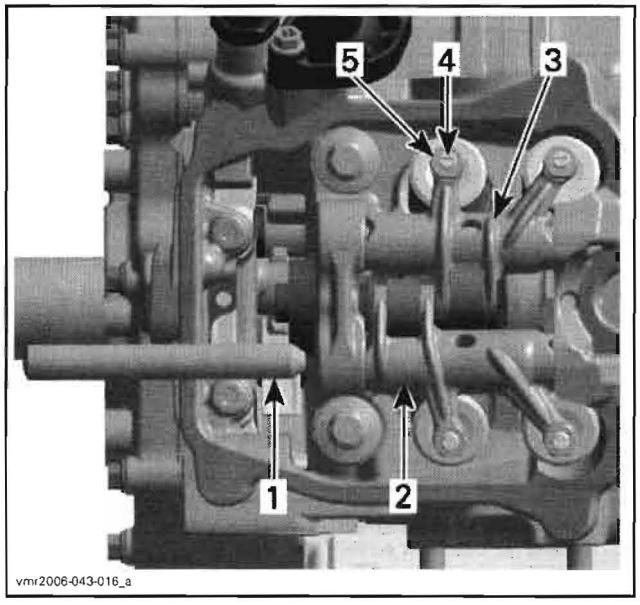

1. *Rocker arm shaft*
2. *Rocker arm (exhaust side)*
3. *Rocker arm (intake side)*
4. *Adjustment screw*
5. *Locking nut*

Remove thrust washers no. 2.

CAUTION: Pay attention not to lose thrust washers or drop them into the timing chain compartment.

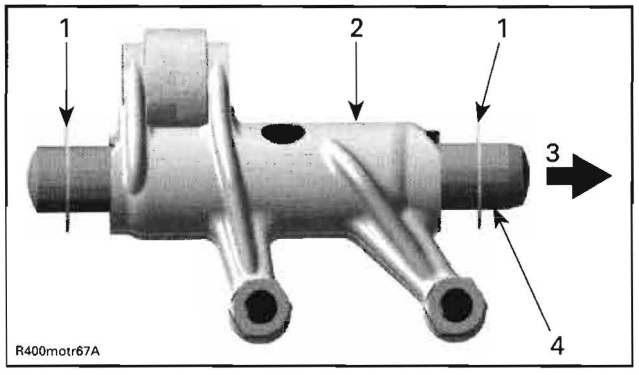

1. *2 thrust washers*
2. *Rocker arm (exhaust side)*
3. *Cylinder head — spark plug side*
4. *Big taper to spark plug side*

Rocker Arm Inspection

Inspect each rocker arm for cracks and scored friction surfaces. If so, replace rocker arm assembly.

Check the rocker arm rollers for free movement, wear and excessive radial play. Replace rocker arm assembly if necessary.

www.midwestmanuals.com
Sales@midwestmanuals.com

www.midwestmanuals.com

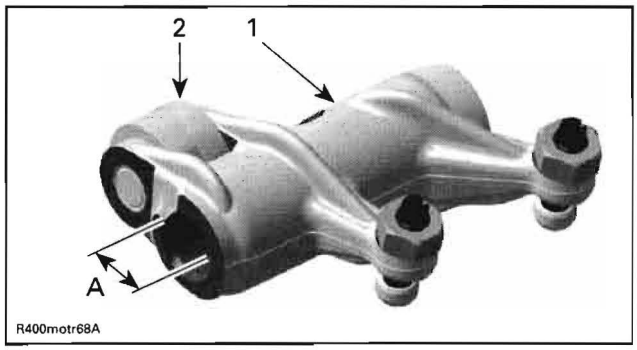

1. Rocker arm (exhaust side)
2. Roller
A. Bore for rocker arm shaft

Measure rocker arm bore diameter. If diameter is out of specification, change the rocker arm assembly.

ROCKER ARM BORE DIAMETER	
NEW	12.036 to 12.050 mm (.4739 to .4744 in)
SERVICE LIMIT	12.060 mm (.4748 in)

Check adjustment screws for free movement, cracks and/or excessive play.

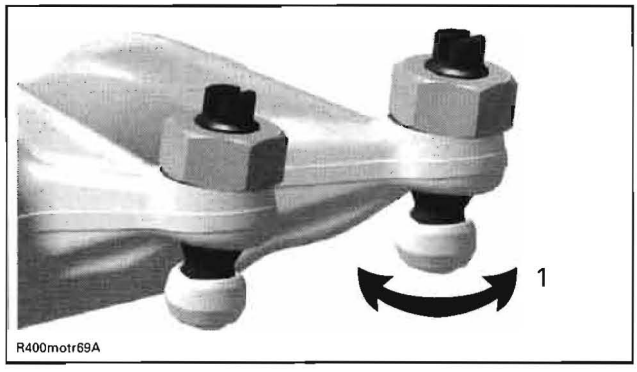

1. Free movement of adjustment screw top

Rocker Arm Shaft

Check for scored friction surfaces; if so, replace parts.

Measure rocker arm shaft diameter.

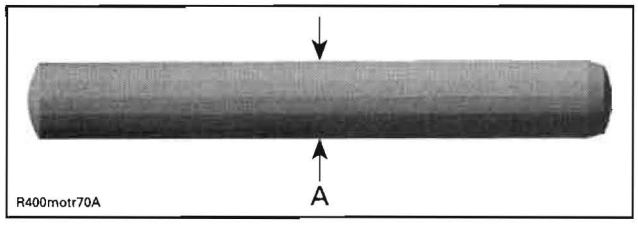

A. Measure rocker arm shaft diameter here

ROCKER ARM SHAFT DIAMETER	
NEW	12.000 to 12.018 mm (.4724 to .4731 in)
SERVICE LIMIT	11.990 mm (.4720 in)

Any area worn excessively will require parts replacement.

Rocker Arm Installation

NOTE: Use the same procedure for exhaust and intake rocker arm.

Apply engine oil on rocker arm shaft.

Install the rocker arm shafts with the chamfered edge first and use following procedure.

Insert a rocker arm pin through rocker arm pin bore.

Install a thrust washer **no. 2** then the proper rocker arm **no. 3** (exhaust side) or **no. 4** (intake side).

Push in rocker arm shaft until its chamfer reaches the end of rocker arm bore.

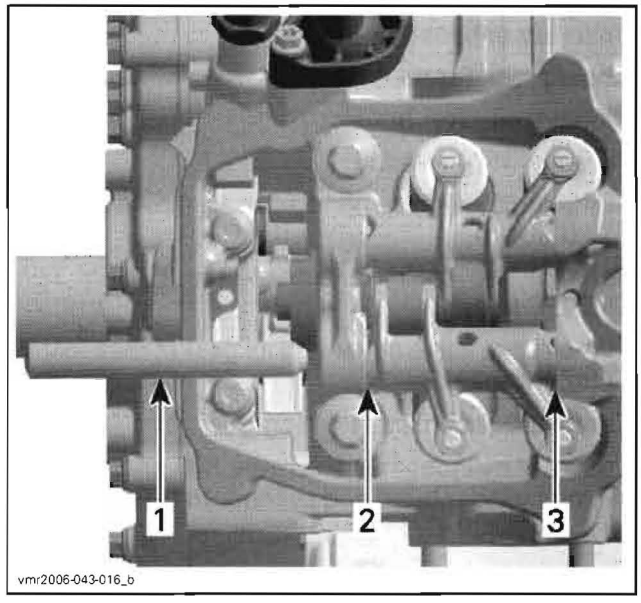

1. Rocker arm shaft
2. Thrust washer (timing chain side)
3. Thrust washer (spark plug side)

Place the other thrust washer and push rocker arm shaft to end position.

Install the camshaft retaining plate **no. 5**.

TIMING CHAIN

Refer to *BOTTOM END*, see *TIMING CHAIN*.

www.midwestmanuals.com
Sales@midwestmanuals.com

www.midwestmanuals.com

CYLINDER HEAD

Cylinder Head Removal

The removal procedure is the same for both cylinder heads.

Drain coolant (refer to *COOLING SYSTEM*).

NOTE: Before removing cylinder head, blow out remaining coolant by air pressure. During cylinder head removal, the remaining coolant in cylinder head could overflow into the engine and a little quantity of coolant could drop into the engine. In this case, the engine oil will be contaminated.

Disconnect spark plug wire.

Disconnect temperature sensor connector, located at rear cylinder head.

Disconnect camshaft sensor, located at front cylinder head.

Remove both side panels and both inner fenders (refer to *BODY*).

Remove exhaust pipe springs or exhaust pipe clamp.

Unscrew exhaust pipe nuts.

Unplug radiator inlet hose.

Remove air filter housing.

Remove throttle body.

Remove the intake manifold (see *INTAKE MANIFOLD* above.

Remove the chain tensioner (see *CHAIN TENSIONER* above).

Remove the valve cover and its gasket (see *VALVE COVER* above).

Remove the camshaft timing gear.

Unscrew cylinder head screws M6 and M10 retaining cylinder head and cylinder to cylinder base.

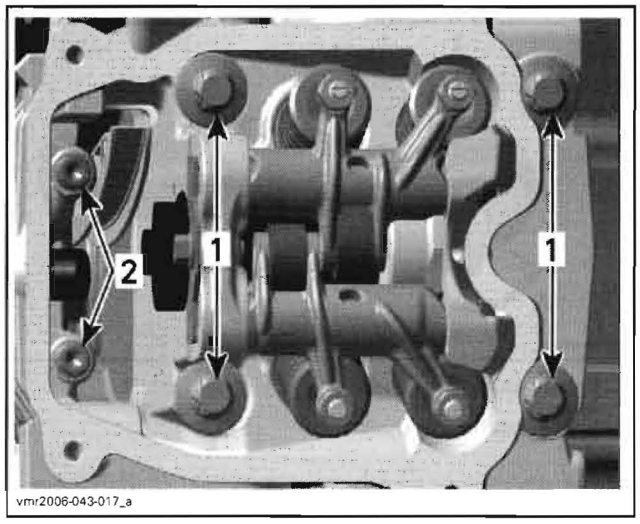

1. *Cylinder head screws M10*
2. *Cylinder head screws M6*

Pull up cylinder head.

Remove chain guide.

Remove the cylinder head gasket and scrap it.

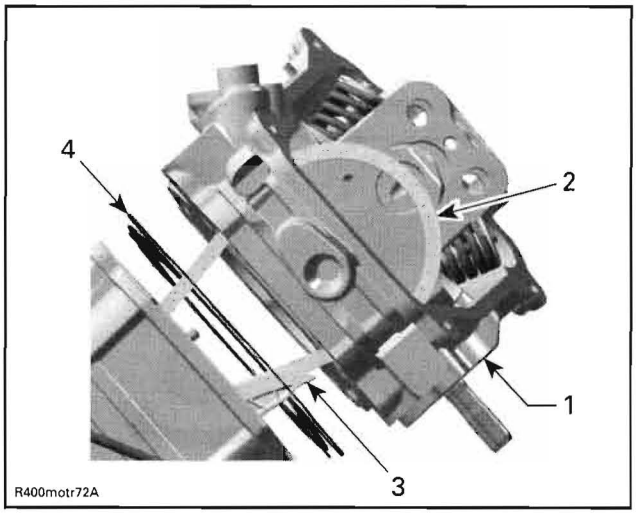

1. *Cylinder head*
2. *Timing chain*
3. *Chain guide*
4. *Cylinder head gasket*

Cylinder Head Inspection

Inspect timing chain guide for wear, cracks or other damages. Replace if necessary.

Check for cracks between valve seats, if so, replace cylinder head.

Check mating surface between cylinder and cylinder head for contamination. If so, clean both surfaces.

Clean oil support through the cylinder head from contamination.

www.midwestmanuals.com
Sales@midwestmanuals.com

www.midwestmanuals.com

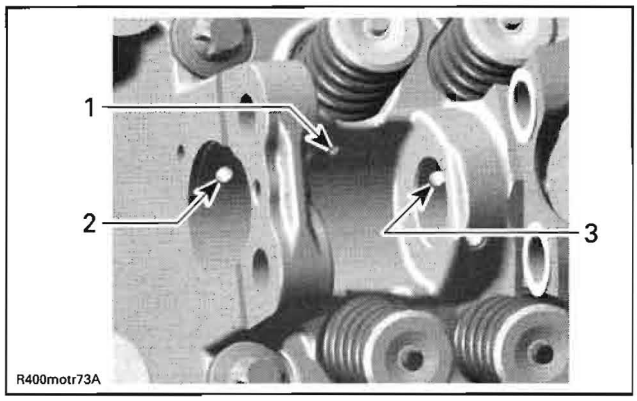

1. *Oil port to lubricate camshaft lobes intake/exhaust*
2. *Oil supply to camshaft bearing journal timing chain side*
3. *Oil supply to camshaft bearing journal spark plug side*

Cylinder Head Installation

NOTE: The cylinder heads are not identical in design. Do not invert the cylinder heads at assembly.

For installation, reverse the removal procedure. Pay attention to the following details.

Ensure dowel pins **no. 9** are in place.

CAUTION: Chain guide has to be fixed between cylinder and cylinder head.

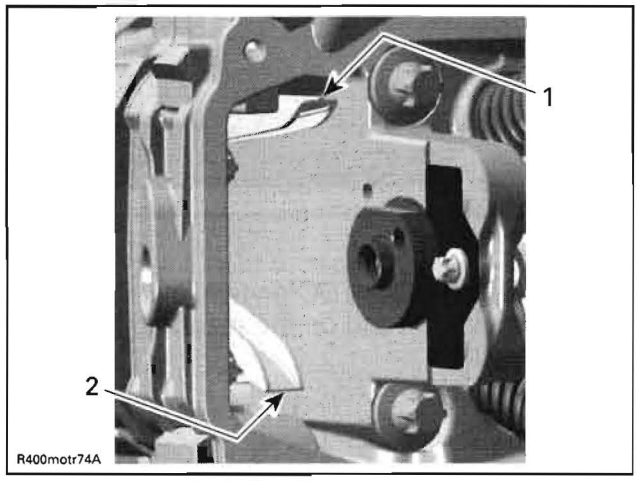

1. *Chain guide (fixed between cylinder and cylinder head)*
2. *Chain tensioner guide (mounted in crankcase)*

Install a **NEW** cylinder head gasket.

First, torque cylinder head screws M10 in criss-cross sequence to 20 N•m (15 lbf•ft) then finish by tightening to 60 N•m (44 lbf•ft).

Install cylinder head screws M6.

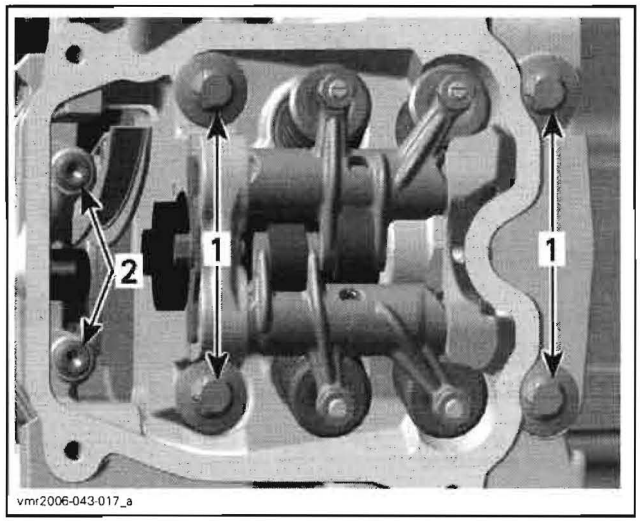

1. *Cylinder head screws M10*
2. *Cylinder head screws M6*

Check chain guide for movement.

Remove crankshaft locking bolt and reinstall plug screw with sealing ring.

CAMSHAFT

NOTE: The engine is equipped with two different camshafts.

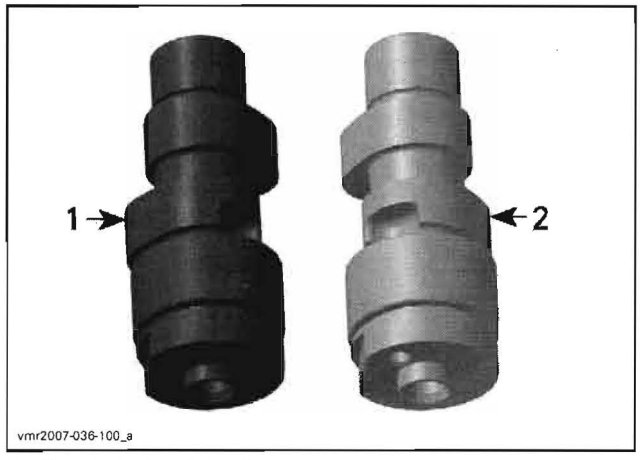

1. *Camshaft of cylinder 1*
2. *Camshaft of cylinder 2*

Camshaft Timing

NOTE: If a piston (of cylinder 1 or 2) is set to TDC ignition, the camshaft timing gear of the opposite cylinder must be in the following position.

www.midwestmanuals.com
Sales@midwestmanuals.com

www.midwestmanuals.com

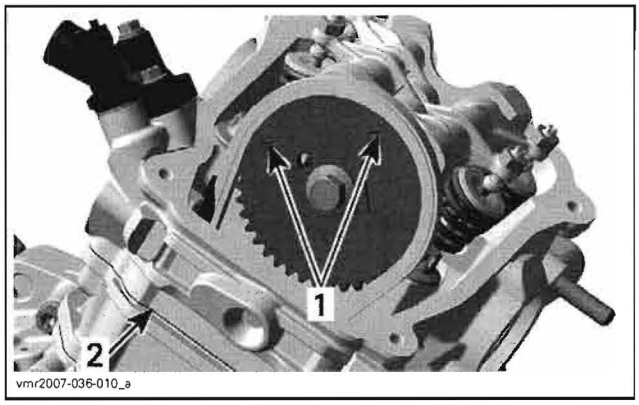

TYPICAL
1. *Marks on timing gear of the opposite cylinder*
2. *Cylinder head base*

Camshaft Timing Cylinder 2

Turn crankshaft until piston is at TDC ignition as follows.

Remove spark plug of both cylinders.

Remove valve covers of both cylinders.

Remove the plug screw and O-ring of magneto cover.

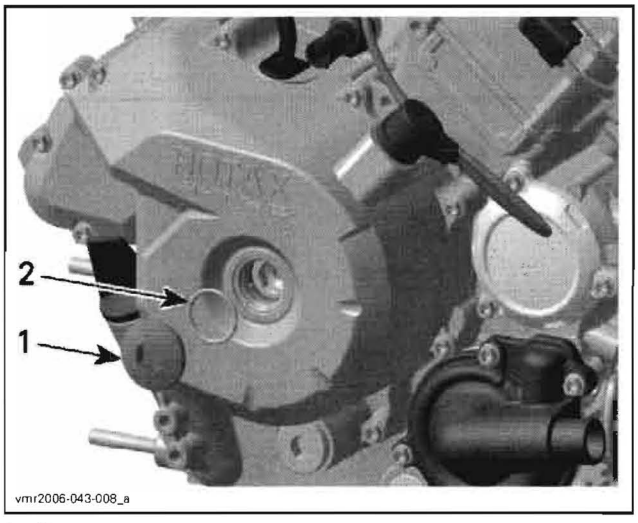

1. *Plug screw*
2. *O-ring*

Remove the crankshaft position sensor (CPS).

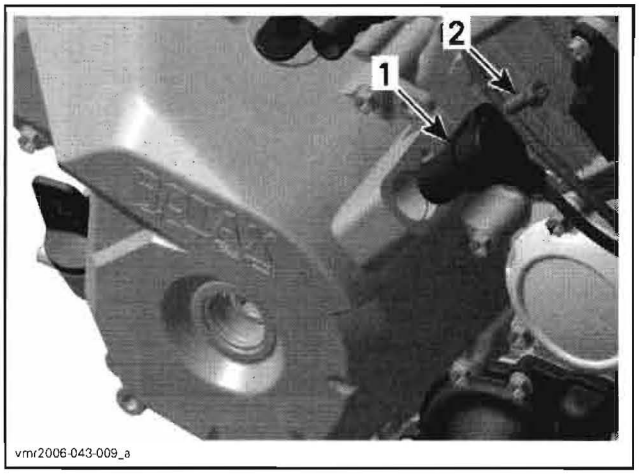

1. *Crankshaft position sensor*
2. *Screw*

Use a 14 mm Allen key to turn crankshaft until piston 2, rear is at TDC ignition.

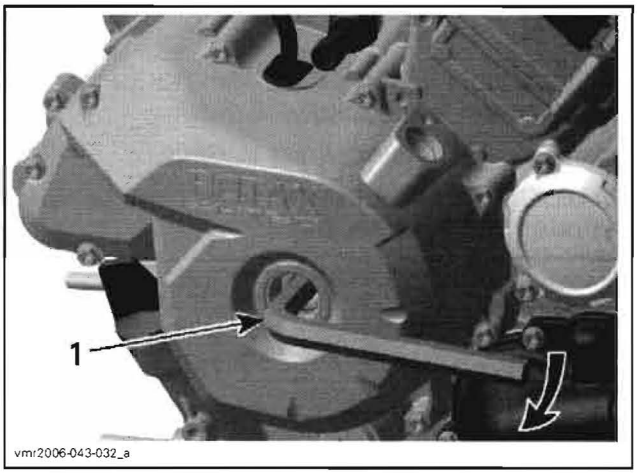

1. *Allen key 14 mm*

When rear piston is at TDC ignition, marks on magneto flywheel "2" and on the magneto cover are aligned.

www.midwestmanuals.com
Sales@midwestmanuals.com

www.midwestmanuals.com

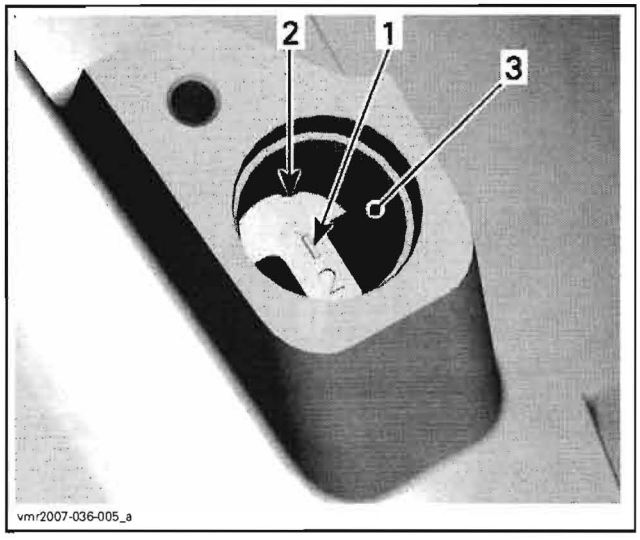

1. *Mark "2" on magneto flywheel*
2. *Notch on magneto cover*
3. *Crankshaft position sensor location*

At TDC ignition, the printed marks on the camshaft timing gear have to be parallel to cylinder head base.

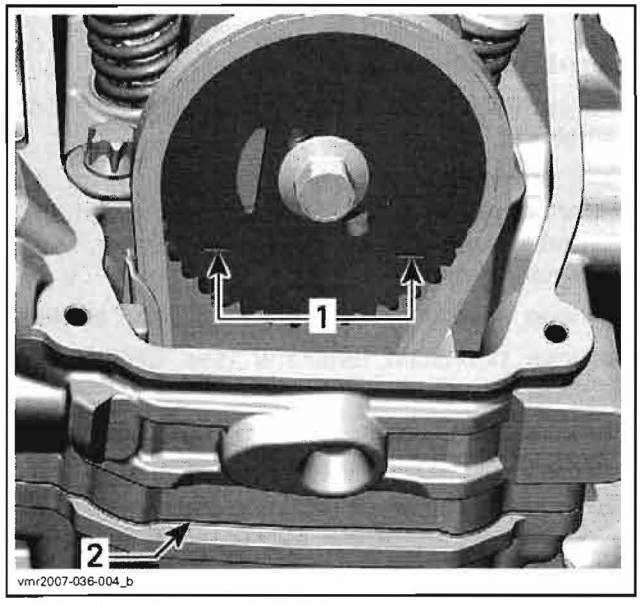

1. *Printed marks on camshaft timing gear*
2. *Cylinder head base*

To lock crankshaft at TDC ignition, proceed as follows.

Remove from crankcase plug screw with sealing ring.

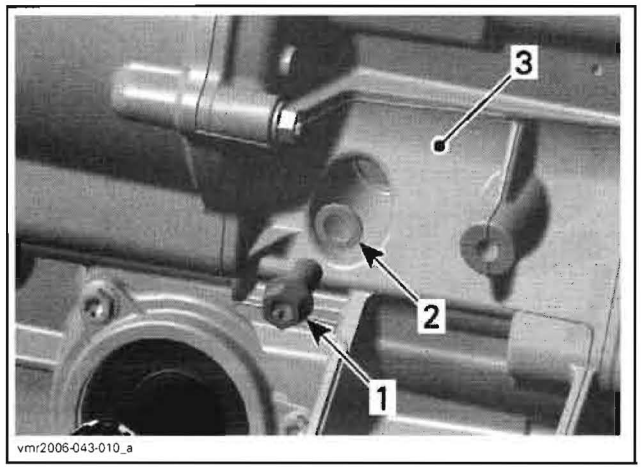

1. *Plug screw*
2. *Sealing ring*
3. *Crankcase PTO side, front side*

Lock crankshaft with the crankshaft locking bolt (P/N 529 035 617).

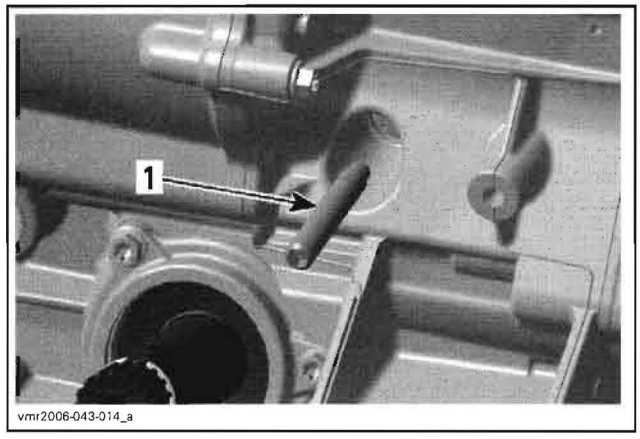

1. *Crankshaft locking bolt*

NOTE: Make sure the locking bolt engages in the groove of the crankshaft.

Camshaft Timing Cylinder 1

Turn cylinder 2 to TDC ignition, see *CAMSHAFT TIMING CYLINDER 2*.

NOTE: Do not lock crankshaft.

Using a 14 mm Allen key, turn crankshaft 280° counterclockwise, until marks on magneto flywheel "1" and magneto cover are aligned.

www.midwestmanuals.com
Sales@midwestmanuals.com

www.midwestmanuals.com

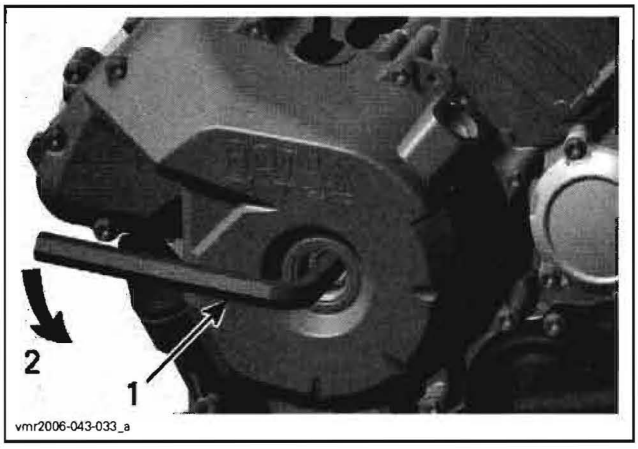

1. Allen key 14 mm
2. Turn crankshaft 280° counterclockwise

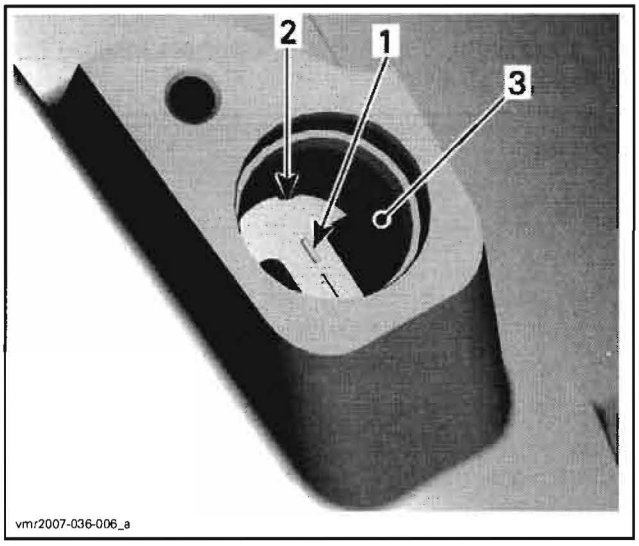

1. Mark "1" on magneto flywheel
2. Notch on magneto cover
3. Location of crankshaft position sensor

NOTE: At TDC ignition, the printed marks on the camshaft timing gear have to be parallel to cylinder head base as per following illustration.

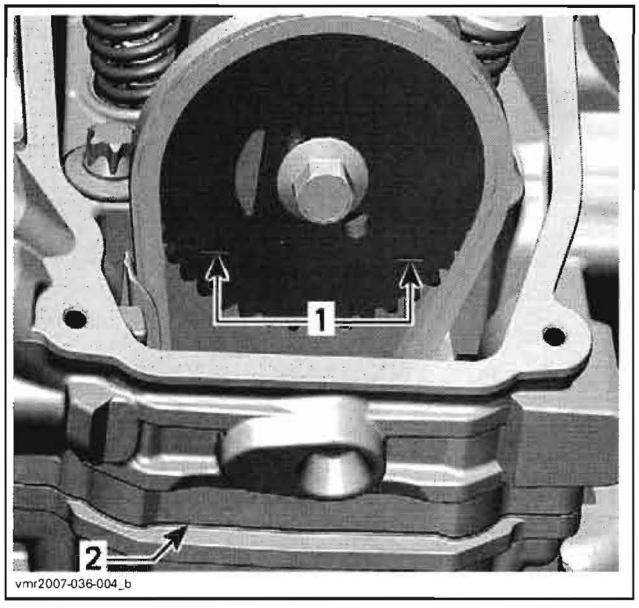

TYPICAL
1. Printed marks on camshaft timing gear
2. Cylinder head base

CAUTION: Crankshaft can not be locked at cylinder 1 TDC ignition.

Camshaft Removal

The removal procedure is the same for both camshafts.

Each camshaft is different in design. Thus, it is important not to mix up any parts of the camshaft assembly with that of the other cylinder. Keep parts as a group.

Remove valve cover (see *VALVE COVER* above).

Remove the chain tensioner (see *CHAIN TENSIONER* above).

Remove the camshaft timing gear (see *CAMSHAFT TIMING GEAR* above).

Remove the camshaft retaining plate.

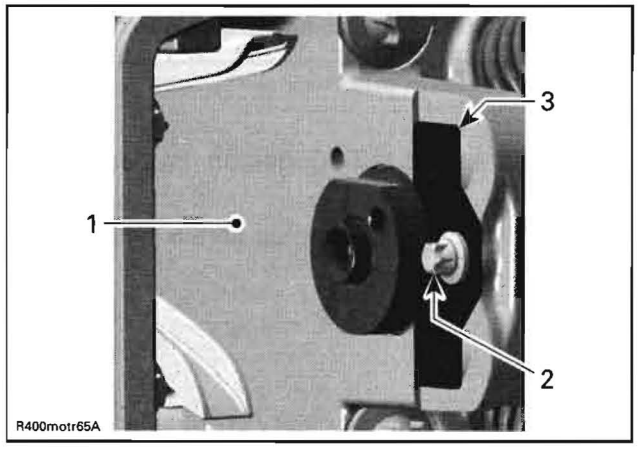

1. Cylinder head
2. Allen screw
3. Camshaft retaining plate

www.midwestmanuals.com
Sales@midwestmanuals.com

www.midwestmanuals.com

Remove rocker arms (see *ROCKER ARM* above).

Remove the camshaft.

NOTE: For removal rotate camshaft so that intake/exhaust lobe shows to upper side of cylinder head.

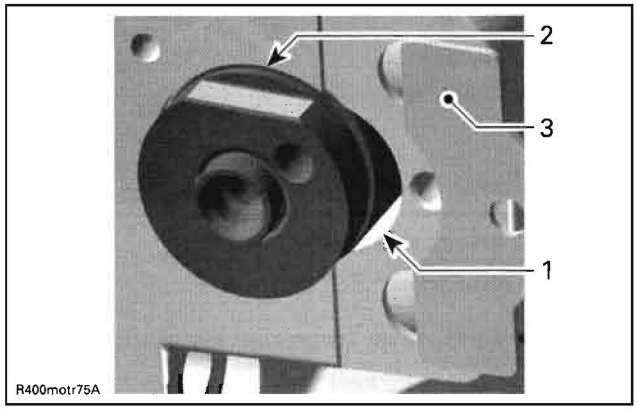

1. Area for camshaft lobes
2. Camshaft
3. Camshaft retaining plate

Camshaft Inspection

Check each lobe and bearing journal of camshaft for scoring, scuffing, cracks or other signs of wear.

Measure camshaft journal diameter and lobe height using a micrometer.

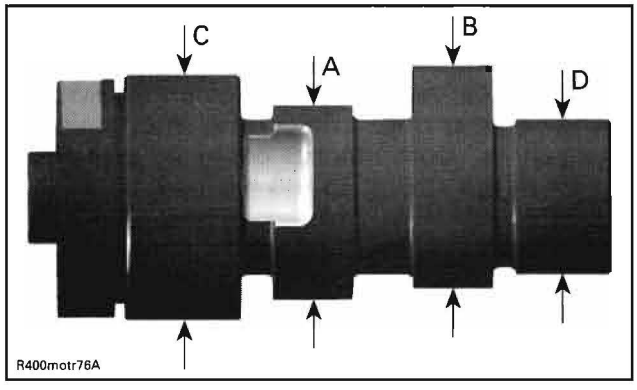

A. Camshaft lobe (exhaust valves)
B. Camshaft lobe (intake valves)
C. Camshaft journal (timing chain side)
D. Camshaft journal (spark plug side)

V490	
CAMSHAFT LOBE (exhaust)	
NEW	31.730 to 31.930 mm (1.2492 to 1.2571 in)
SERVICE LIMIT	31.710 mm (1.2484 in)
CAMSHAFT LOBE (intake)	
NEW	31.830 to 32.030 mm (1.2531 to 1.2610 in)
SERVICE LIMIT	31.810 mm (1.2524 in)

V660/V810	
CAMSHAFT LOBE (exhaust)	
NEW	31.940 to 32.140 mm (1.2575 to 1.2654 in)
SERVICE LIMIT	31.920 mm (1.2567 in)
CAMSHAFT LOBE (intake)	
NEW	32.110 to 32.310 mm (1.2642 to 1.2721 in)
SERVICE LIMIT	32.090 mm (1.2634 in)

ALL ENGINES	
CAMSHAFT JOURNAL (timing chain side)	
NEW	34.959 to 34.975 mm (1.3763 to 1.3770 in)
SERVICE LIMIT	34.950 mm (1.3760 in)
CAMSHAFT JOURNAL (spark plug side)	
NEW	21.959 to 21.980 mm (.8645 to .8654 in)
SERVICE LIMIT	21.950 mm (.8642 in)

Measure clearance between both ends of camshaft and cylinder head.

www.midwestmanuals.com
Sales@midwestmanuals.com

www.midwestmanuals.com

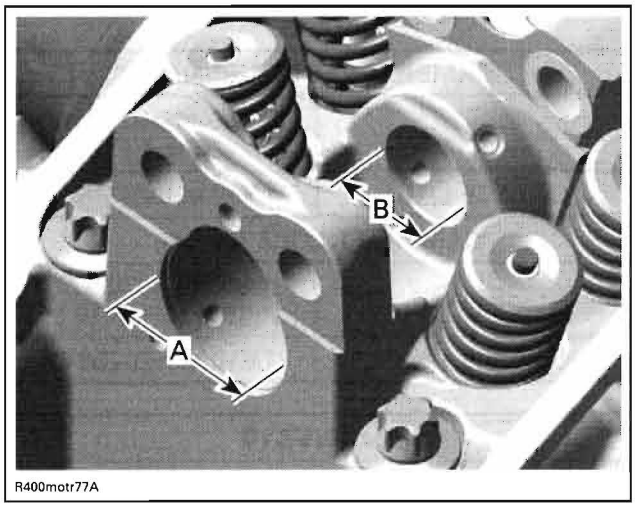

A. Camshaft bearing (timing chain side)
B. Camshaft bearing (spark plug side)

ALL ENGINES	
CAMSHAFT BEARING (timing chain side)	
NEW	35.000 to 35.025 mm (1.3780 to 1.3789 in)
SERVICE LIMIT	35.040 mm (1.3795 in)
CAMSHAFT BEARING (spark plug side)	
NEW	22.000 to 22.021 mm (.8661 to .8670 in)
SERVICE LIMIT	22.040 mm (.8677 in)

Replace parts that are not within specifications.

Camshaft Installation

For installation, reverse the removal procedure. Pay attention to the following details.

CAUTION: The camshafts are not identical in design. Do not invert the camshafts during assembly. Any mix-up of the components will lead to engine damage.

Place the camshaft retaining plate in the slot of the camshaft.

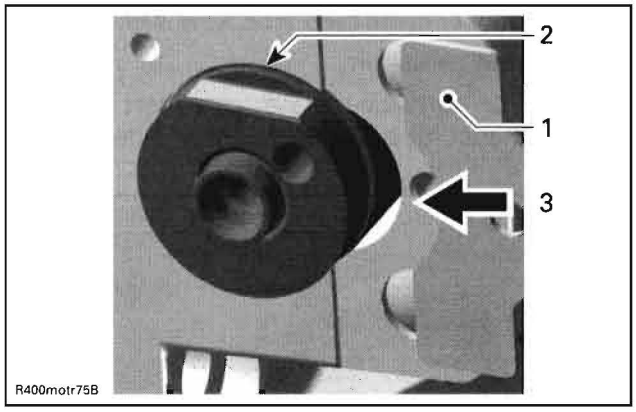

1. Camshaft retaining plate position
2. Slot retaining camshaft
3. Direction of movement

For other parts, refer to proper installation procedure.

VALVE SPRING

Valve Spring Removal

Remove rocker arms (see *ROCKER ARM* above).

Remove cylinder head (see *CYLINDER HEAD* above).

Compress valve spring **no. 6**; use valve spring compressor clamp (P/N 529 035 724) and valve spring compressor cup (P/N 529 035 764).

⚠ WARNING

Always wear safety glasses when disassembling valve springs. Be careful when unlocking valves. Components could fly away because of the strong spring preload.

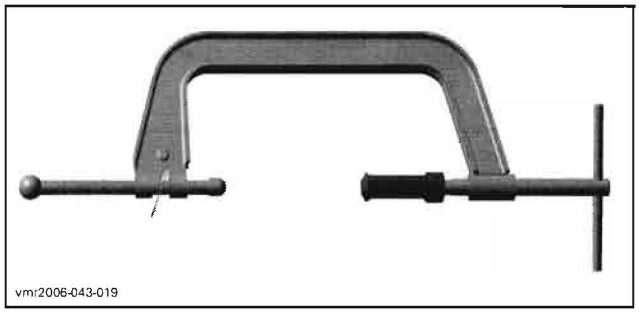

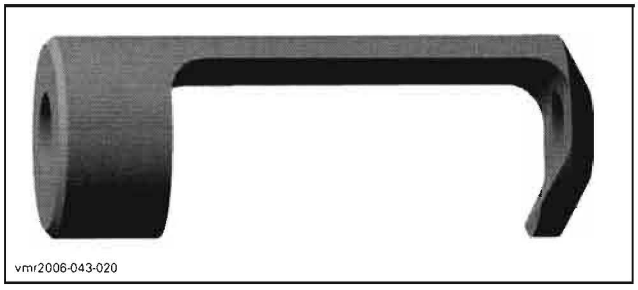

www.midwestmanuals.com
Sales@midwestmanuals.com

www.midwestmanuals.com

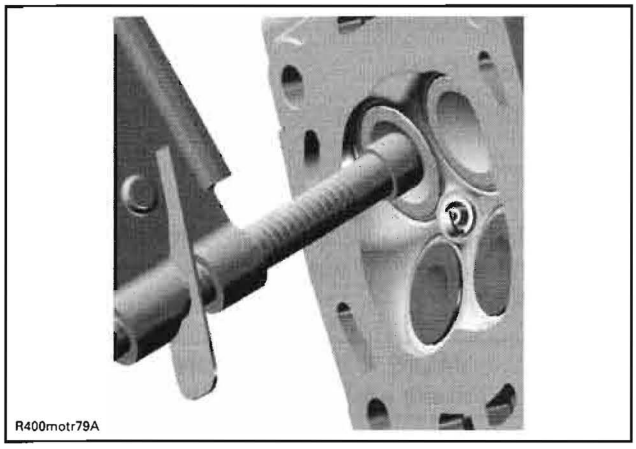

LOCATE VALVE SPRING COMPRESSOR CLAMP IN CENTER OF THE VALVE

Remove valve cotters.

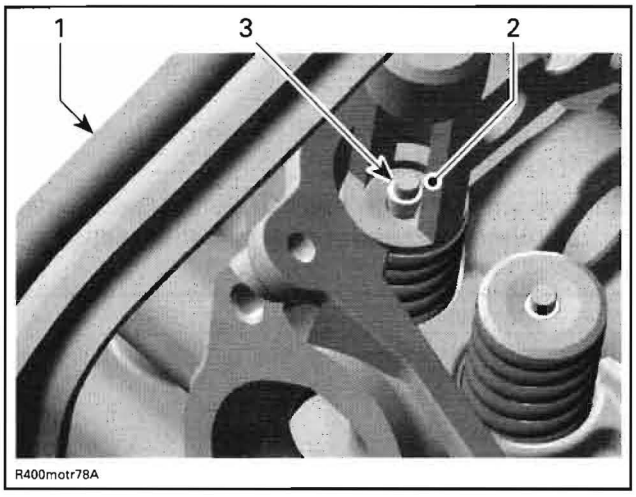

1. *Valve spring compressor clamp*
2. *Valve spring compressor cup*
3. *Valve cotter*

Withdraw valve spring compressor, valve spring retainer **no. 7** and valve spring **no. 6**.

Valve Spring Inspection

Check valve spring for visible damages. If so, replace valve spring.

Check valve spring for free length and straightness.

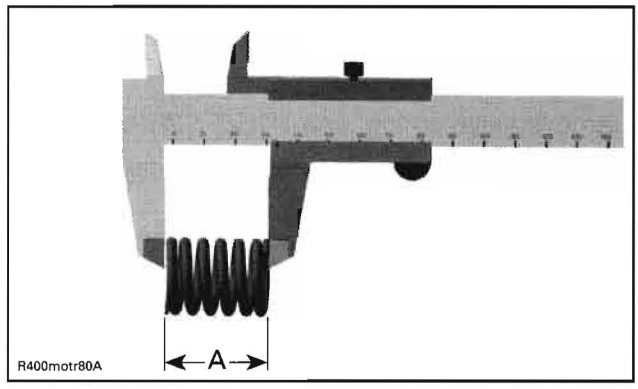

A. Valve spring length

VALVE SPRING FREE LENGTH	
NOMINAL NEW	40.81 mm (1.607 in)
SERVICE LIMIT	39.00 mm (1.535 in)

Replace valves springs if not within specifications.

Valve Spring Installation

For installation, reverse the removal procedure. Pay attention to the following details.

Colored area of the valve spring must be placed on top.

To ease installation of cotters, apply oil or grease on them so that they remain in place while releasing the spring.

NOTE: Valve cotter must be properly engaged in valve stem grooves.

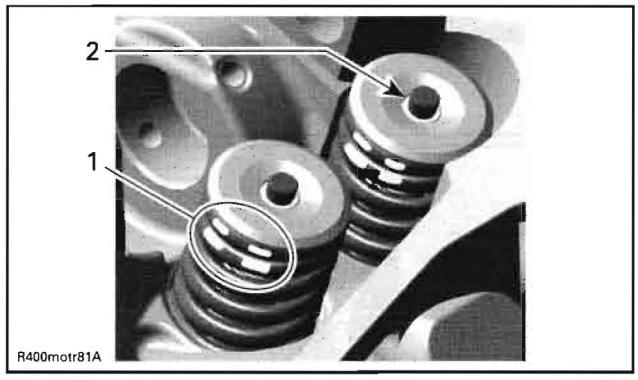

1. *Position of the valve spring*
2. *Valve cotter*

After spring is installed, ensure it is properly locked by tapping on valve stem end with a soft hammer so that valve opens and closes a few times.

CAUTION: An improperly locked valve spring will cause engine damage.

www.midwestmanuals.com
Sales@midwestmanuals.com

www.midwestmanuals.com

VALVE

Valve Removal

Remove valve spring, see *VALVE SPRING* above.

Push valve stem, then pull valves (intake and exhaust) out of valve guide.

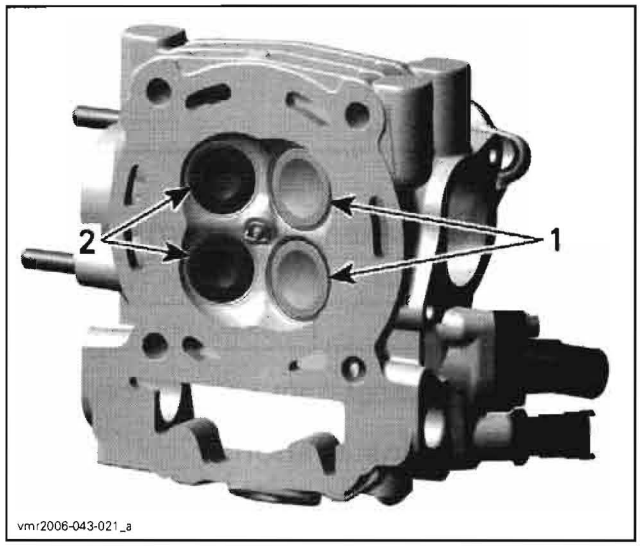

1. Intake valves 31 mm
2. Exhaust valves 27 mm

Remove valve stem seal **no. 8** with Snap-on pliers (P/N YA 8230) and discard it.

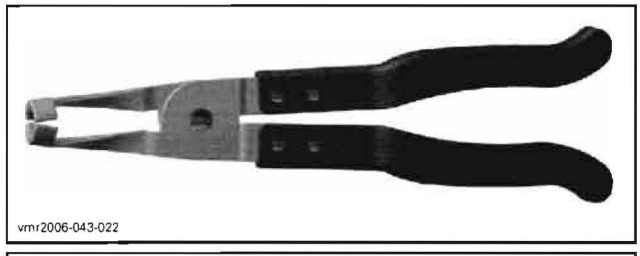



Valve Inspection

Valve Stem Seal

Always install new seals whenever valves are removed.

Valve

Inspect valve surface, check for abnormal stem wear and bending. If out of specification, replace by a new one.

VALVE OUT OF ROUND (intake and exhaust valves)	
NEW	0.005 mm (.0002 in)
SERVICE LIMIT	0.06 mm (.0024 in)

Valve Stem and Valve Guide Clearance

Measure valve stem and valve guide in three places using a micrometer and a small bore gauge.

NOTE: Clean valve guide to remove carbon deposits before measuring.

Change valve if valve stem is out of specification or has other damages such as wear or friction surface.

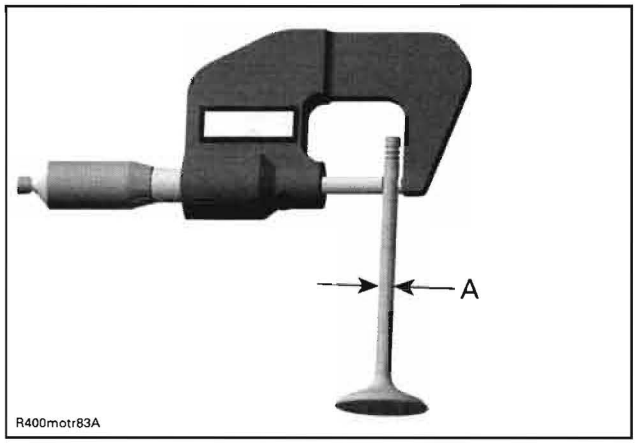

A. Valve stem diameter

VALVE STEM DIAMETER	
EXHAUST VALVE	
NEW	4.956 to 4.970 mm (.1951 to .1957 in)
SERVICE LIMIT	4.930 mm (.1941 in)
INTAKE VALVE	
NEW	4.966 to 4.980 mm (.1955 to .1960 in)
SERVICE LIMIT	4.930 mm (.1941 in)

www.midwestmanuals.com
Sales@midwestmanuals.com

www.midwestmanuals.com

Replace valve guide out of cylinder head if valve guide is out of specification or has other damages such as wear or friction surface (see *VALVE GUIDE PROCEDURE* below).

VALVE GUIDE DIAMETER (intake and exhaust valves)	
NEW	4.998 to 5.018 mm (.1968 to .1976 in)
SERVICE LIMIT	5.050 mm (.1988 in)

Valve Face and Seat

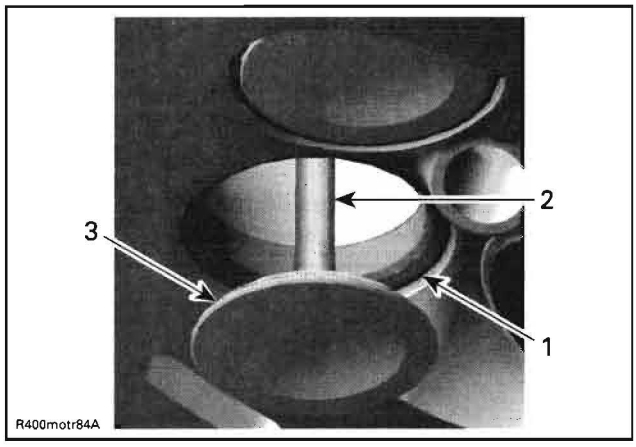

1. *Valve seat*
2. *Exhaust valve contaminated area*
3. *Valve face (contact surface to valve seat)*

Check valve face and seat for burning or pittings and replace valve or cylinder head if there are signs of damage.

Ensure to seat valves properly. Apply some lapping compound to valve face and work valve on its seat with a lapping tool (see *VALVE GUIDE PROCEDURE* below).

Measure valve face contact width.

NOTE: The location of contact area should be in center of valve seat.

Measure valve seat width using a caliper.

VALVE SEAT CONTACT WIDTH	
EXHAUST VALVE	
NEW	1.25 to 1.55 mm (.049 to .061 in)
SERVICE LIMIT	2.00 mm (.078 in)
INTAKE VALVE	
NEW	1.05 to 1.35 mm (.041 to .053 in)
SERVICE LIMIT	1.80 mm (.070 in)

If valve seat contact width is too wide or has dark spots, replace the cylinder head.

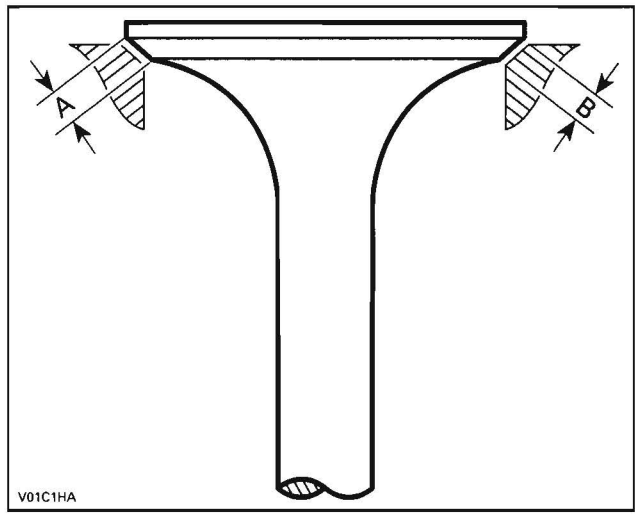

A. Valve face contact width
B. Valve seat contact width

Valve Installation

For installation, reverse the removal procedure. Pay attention to the following details.

Install a **NEW** valve stem seal. Make sure thrust washer is installed before installing seal.

Apply engine oil on valve stem and install it.

CAUTION: Be careful when valve stem is passed through sealing lips of valve stem seal.

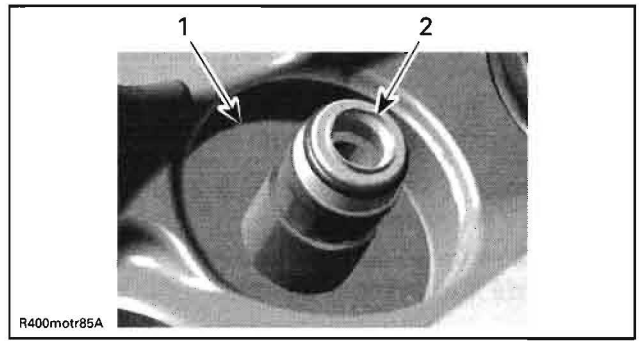

1. *Thrust washer*
2. *Sealing lips of valve stem seal*

To ease installation of cotters, apply oil or grease on them so that they remain in place while releasing the spring.

After spring is installed, ensure it is properly locked by tapping on valve stem end with a soft hammer so that valve opens and closes a few times.

CAUTION: An improperly locked valve spring will cause engine damage.

www.midwestmanuals.com
Sales@midwestmanuals.com

www.midwestmanuals.com

VALVE GUIDE

Valve Guide Removal

Remove cylinder head (see *CYLINDER HEAD* above).

Remove valves (see *VALVE* above).

NOTE: Clean valve guide area from contamination before removal.

Using the valve guide remover (P/N 529 035 924) and a hammer, drive the valve guide out of cylinder head.

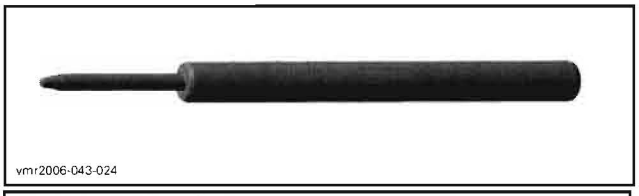

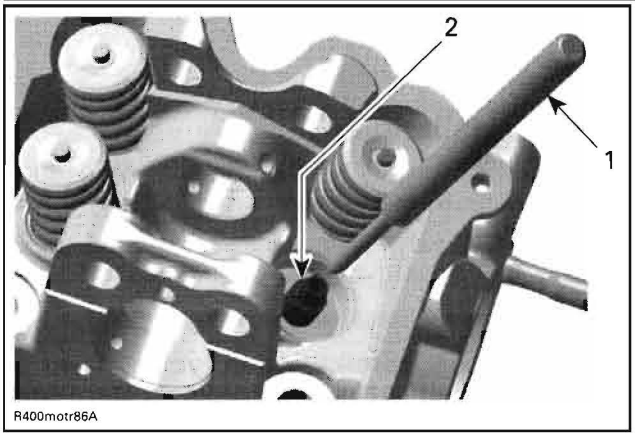

1. *Valve guide remover*
2. *Valve guide*

Valve Guide Inspection

Always replace valve stem seals whenever valve guides are removed.

Clean the valve guide bore before reinstalling the valve guide into cylinder head.

Valve Guide Installation

For installation, reverse the removal procedure. Pay attention to the following details.

Use the valve guide installer (P/N 529 035 853) to install valve guide.

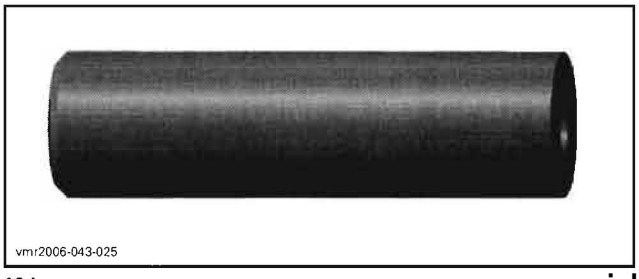

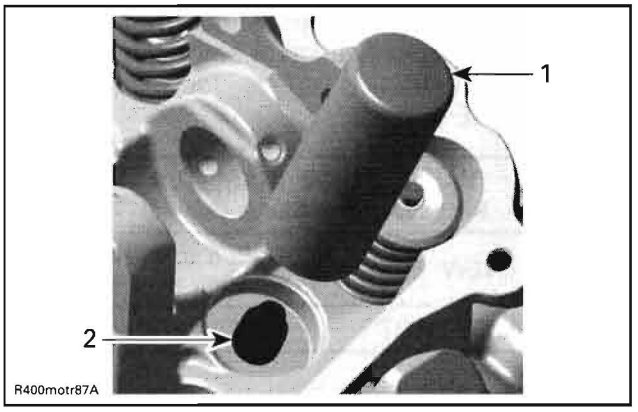

1. *Valve guide installer*
2. *Valve guide*

NOTE: Apply Loctite 767 (antiseize lubricant) (P/N 293 800 070) on valve guide prior to install it into the cylinder head.

CAUTION: Push valve guide in the cold cylinder head as per following illustration.

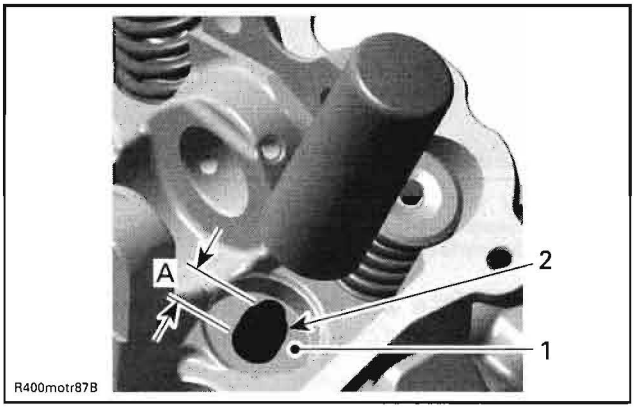

1. *Thrust surface of cylinder head*
2. *Valve guide*

A. *Measurement from thrust surface to valve guide top*

VALVE GUIDE (measurement "A")	
NEW	14.00 to 14.40 mm (.5512 to .5669 in)

Valve guide to be adjusted in diameter by using a reamer.

VALVE GUIDE DIAMETER (intake and exhaust valves)	
NEW	4.998 to 5.018 mm (.1968 to .1976 in)

www.midwestmanuals.com
Sales@midwestmanuals.com

www.midwestmanuals.com

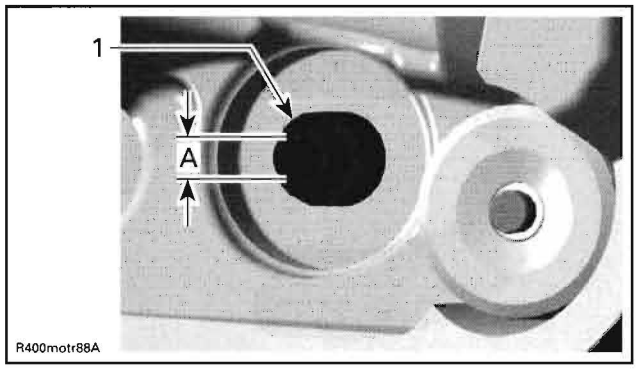

1. Valve guide
A. Valve guide diameter

NOTE: Ensure to turn reamer in the right direction. Use cutting oil and make brakes to clean reamer/valve guide from metal shavings.

Apply some lapping compound to valve face and work valve on its seat with a lapping tool.

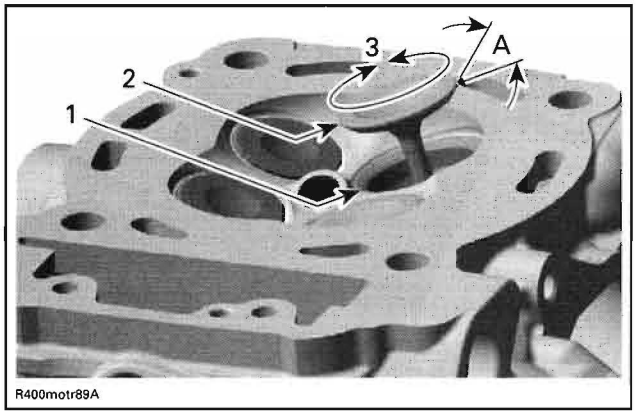

1. Valve seat
2. Valve face (contact surface to valve seat)
3. Turn valve while pushing against cylinder head
A. Valve seat angle 45°

NOTE: Ensure to seat valves properly. Apply marking paste to ease checking contact pattern.

Repeat procedure until valve seat/valve face fits together.

CYLINDER

Cylinder Removal

Remove chain tensioner (see *CHAIN TENSIONER*).

Remove the camshaft timing gear (see *CAMSHAFT TIMING GEAR*).

Remove the cylinder head (see *CYLINDER HEAD*).

Pull cylinder.

Discard cylinder base gaskets.

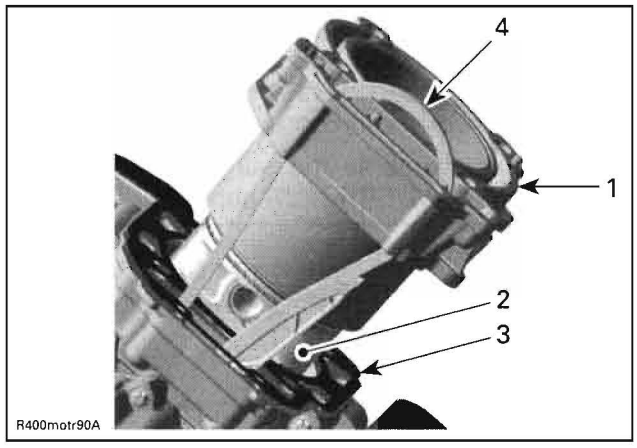

1. Cylinder
2. Piston assembly
3. Cylinder base gasket
4. Camshaft timing chain

Cylinder Inspection

Check cylinder for cracks, scoring and wear ridges on the top and bottom of the cylinder. If so, replace cylinder.

Cylinder Taper

Measure cylinder bore and if it is out of specifications, replace cylinder and piston rings.

Measure cylinder bore at 3 recommended positions. See the following illustration.

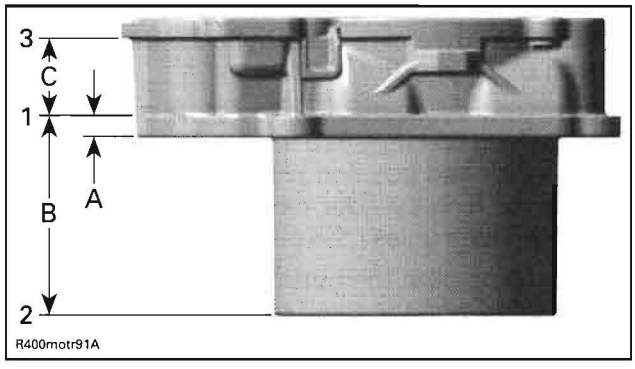

1. First measuring of diameter
2. Second measuring of diameter
3. Third measuring of diameter
A. 7 mm (.276 in) from cylinder bottom
B. 68 mm (2.68 in)
C. 32 mm (1.260 in)

CYLINDER TAPER IN DIAMETER	
NEW (maximum)	0.038 mm (.0015 in)
SERVICE LIMIT	0.090 mm (.0035 in)

Distance between measurements should not exceed the service limit mentioned above.

www.midwestmanuals.com
Sales@midwestmanuals.com

www.midwestmanuals.com

Cylinder Out of Round

Measure cylinder diameter in piston axis direction from top of cylinder. Take another measurement 90° from first one and compare.

NOTE: Take the same measuring points like described in *CYLINDER TAPER* above.

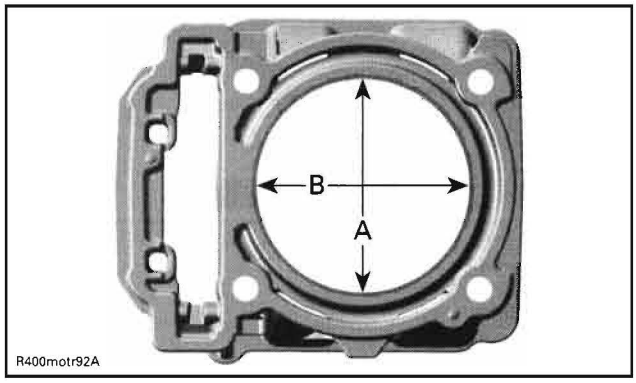

A. Perpendicular to crankshaft axis
B. Parallel to crankshaft axis

CYLINDER OUT OF ROUND	
NEW (maximum)	0.015 mm (.0006 in)
SERVICE LIMIT	0.020 mm (.0008 in)

Cylinder Installation

For installation, reverse the removal procedure. Pay attention to the following details.

CAUTION: Always replace cylinder base gasket before installing the cylinder.

First mount cylinder 2. Then remove the crankshaft locking bolt (P/N 529 035 617). Crank the engine further and position piston 1 at TDC. Mount cylinder 1. The cylinder can not be pushed fully over the piston unless the piston is located at TDC.

Apply engine oil in the bottom area of the cylinder bore and also on the band of the piston ring compressor tool.

ENGINE	TOOL
V490/V660	Piston ring compressor (P/N 529 035 977)
V810	Piston ring compressor (P/N 529 035 919)

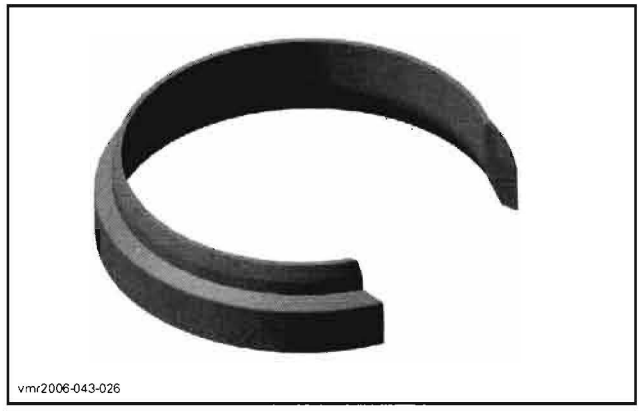

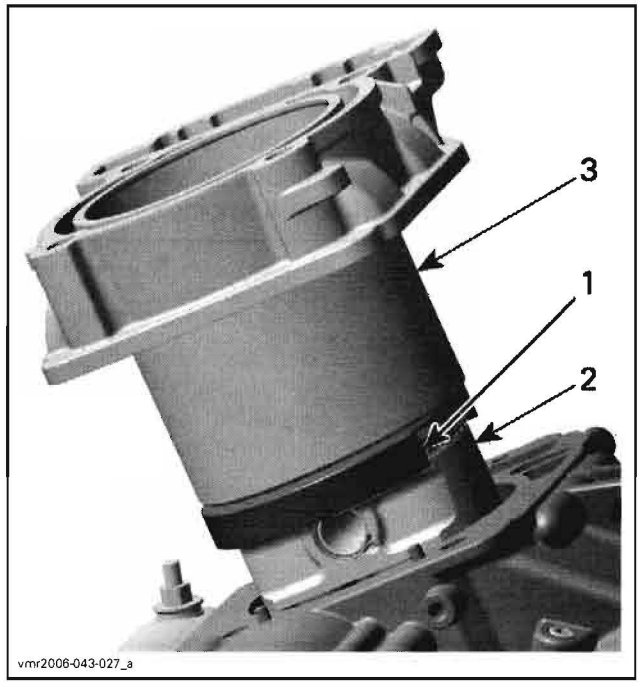

1. Piston ring compressor tool
2. Piston
3. Cylinder

NOTE: Put timing chain through the chain pit then put the cylinder in place.

CAUTION: Chain guide has to be fixed between cylinder and cylinder head.

NOTE: After both cylinders are installed, turn crankshaft until piston of cylinder 2 is at TDC ignition and lock crankshaft. Refer to *CAMSHAFT*.

Install cylinder head and the other parts in accordance with the proper installation procedures.

PISTON

Piston Removal

Remove cylinder head (see *CYLINDER HEAD* above).

Remove the cylinder (see *CYLINDER* above).

www.midwestmanuals.com
Sales@midwestmanuals.com

www.midwestmanuals.com

Place a rag under piston and in the area of timing chain compartment.

⚠ WARNING

Piston circlips are spring loaded.

Remove one piston circlip and discard it.

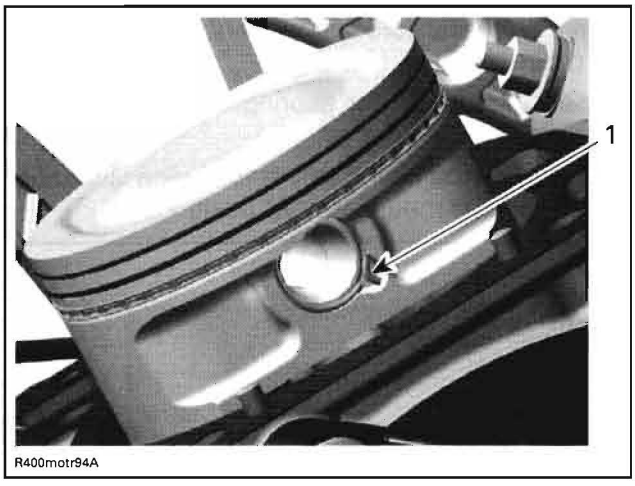

1. Piston circlip

NOTE: The removal of both piston circlips is not necessary to remove piston pin.

Push piston pin out of piston.

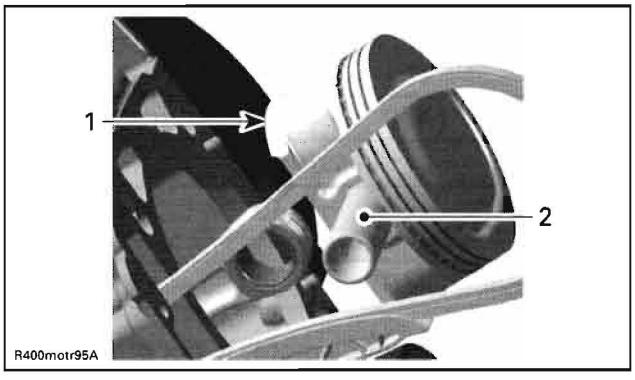

1. Piston
2. Piston pin

Detach piston from connecting rod.

Piston Inspection

Inspect piston for scoring, cracking or other damages. Replace piston and piston rings if necessary.

Using a micrometer, measure piston at 8 mm (.315 in) perpendicularly (90°) to piston pin.

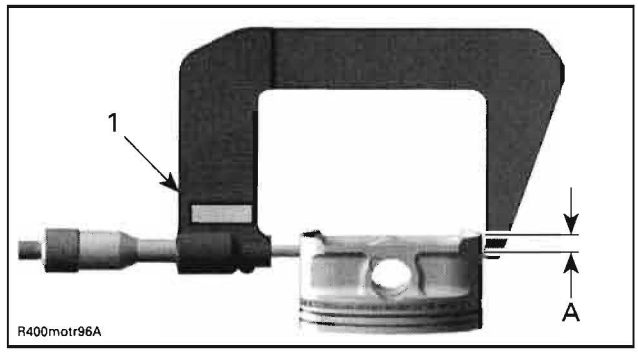

1. Measuring perpendicularly (90°) to piston pin
A. 8 mm (.315 in)

The measured dimension should be as described in the following tables. If not, replace piston.

PISTON MEASUREMENT	
V490/V660	
NEW	81.950 to 81.966 mm (3.2264 to 3.2270 in)
SERVICE LIMIT	81.850 mm (3.2224 in)
V810	
NEW	90.950 to 90.966 mm (3.5807 to 3.5813 in)
SERVICE LIMIT	90.850 mm (3.577 in)

Piston/Cylinder Clearance

Adjust and lock a micrometer to the piston dimension.

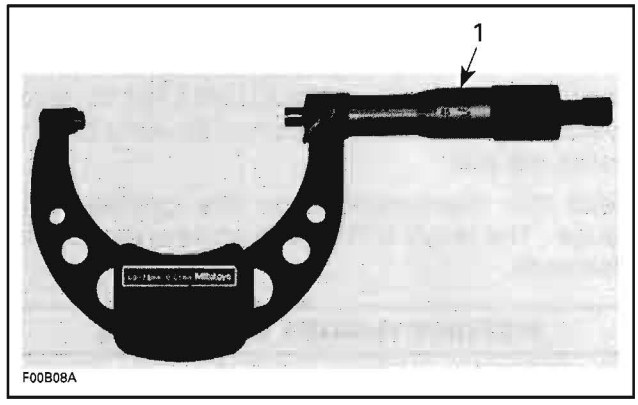

1. Micrometer set to the piston dimension

With the micrometer set to the dimension, adjust a cylinder bore gauge to the micrometer dimension and set the indicator to 0 (zero).

www.midwestmanuals.com
Sales@midwestmanuals.com

www.midwestmanuals.com

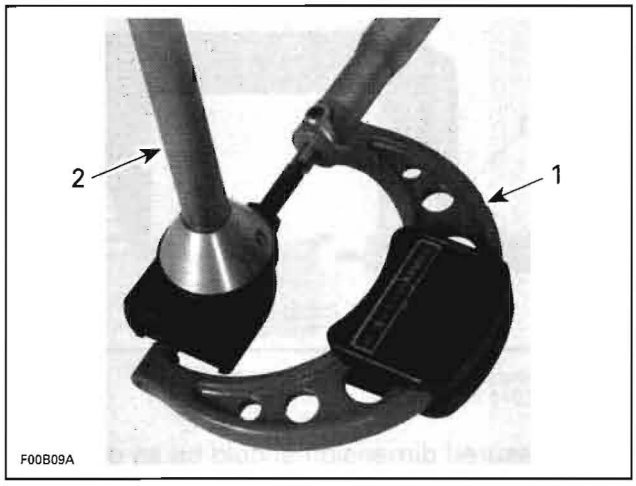

1. Use the micrometer to set the cylinder bore gauge
2. Dial bore gauge

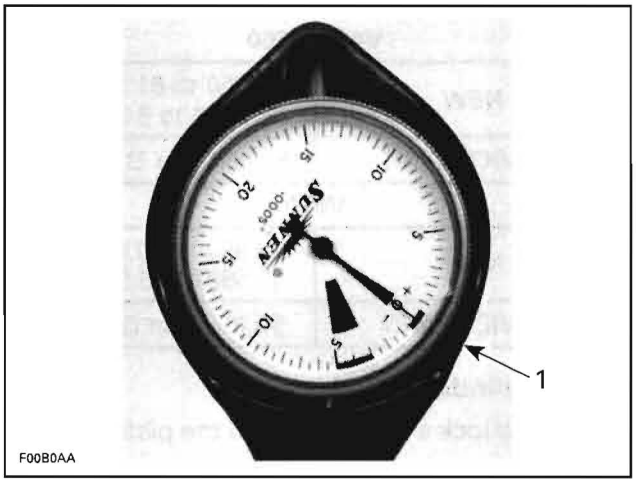

TYPICAL
1. Indicator set to 0 (zero)

Position the dial bore gauge 20 mm (.787 in) above cylinder base, measuring perpendicularly (90°) to piston pin axis.

Read the measurement on the cylinder bore gauge. The result is the exact piston/cylinder wall clearance.

PISTON/CYLINDER CLEARANCE	
V490/V660	
NEW	0.057 to 0.087 mm (.0022 to .0034 in)
SERVICE LIMIT	0.130 mm (.0051 in)
V810	
NEW	0.027 to 0.057 mm (.0011 to .0022 in)
SERVICE LIMIT	0.100 mm (.0040 in)

NOTE: Make sure used piston is not worn.

If clearance exceeds specified tolerance, replace piston by a new one and measure piston/cylinder clearance again.

NOTE: Make sure the cylinder bore gauge indicator is set exactly at the same position as with the micrometer, otherwise the reading will be false.

Connecting Rod/Piston Pin Clearance

Using synthetic abrasive woven, clean piston pin from deposits.

Inspect piston pin for scoring, cracking or other damages.

Measure piston pin. See the following illustration for the proper measurement positions.

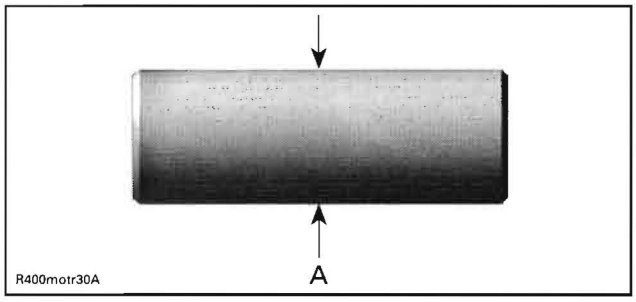

A. Piston pin diameter

PISTON PIN DIAMETER	
V490	
NEW	17.996 to 18.000 mm (.7085 to .7087 in)
SERVICE LIMIT	17.980 mm (.7079 in)
V660/V810	
NEW	19.996 to 20.000 mm (.7872 to .7874 in)
SERVICE LIMIT	19.980 mm (.7866 in)

Replace piston pin if diameter is out of specifications.

Measure inside diameter of connecting rod small end bushing.

www.midwestmanuals.com
Sales@midwestmanuals.com

www.midwestmanuals.com

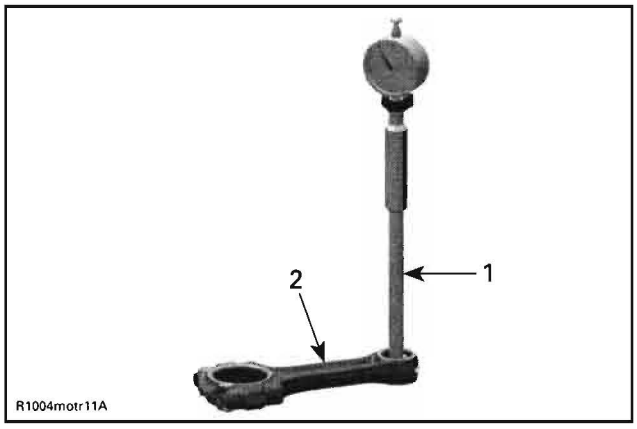

1. *Bore gauge*
2. *Connecting rod*

CONNECTING ROD SMALL END DIAMETER	
V490	
NEW	18.010 to 18.020 mm (.7091 to .7095 in)
SERVICE LIMIT	18.060 mm (.7110 in)
V660/V810	
NEW	20.010 to 20.020 mm (.7878 to .7882 in)
SERVICE LIMIT	20.060 mm (.7898 in)

Replace connecting rod if diameter of connecting rod small end is out of specifications. Refer to *BOTTOM END* for removal procedure.

Compare measurements to obtain the connecting rod/piston pin clearance.

CONNECTING ROD/ PISTON PIN CLEARANCE	
ALL ENGINES	
SERVICE LIMIT	0.080 mm (.0035 in)

Piston Installation

For installation, reverse the removal procedure. Pay attention to the following details.

Apply engine oil on the piston pin.

Insert piston pin into piston and connecting rod.

CAUTION: The mounting direction of the pistons is different between the V490/V660 and the V810.

V490 and V660 Engines

For each cylinder, install piston with the punched arrow on piston dome is pointing toward the exhaust side.

Front cylinder: Mark on top of piston must show to exhaust side.

Rear cylinder: Mark on top of piston must show to exhaust side.

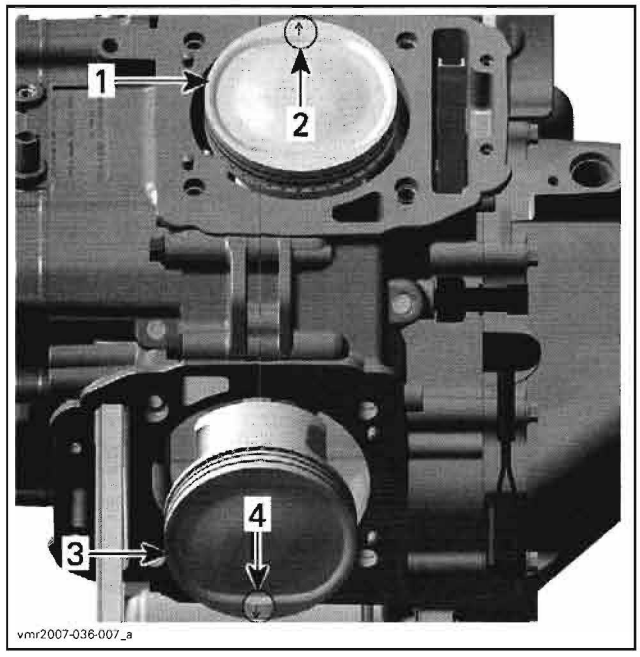

1. *Piston of cylinder 1*
2. *Mark on piston must show to exhaust side of cylinder 1*
3. *Piston of cylinder 2*
4. *Mark on piston must show to exhaust side of cylinder 2*

V810 Engines

For each cylinder, install piston with the punched arrow on piston dome is pointing toward the rear side of the engine.

Front cylinder: Mark on top of piston must show to intake side.

Rear cylinder: Mark on top of piston must show to exhaust side.

www.midwestmanuals.com
Sales@midwestmanuals.com

www.midwestmanuals.com

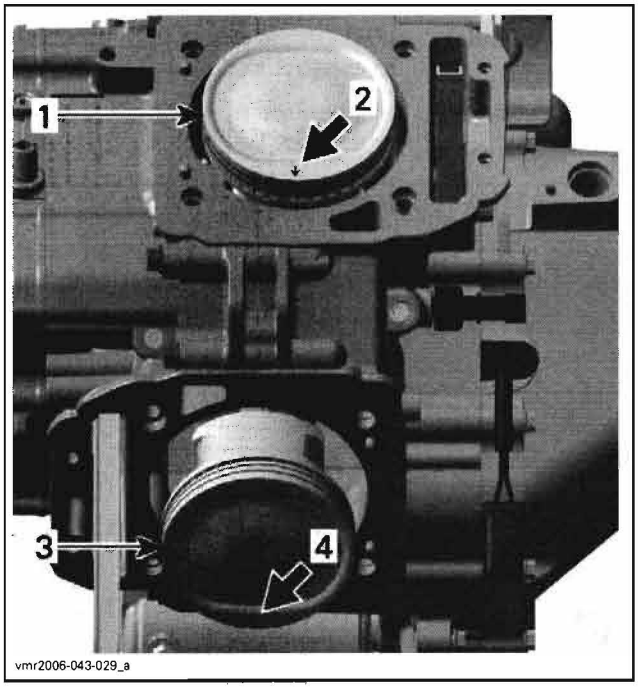

1. *Piston of cylinder 1*
2. *Mark on piston must show to intake side of cylinder 1*
3. *Piston of cylinder 2*
4. *Mark on piston must show to exhaust side of cylinder 2*

Use the piston appropriate circlip installer to assemble the **NEW** piston circlip as per following procedure:

ENGINE TYPE	TOOL
V490	Circlip installer (P/N 529 036 058)
V660 and V810	Circlip installer (P/N 529 035 921)



CAUTION: Always replace disassembled piston circlip(s) by new ones. Place a rag on cylinder base to avoid dropping the circlip inside the engine.

Place circlip in sleeve as per following illustration.

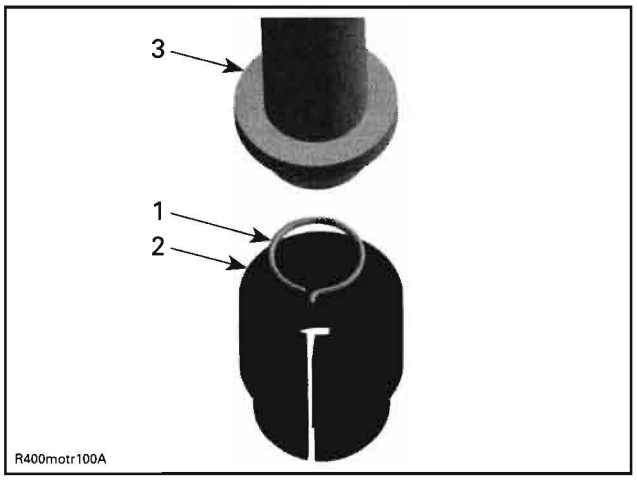

1. *Circlip*
2. *Sleeve*
3. *Assembly jig from piston clip installer*

Push taper side of assembly jig until circlip reaches middle of sleeve.

Align sleeve with piston pin axis and push assembly jig until circlip engages in piston.

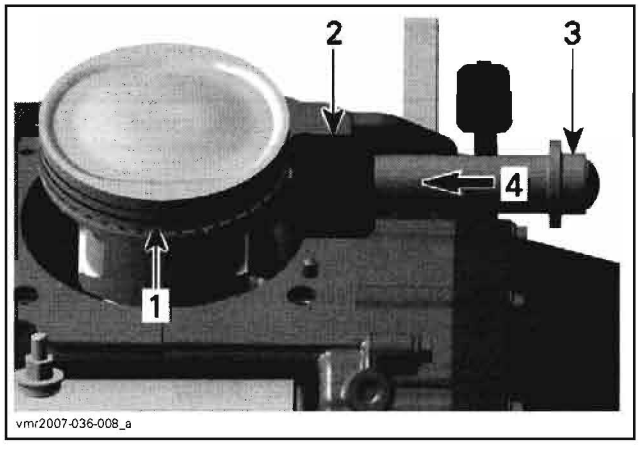

1. *Hold piston while pushing circlip in place*
2. *Sleeve*
3. *Assembly jig*
4. *Direction to push circlip*

NOTE: Take care that the hook of the piston circlip is positioned properly.

www.midwestmanuals.com
Sales@midwestmanuals.com

www.midwestmanuals.com

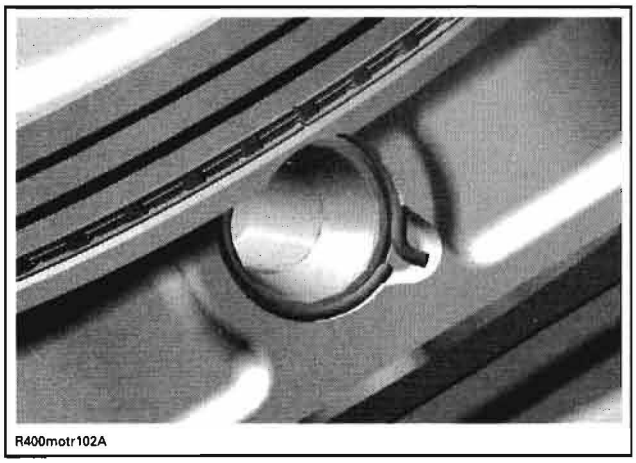

CORRECT POSITION OF THE PISTON CIRCLIP

PISTON RINGS

Ring Removal

Remove the piston (see *PISTON* above).

Ring Inspection

Ring/Piston Groove Clearance

Using a feeler gauge measure each ring/piston groove clearance. If the clearance is too large, the piston and the piston rings should be replaced.

RING/PISTON GROOVE CLEARANCE	
UPPER COMPRESSION RING	
NEW	0.030 to 0.070 mm (.0012 to .0028 in)
SERVICE LIMIT	0.150 mm (.0059 in)
LOWER COMPRESSION RING	
NEW	0.020 to 0.060 mm (.0008 to .0024 in)
SERVICE LIMIT	0.150 mm (.0059 in)
OIL SCRAPER RING	
NEW	0.010 to 0.180 mm (.0004 to .0071 in)
SERVICE LIMIT	0.250 mm (.0098 in)

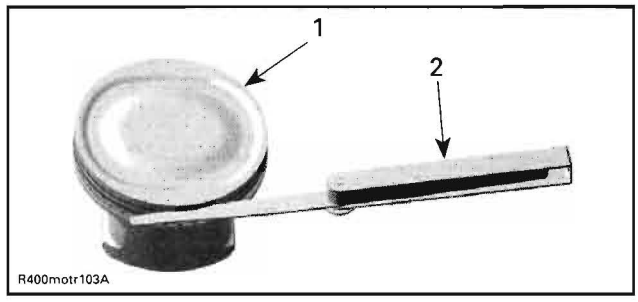

1. Piston
2. Feeler gauge

Ring End Gap

RING END GAP	
UPPER COMPRESSION RING	
NEW	0.20 to 0.40 mm (.008 to .016 in)
SERVICE LIMIT	1.50 mm (.059 in)
LOWER COMPRESSION RING	
NEW	0.20 to 0.40 mm (.008 to .016 in)
SERVICE LIMIT	1.50 mm (.059 in)
OIL SCRAPER RING	
NEW	0.20 to 0.70 mm (.008 to .028 in)
SERVICE LIMIT	1.50 mm (.059 in)

To measure the ring end gap place the ring in the cylinder in the area of 8 to 16 mm (5/16 to 5/8 in) from top of cylinder.

NOTE: In order to correctly position the ring in the cylinder, use piston as a pusher.

Using a feeler gauge, check ring end gap. Replace ring if gap exceeds above described specified tolerance.

Ring Installation

For installation, reverse the removal procedure. Pay attention to the following details.

NOTE: First install spring and then rings of oil scraper ring.

Install the oil scraper ring first, then the lower compression ring with the word "N and TOP " facing up, then the upper compression ring with the word "N and TOP" facing up.

www.midwestmanuals.com
Sales@midwestmanuals.com

www.midwestmanuals.com

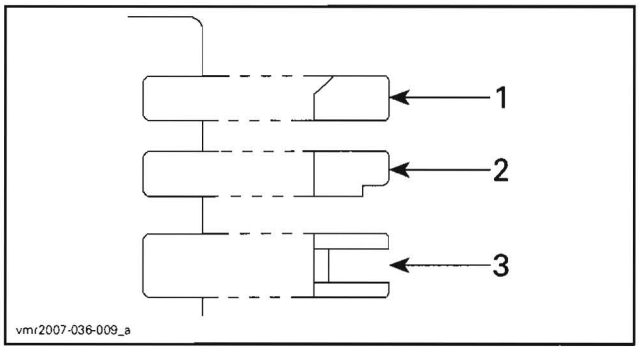

1. Upper compression ring
2. Lower compression ring
3. Oil scraper ring

CAUTION: Ensure that top and second rings are not interchanged.

NOTE: Use a ring expander to prevent breakage during installation. The oil ring must be installed by hand.

Check that rings rotate smoothly after installation.

Space the piston ring end gaps 120° apart and do not align the gaps with the piston pin bore or the thrust side axis.

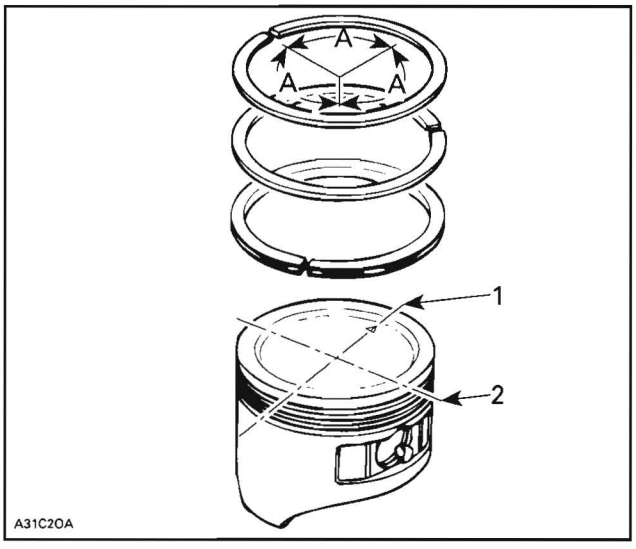

1. DO NOT align ring gap with piston thrust side axis
2. DO NOT align ring gap with piston pin bore axis
A. 120°

www.midwestmanuals.com
Sales@midwestmanuals.com

www.midwestmanuals.com

BOTTOM END

SERVICE TOOLS

Description	Part Number	Page
crankshaft locking bolt	529 035 617	129
plain bearing remover/installer	529 035 917	126
oil seal installer	529 036 028	118
oil seal protection sleeve	529 036 029	118
crankcase support sleeve	529 036 031	126
plain bearing remover/installer	529 036 032	120–121
oil seal installer	529 036 033	119

SERVICE PRODUCTS

Description	Part Number	Page
Loctite 5910	293 800 081	118
Loctite chisel	413 708 500	118



sales@midwestmanuals.com
www.midwestmanuals.com

www.midwestmanuals.com
Sales@midwestmanuals.com

www.midwestmanuals.com

ENGINE DRIVE SHAFT

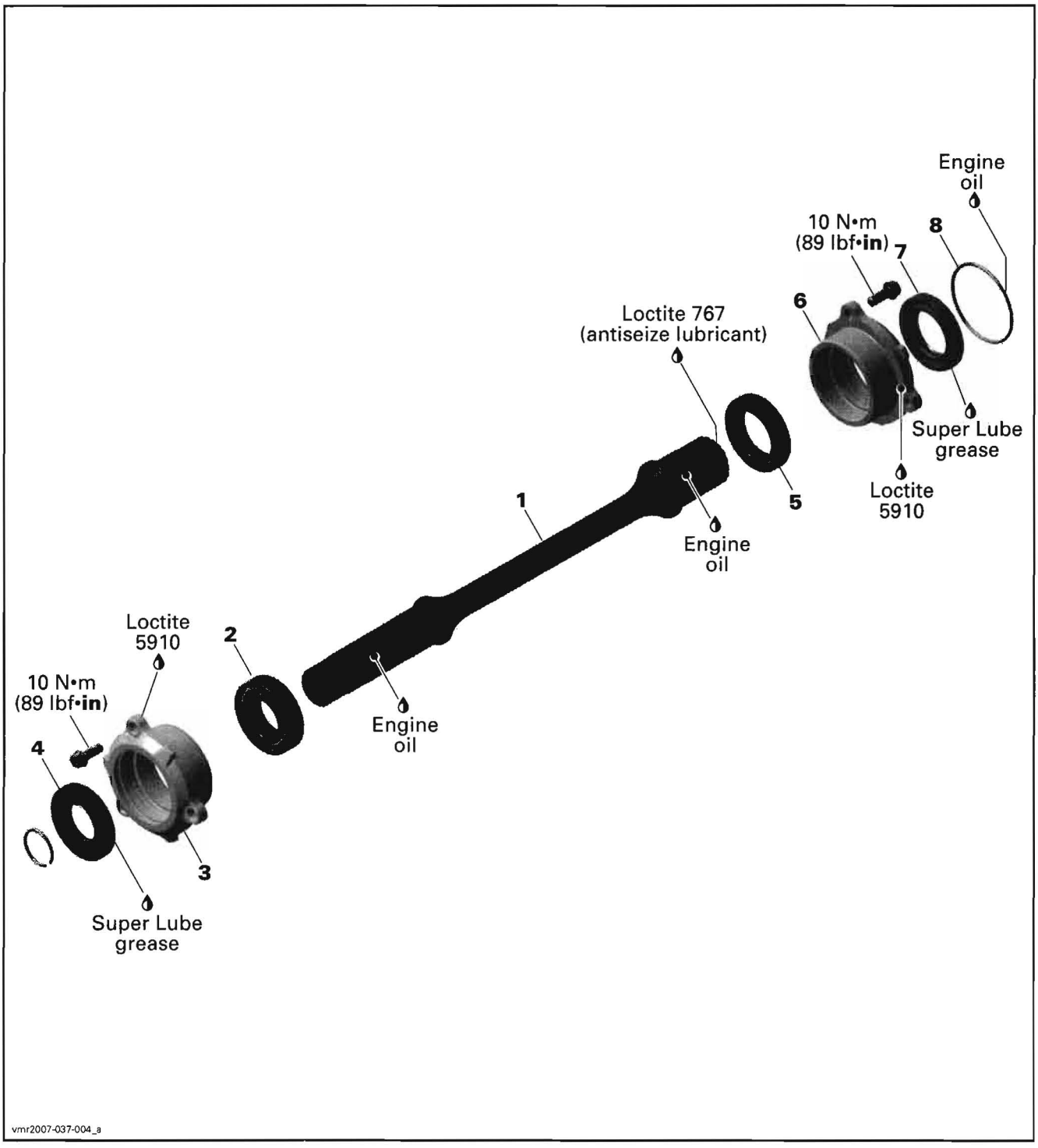

www.midwestmanuals.com
Sales@midwestmanuals.com

www.midwestmanuals.com

CRANKCASE AND PTO COVER

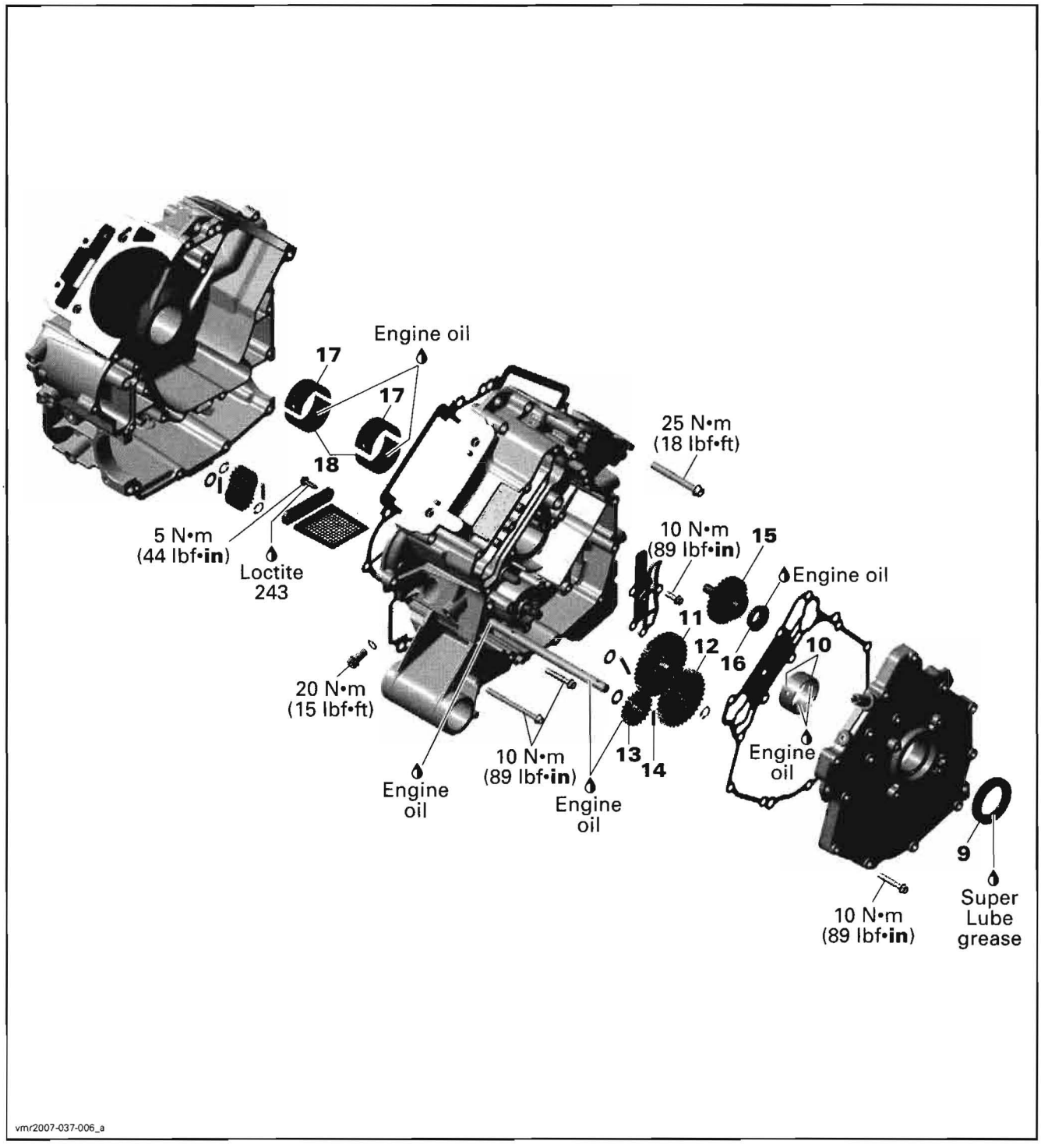

www.midwestmanuals.com
Sales@midwestmanuals.com

www.midwestmanuals.com

CRANKSHAFT

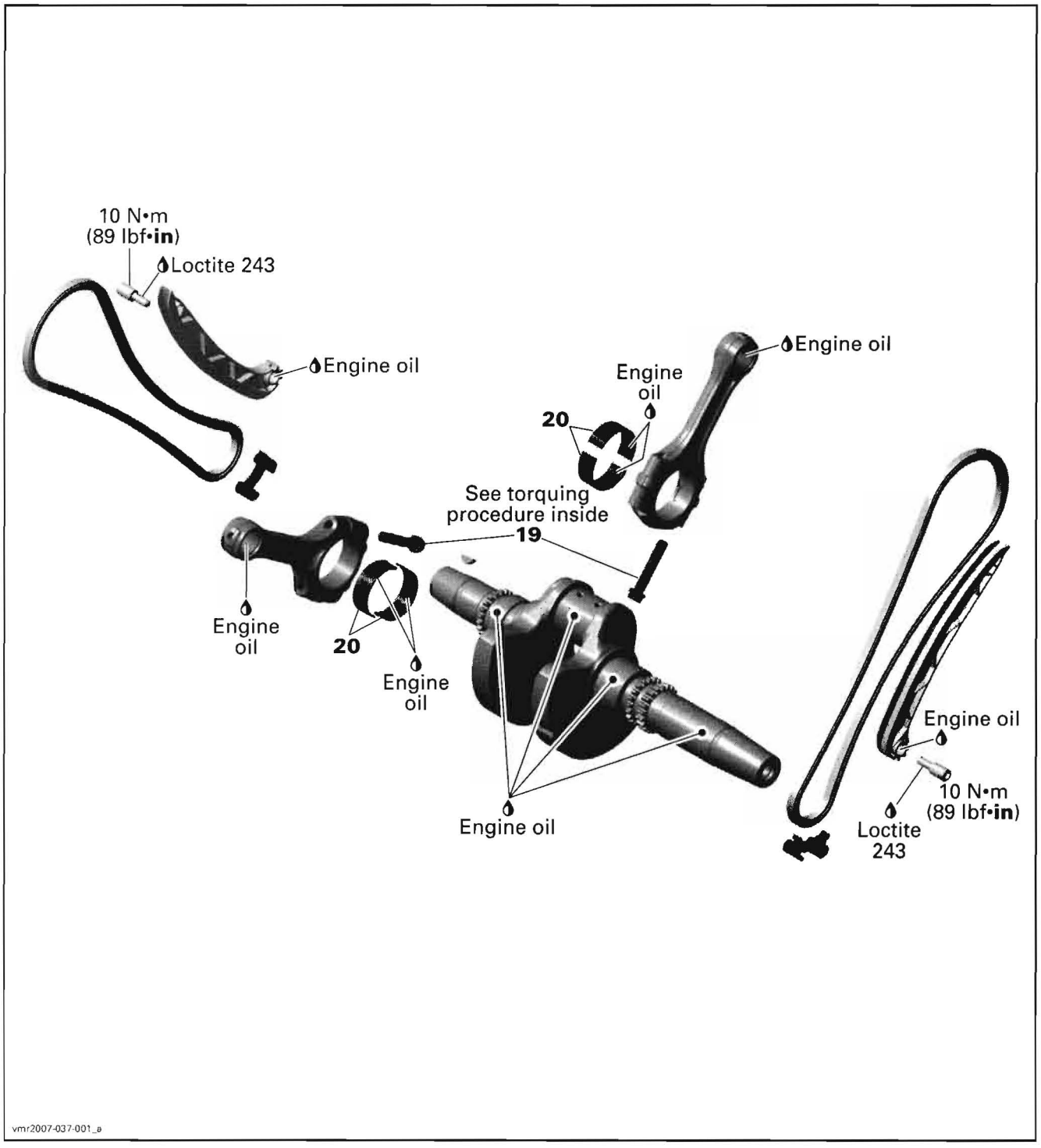

www.midwestmanuals.com
Sales@midwestmanuals.com

www.midwestmanuals.com

GENERAL

During assembly/installation, use the torque values and service products as shown in the exploded view(s).

Clean threads before applying a threadlocker. Refer to *SELF-LOCKING FASTENERS* and *LOCTITE APPLICATION* in *INTRODUCTION* section.

⚠ WARNING

Torque wrench tightening specifications must strictly be adhered to.
Locking devices (e.g.: locking tabs, elastic stop nuts, self-locking fasteners, cotter pin, etc.) must be replaced with new ones where specified.

PROCEDURES

ENGINE DRIVE SHAFT

Oil Seal Removal

To remove the front oil seal **no. 4**, no need to remove the engine. Lift the front of vehicle to avoid engine oil spillage. Separate the front propeller shaft from engine, refer to *FRONT DRIVE*.

For the rear oil seal **no. 7** the gearbox removal is necessary.

For oil seal installation, refer to *ENGINE DRIVE SHAFT INSTALLATION*.

Engine Drive Shaft Removal

NOTE: The engine drive shaft **no. 1** is located inside the engine and comes through it to drive the front differential.

Separate gearbox from engine.

To the rear of engine, remove the bearing cover and its O-ring.

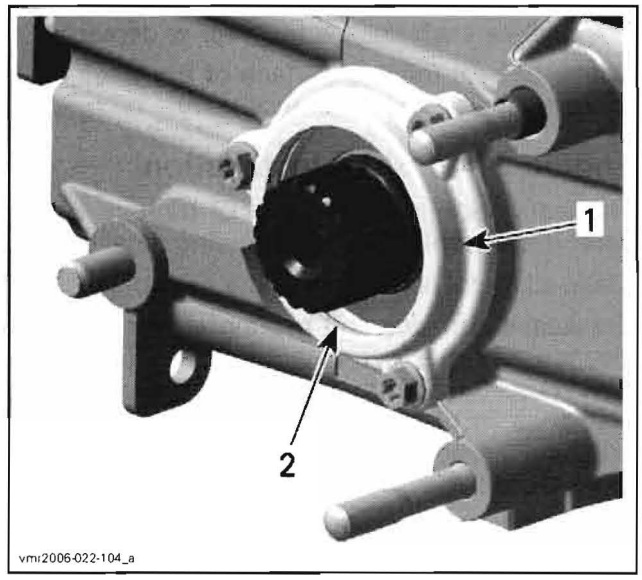

1. *Bearing cover*
2. *O-ring*

Pull out drive shaft **no. 1**.

CAUTION: Check ends of the circlip for sharp edges or burr before removing the drive shaft, to avoid damaging the oil seal.

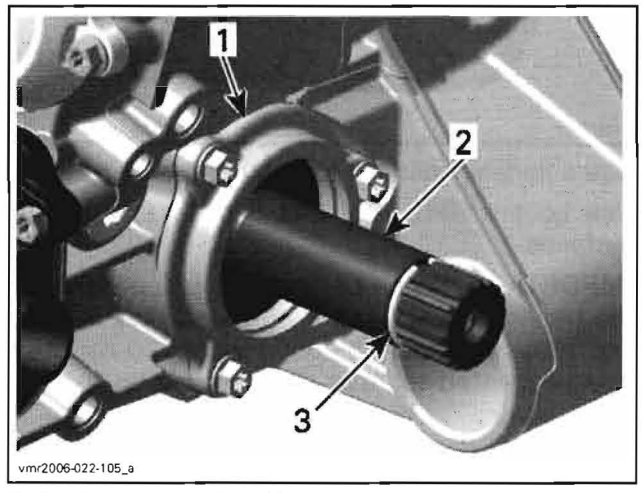

1. *Bearing cover gearbox side*
2. *Drive shaft*
3. *Circlip*

Remove the other bearing cover **no. 3** at the front of engine.

Engine Drive Shaft Inspection

Replace oil seals **no. 4** and **no. 7** and/or O-ring **no. 8** if they are brittle, hard or damaged.

Check drive shaft bearings **no. 2** and **no. 5** for contamination and/or metal shavings. Check if bearings turn freely and smoothly. Replace if necessary.

Check drive shaft for cracks, bend, pitting or other visible damages.

www.midwestmanuals.com
Sales@midwestmanuals.com

www.midwestmanuals.com

Check drive shaft splines for wear or damages.

Check oil seal running surface of the drive shaft for scratches. Replace if necessary.

Engine Drive Shaft Installation

The installation is the reverse of removal procedure. Pay attention to the following details.

Clean all metal components in a solvent.

Crankcase surfaces and bearing covers are best cleaned using a combination of Loctite chisel (P/N 413 708 500) and a brass brush. Brush a first pass in one direction then make the final brushing perpendicularly (90°) to the first pass cross (hatch).

CAUTION: Do not wipe with rags. Use a new clean hand towel only.

Then install drive shaft oil seals **no. 4** and **no. 7** with the oil seal installer (P/N 529 036 028).

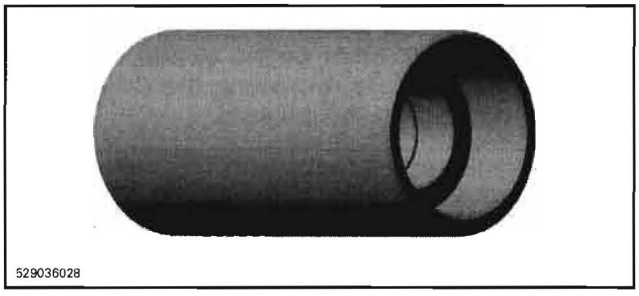

Use a suitable installer for installing bearings.

Use Loctite 5910 (P/N 293 800 081) on mating surfaces.

IMPORTANT: When beginning the application of the bearing cover sealant, the assembly and the first torquing should be done within 10 minutes. It is suggested to have all you need on hand to save time.

Use a plexiglass plate and apply some sealant on it. Use a soft rubber roller (50 - 75 mm (2 - 3 in)), available in arts products suppliers for printing, and roll the sealant to get a thin uniform coat on the plate (spread as necessary). When ready, apply the sealant on bearing cover surfaces.

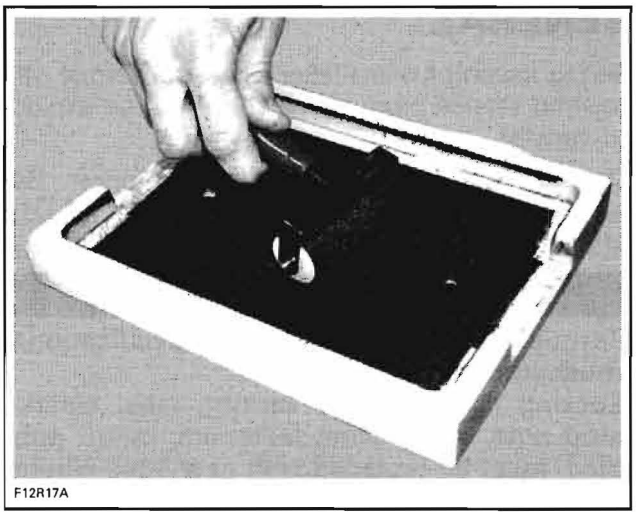

Do not apply in excess as it will spread out inside crankcase.

NOTE: It is recommended to apply this specific sealant as described here to get a uniform application without lumps. If you do not use the roller method, you may use your finger to uniformly distribute the sealant (using a finger will not affect the adhesion).

To install bearing cover **no. 6**, fit oil seal protection sleeve (P/N 529 036 029) into oil seal.

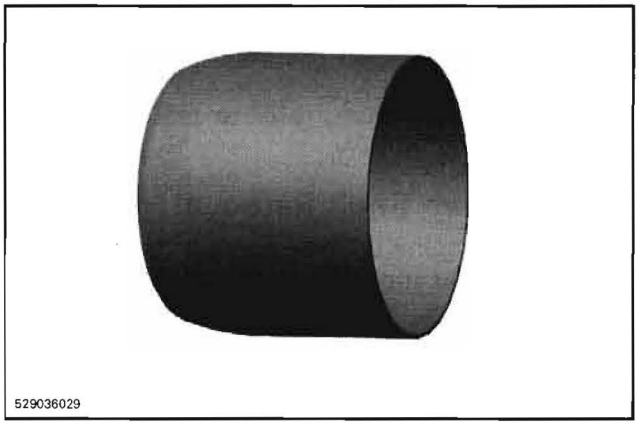

www.midwestmanuals.com
Sales@midwestmanuals.com

www.midwestmanuals.com

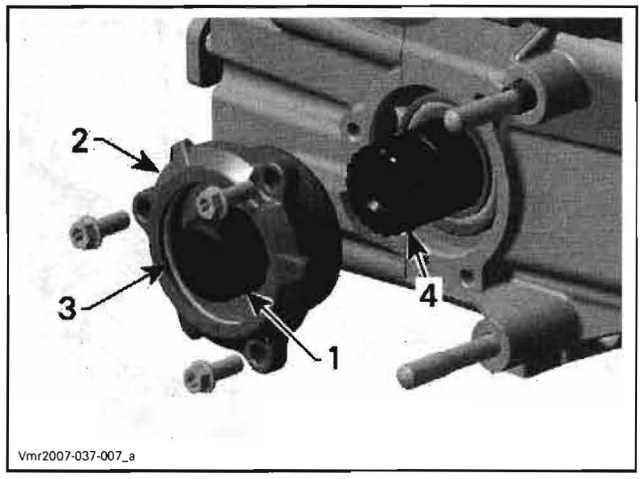

1. *Protection sleeve*
2. *Bearing cover*
3. *O-ring*
4. *Drive shaft*

Install bearing cover then place the O-ring **no. 8** inside cover.

Finally check for axial play of the drive shaft.

PTO COVER OIL SEAL

To replace oil seal **no. 9** it is not necessary to remove engine from vehicle.

PTO Oil Seal Removal

Remove CVT cover, drive and driven pulleys and air guide.

Remove oil seal **no. 9** with a small flat screwdriver.

CAUTION: Avoid scoring surfaces with tool.

PTO Oil Seal Inspection

Check oil seal running surface of crankshaft PTO side for grooves. Replace if necessary.

PTO Oil Seal Installation

The installation is the reverse of the removal procedure.

Pay attention to the following details.

CAUTION: Oil seal must be installed with sealing lip toward the engine.

Push oil seal in place by using the oil seal installer (P/N 529 036 033).

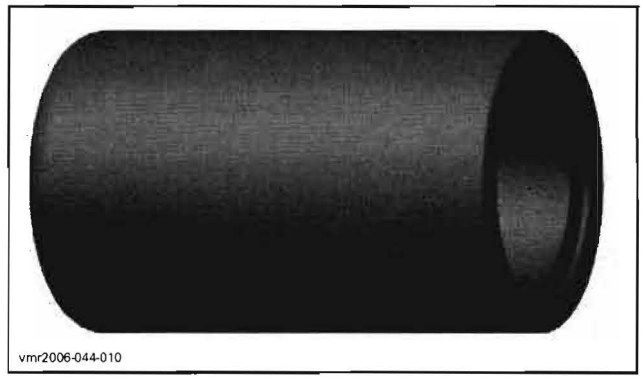

OIL SEAL INSTALLER

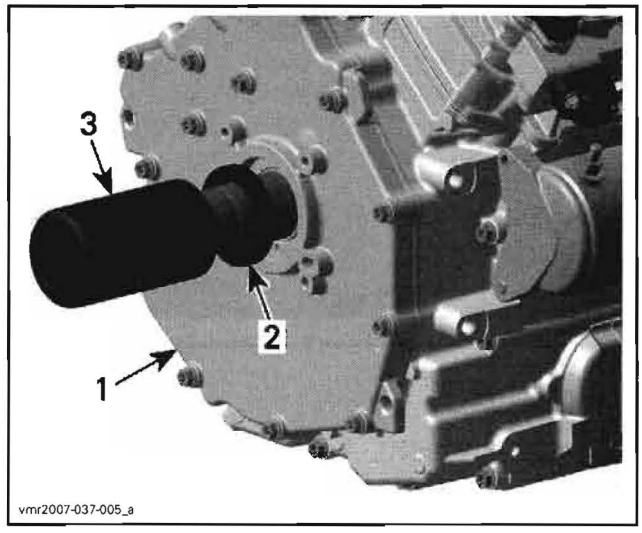

1. *PTO cover*
2. *Oil seal*
3. *Oil seal installer*

PTO COVER

PTO Cover Removal

Remove:

- CVT and air guide. Refer to *TRANSMISSION*)
- disconnect vent hose
- PTO cover screws and pull PTO cover.

www.midwestmanuals.com
Sales@midwestmanuals.com

www.midwestmanuals.com

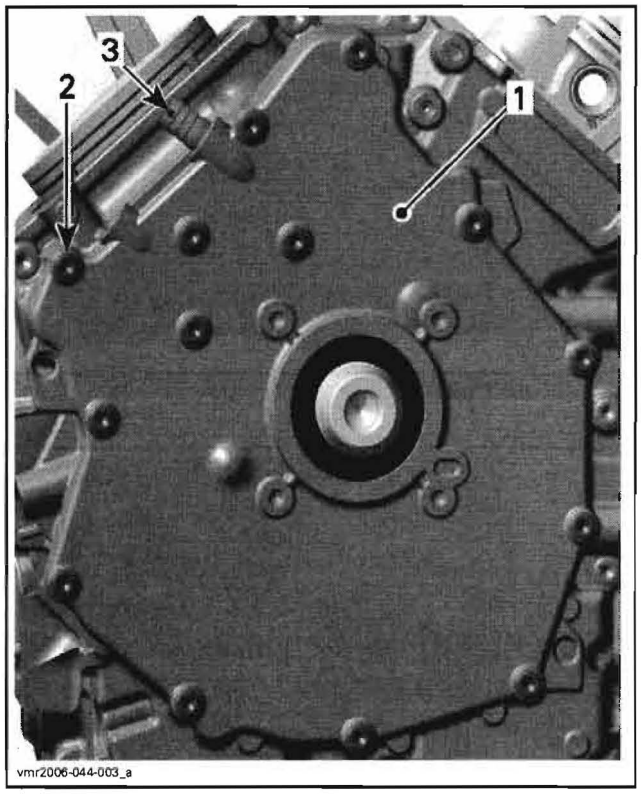

1. *PTO cover*
2. *PTO cover screws*
3. *Vent hose nipple*

PTO Cover Inspection

Check the PTO cover for cracks or other damage.

Replace PTO cover if damaged.

Clean oil breather bore in PTO cover from contaminations with part cleaner then use an air gun to dry it.

⚠ WARNING

Always wear eye protector. Chemicals can cause a rash break out and injure your eyes.

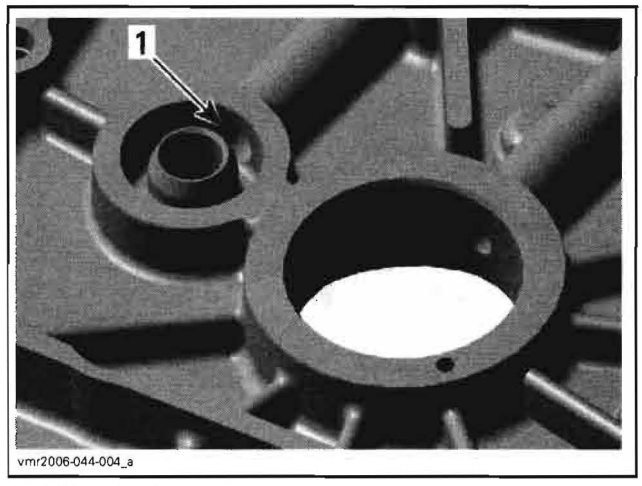

1. *Oil breather bore*

Check plain bearings **no. 10** for scorings or other damages.

NOTE: Measure plain bearing inside diameter and compare to crankshaft journal diameter (PTO support bearing). Refer to *CRANKSHAFT* in this section. Replace if the measurement is out of specification.

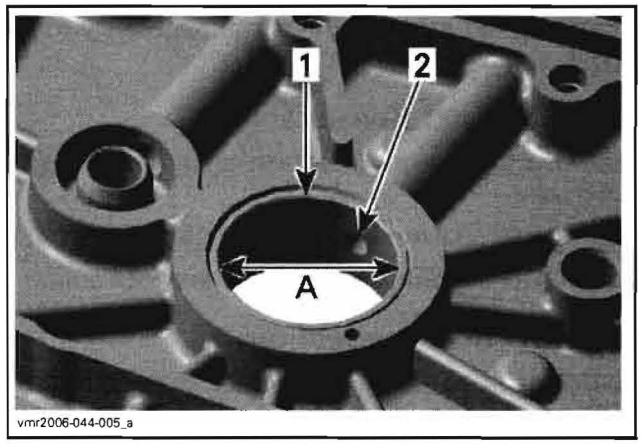

1. *Plain bearing*
2. *Oil bore*

A. Measure plain bearing inside diameter

PLAIN BEARING INSIDE DIAMETER (PTO side support bearing)	
SERVICE LIMIT	34.120 mm (1.3433 in)

Plain Bearing Replacement Procedure

Plain Bearing Removal

Carefully remove the oil seal **no. 9** with a screwdriver, without damaging the PTO cover.

Push-out the plain bearings from the outside towards the inside using the plain bearing remover/installer (P/N 529 036 032).

www.midwestmanuals.com
Sales@midwestmanuals.com

www.midwestmanuals.com

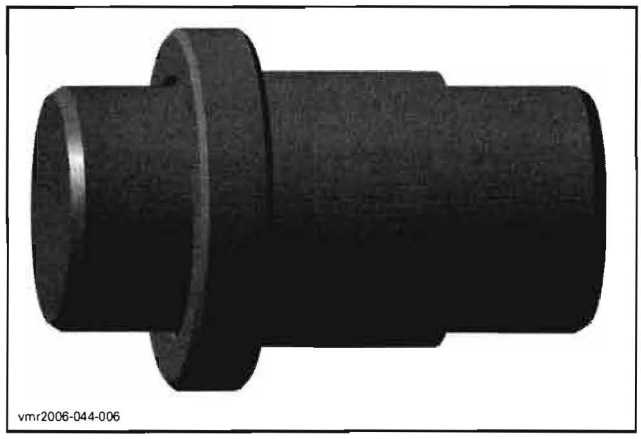

PLAIN BEARING REMOVER/INSTALLER — PTO COVER

The PTO cover has to be supported from below with suitable support with straight surface, in order to prevent damage of the sealing surface.

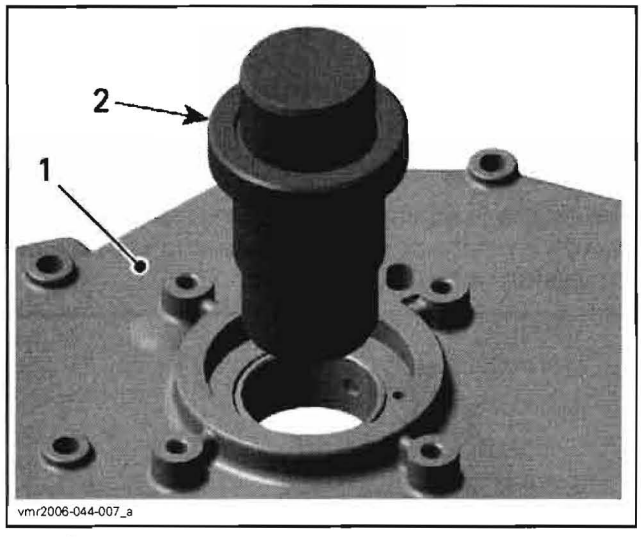

1. *PTO cover*
2. *Plain bearing remover/installer*

Plain Bearing Installation

CAUTION: Unless otherwise instructed, never use hammer to install plain bearings. Use press only.

Install plain bearings with the proper plain bearing remover/installer (P/N 529 036 032) in a cool PTO cover. Do not lubricate plain bearings and/or PTO cover for installation.

Carefully press-in the plain bearings in the same direction as during disassembly, from the outside towards the inside. Support PTO cover with suitable support with straight surface, in order to prevent damage of the sealing surface.

CAUTION: Mark position of oil bore on PTO cover and on plain bearing remover/installer. Align mark on plain bearing remover/installer with mark on PTO cover.

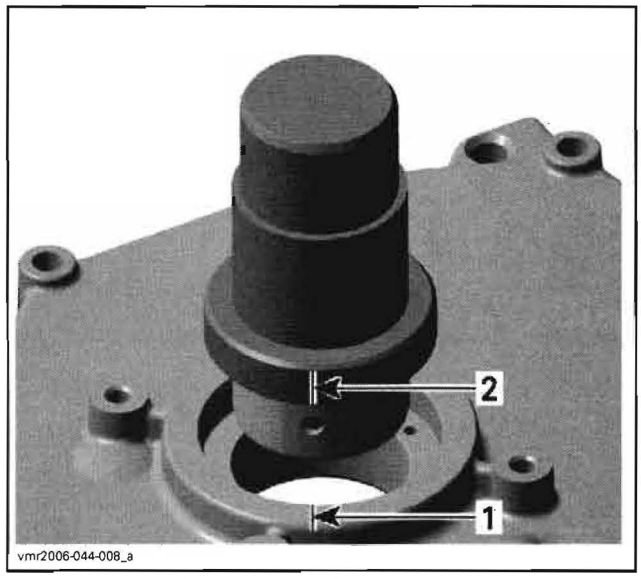

1. *Mark position of oil bore on PTO cover*
2. *Mark position of oil bore on plain bearing remover/installer*

NOTE: Wrong oil bore position will stop oil supply to plain bearings and will damage the engine.

CAUTION: The partition of the plain bearings must be positioned near to oil bore in counterclockwise direction (refer to no. 3 in next illustration).

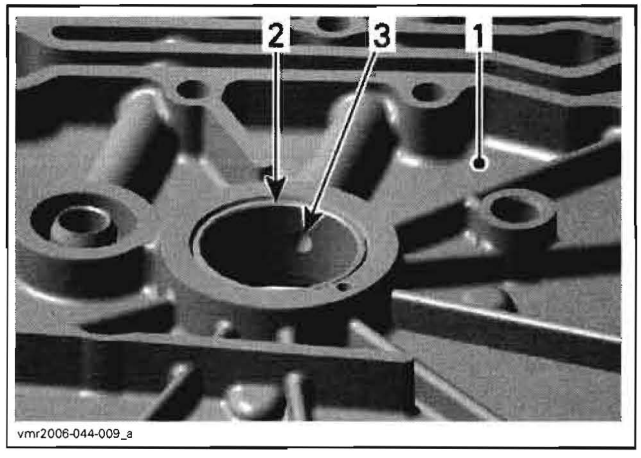

1. *PTO cover (inside)*
2. *Partition*
3. *Oil bore*

PTO Cover Installation

For installation, reverse the removal procedure.

Pay attention to the following details.

NOTE: At installation, replace PTO cover gasket and oil seal.

Tightening sequence for screws on PTO cover is as per following illustration.

www.midwestmanuals.com
Sales@midwestmanuals.com

www.midwestmanuals.com

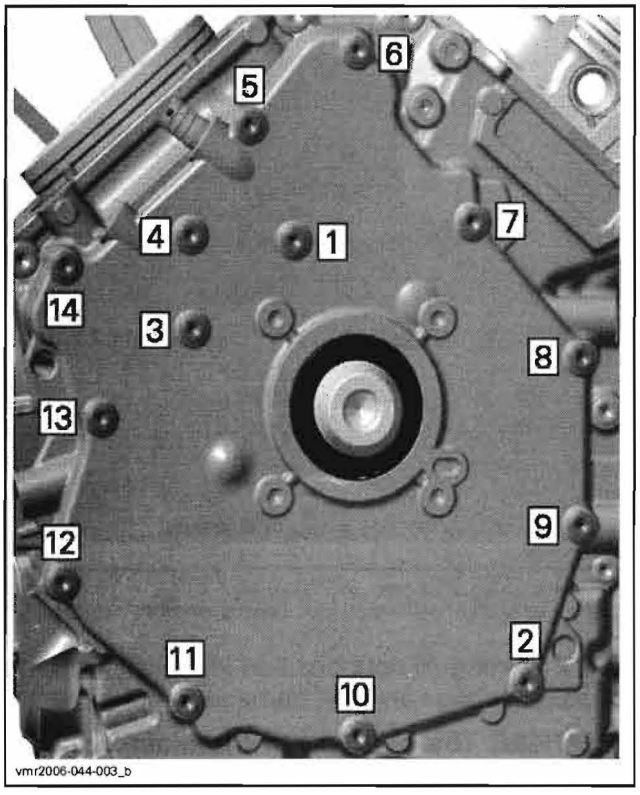

TIGHTENING SEQUENCE

DRIVE GEARS

The drive gears are located on the engine PTO side behind the PTO cover.

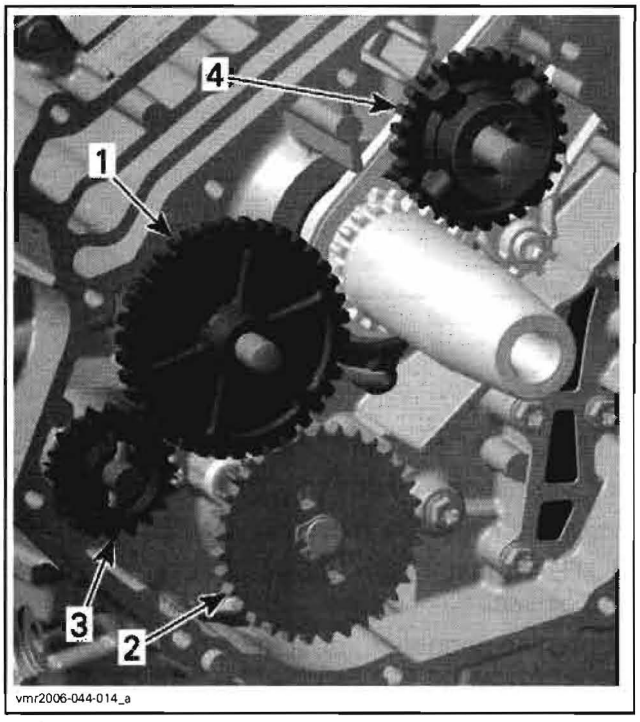

1. *Intermediate gear*
2. *Oil pump gear*
3. *Water pump gear*
4. *Breather gear*

Drive Gear Removal

Remove:
- PTO cover (refer to *PTO COVER*)
- intermediate gear **no. 11**
- oil pump gear **no. 12** (refer to *OIL PUMP* in *LUBRICATION SYSTEM*)
- water pump gear **no. 13**.

To remove water pump gear, pull the shaft assembly a bit out and turn it about one teeth until it stays out.

Now you can push water pump gear down. Remove needle pin **no. 14** and pull water pump gear out.

Remove breather gear **no. 15**.

Drive Gear Inspection

Intermediate Gear/Oil Pump Gear/Water Pump Gear

Inspect gears for wear or other damage. Replace if damaged.

Breather Gear

The engine is equipped with a breather gear which prevents engine oil coming out through the breathing system into the air box.

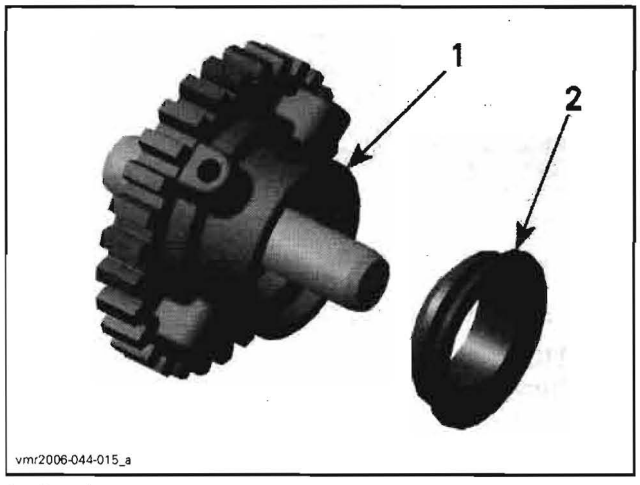

1. *Breather gear*
2. *V-ring*

Inspect gear for wear or other damage.

Check ball bearing for excessive play and smooth operation. Replace breather gear assembly if necessary.

Drive Gear Installation

The installation is essentially the reverse of the removal procedure, but pay attention to the following details.

www.midwestmanuals.com
Sales@midwestmanuals.com

www.midwestmanuals.com

NOTE: At installation replace the V-ring **no. 16** of the breather gear.

Adequately oil the ball bearing of the breather gear.

TIMING CHAIN

The engine is equipped with two timing chains. One of the timing chain is located on engine MAG side behind the magneto cover. The second timing chain is located on engine PTO side behind the PTO cover.

Timing Chain Removal (Magneto Side)

Remove:

- valve cover, chain tensioner and camshaft timing gear (refer to *INTAKE MANIFOLD, CYLINDER HEAD AND CYLINDER*)
- magneto cover and rotor (refer to *MAGNETO SYSTEM*)
- timing chain guide and lower timing chain guide.

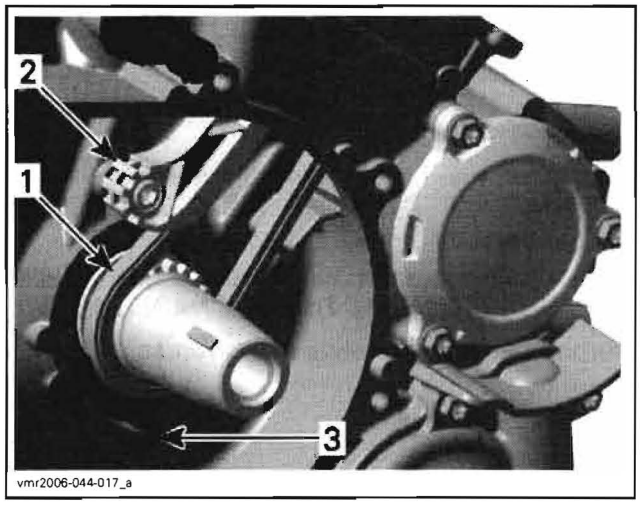

1. *Timing chain*
2. *Timing chain guide*
3. *Lower timing chain guide*

Carefully pull the timing chain sideward and down from the crankcase.

NOTE: Mark the operating direction of the timing chain before removal.

Timing Chain Removal (PTO Side)

Remove:

- valve cover, chain tensioner and camshaft timing gear (refer to *INTAKE MANIFOLD, CYLINDER HEAD AND CYLINDER* section)
- PTO cover (refer to *PTO COVER*)
- intermediate gear and breather gear (refer to *DRIVE GEARS*)
- timing chain guide and lower timing chain guide (see illustration above).

Carefully pull the timing chain sideward and down from the crankcase.

NOTE: Mark the operating direction of the timing chain before removal.

Timing Chain Inspection

Inspection is the same for both timing chains.

NOTE: Check timing chain on camshaft timing gear for excessive radial play.

Check chain condition for wear and teeth condition.

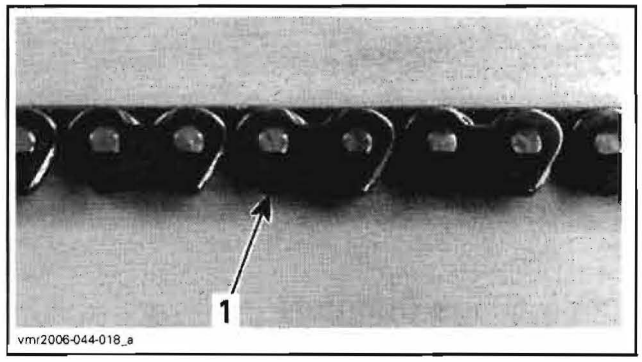

1. *Timing chain*

If chain is excessively worn or damaged, replace it as a set (camshaft timing gear and timing chain).

Timing Chain Installation

Installation is the same for both timing chains.

The installation is essentially the reverse of the removal procedure, but pay attention to the following details.

NOTE: Ensure to perform proper valve timing. Lock crankshaft (see *CRANKSHAFT*) and camshaft at TDC ignition (refer to *INTAKE MANIFOLD, CYLINDER HEAD AND CYLINDER* section).

Install timing chain with camshaft timing gear then, adjust chain tension (refer to *INTAKE MANIFOLD, CYLINDER HEAD AND CYLINDER* section).

CAUTION: Improper valve timing will damage engine components.

www.midwestmanuals.com
Sales@midwestmanuals.com

www.midwestmanuals.com

TIMING CHAIN GUIDE

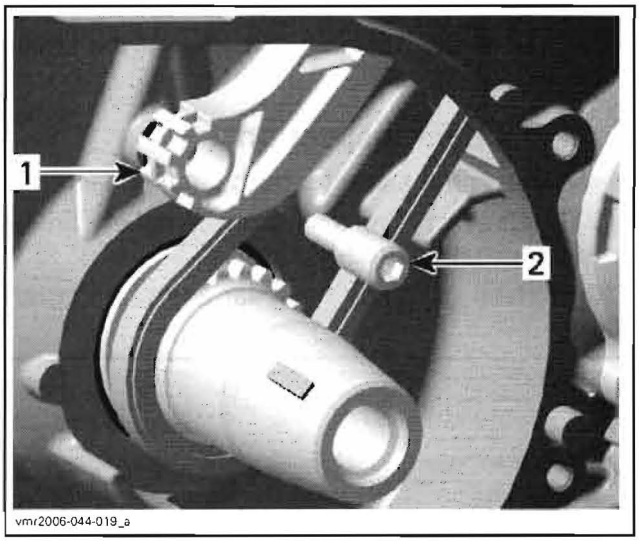

1. *Timing chain guide*
2. *Bearing screw*

Chain Guide Removal

Refer to *TIMING CHAIN* above.

Chain Guide Inspection

Check timing chain guide for wear, cracks or other damage. Replace if necessary.

Chain Guide Installation

The installation is the reverse of the removal procedure.

CRANKCASE

NOTE: Before disassembly, drain engine oil and engine coolant.

Crankcase Disassembly

NOTE: Before splitting the crankcase, measure crankshaft axial play. Refer to *CRANKSHAFT*.

Remove:

- drive shaft (refer to *ENGINE DRIVE SHAFT*)
- PTO cover (refer to *PTO COVER*)
- drive gears (refer to *DRIVE GEARS*)

NOTE: Oil pump removal from crankcase is not necessary, but recommended to see condition of oil pump (refer to *LUBRICATION SYSTEM* section).

- electric starter

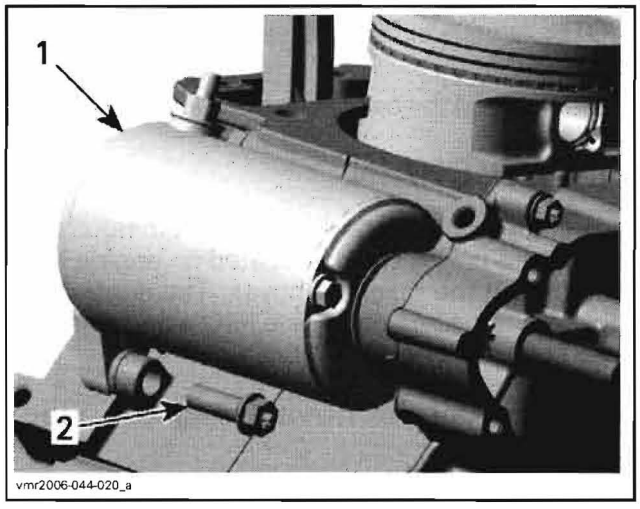

1. *Electric starter*
2. *Screw*

- magneto cover and rotor (refer to *MAGNETO SYSTEM* section)
- electric starter drive gears (refer to *MAGNETO SYSTEM* section)
- water pump housing (refer to *COOLING SYSTEM* section)
- oil filter (refer to *LUBRICATION SYSTEM* section)
- cylinder head and cylinder (refer to *INTAKE MANIFOLD, CYLINDER HEAD AND CYLINDER* section)
- timing chains and timing chain guides (refer to *TIMING CHAIN* and *TIMING CHAIN GUIDE*).

Remove retaining screws of crankcase.

www.midwestmanuals.com
Sales@midwestmanuals.com

www.midwestmanuals.com

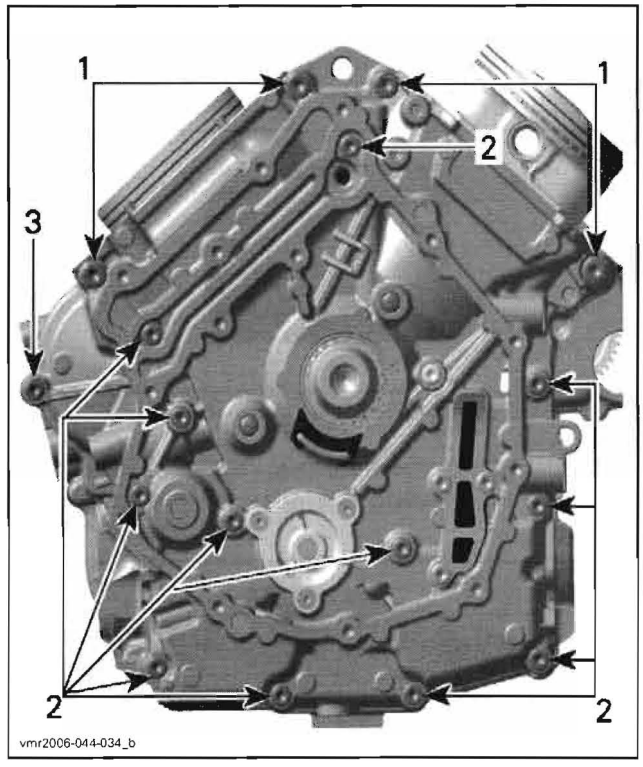

1. *Four screws M8 x 65*
2. *12 screws M6 x 75*
3. *One screw M6 x 35*

Carefully split crankcase halves by using a screwdriver and a soft hammer.

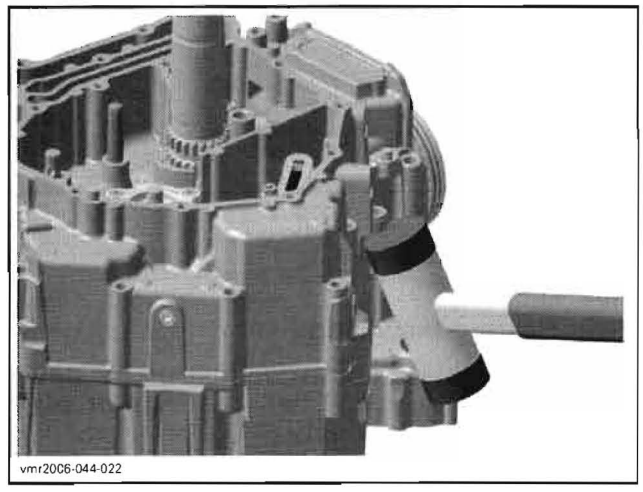

NOTE: During disassembly, do not damage the sealing surfaces of the crankcase halves.

Pull crankshaft out of crankcase.

Remove the water pump intermediate shaft and the water pump gear.

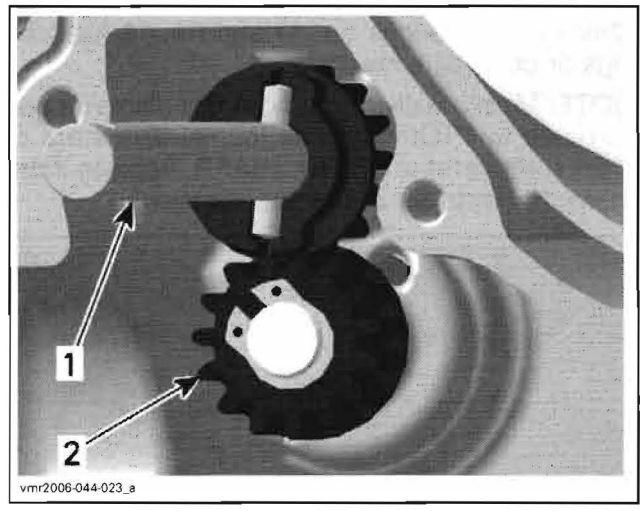

1. *Water pump intermediate shaft*
2. *Water pump gear*

Remove engine oil strainer.

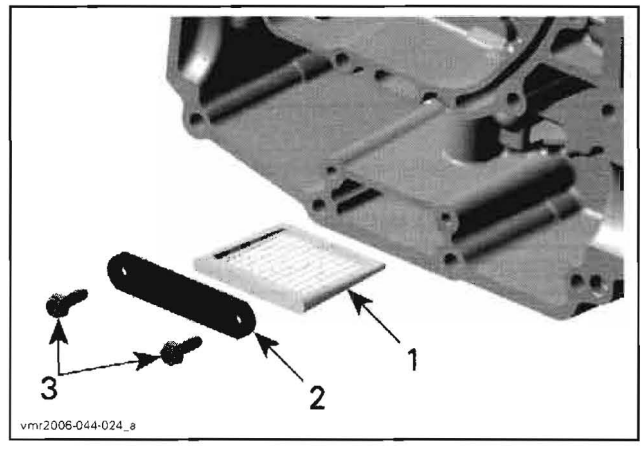

1. *Engine oil strainer*
2. *Retaining plate*
3. *Screws*

Crankcase Cleaning

⚠ WARNING

Use safety goggles to avoid eye injuries.

Clean crankcase using a part cleaner.

Dry crankcase using compressed air.

Blow the oil supply lines.

Oil Strainer

Clean the engine oil strainer (same procedure as for the crankcase).

Crankcase Inspection

Check crankcase halves for cracks or other damage. Replace if damaged.

www.midwestmanuals.com
Sales@midwestmanuals.com

www.midwestmanuals.com

Check plain bearings **no. 17** and **no. 18** for scorings or other damages.

NOTE: Measure plain bearing inside diameter and compare to PTO/MAG side journal diameters of crankshaft (refer to *CRANKSHAFT*). Replace if the measurements are out of specification.

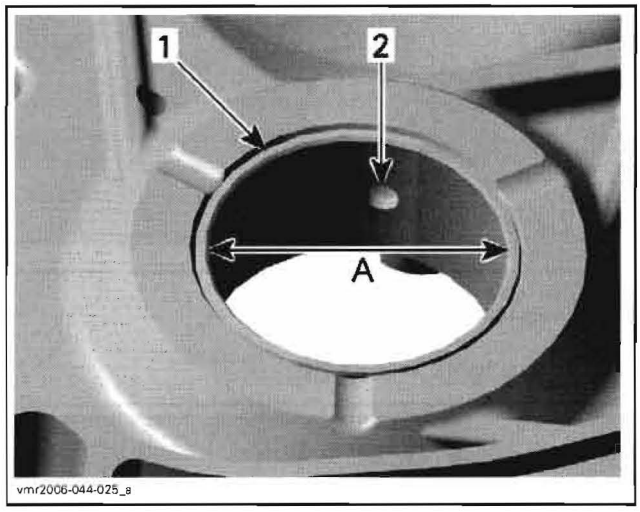

1. Plain bearing
2. Oil bore
A. Measure plain bearing inside diameter

PLAIN BEARING INSIDE DIAMETER (PTO/MAG)	
SERVICE LIMIT	42.100 mm (1.6575 in)

Plain Bearing Replacement

Plain Bearing Removal

CAUTION: Always support crankcase halves properly when ball bearings or plain bearings are removed. Damages to crankcase halves may occur if this procedure is not performed correctly.

NOTE: Always use a press for removal of plain bearings.

Remove plain bearings **no. 17** and **no. 18** with the proper plain bearing remover/installer (P/N 529 035 917).



PLAIN BEARING REMOVER/INSTALLER (P/N 529 035 917)

Carefully push the plain bearings out, from the crankcase half inside towards the outside.

NOTE: Place the proper crankcase support sleeve (P/N 529 036 031) under crankcase halves before removing plain bearings.



CRANKCASE SUPPORT SLEEVE (P/N 529 036 031)

NOTE: During disassembly, make sure not to damage the sealing surfaces of the crankcase halves.

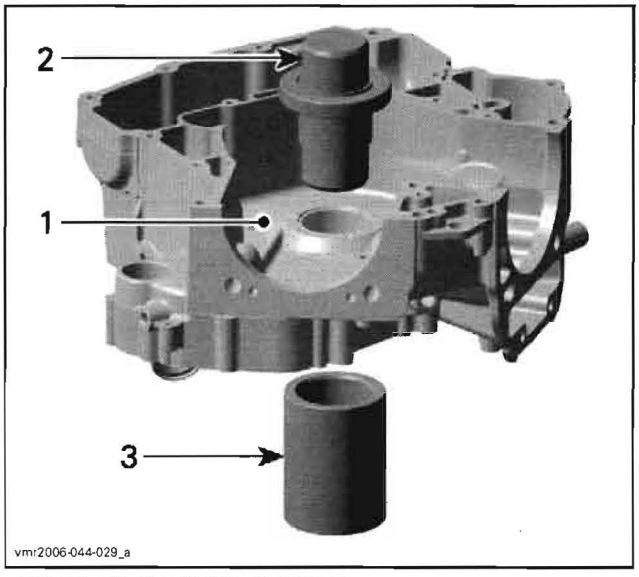

PUSH PLAIN BEARINGS OUTSIDE
1. Crankcase half
2. Plain bearing remover/installer
3. Crankcase support sleeve (P/N 529 036 031)

Plain Bearing Installation

CAUTION: Unless otherwise instructed, never use hammer to install ball bearings or plain bearings. Use press only.

Install plain bearings with the proper plain bearing remover/installer (P/N 529 035 917) in a cool crankcase. Do not lubricate plain bearings and/or crankcase for installation.

NOTE: Place the proper crankcase support sleeve under crankcase halves before installing the plain bearings (refer to *BEARING REMOVAL PROCEDURE*).

Carefully press-in the plain bearings in the same direction as during disassembly, from the crankcase inside towards the outside.

www.midwestmanuals.com
Sales@midwestmanuals.com

www.midwestmanuals.com

During reassembly, make sure not to damage the sealing surfaces of the crankcase halves.

CAUTION: Mark position of oil bore on crankcase half and on plain bearing remover/installer. Align mark on plain bearing remover/installer with mark on crankcase half.

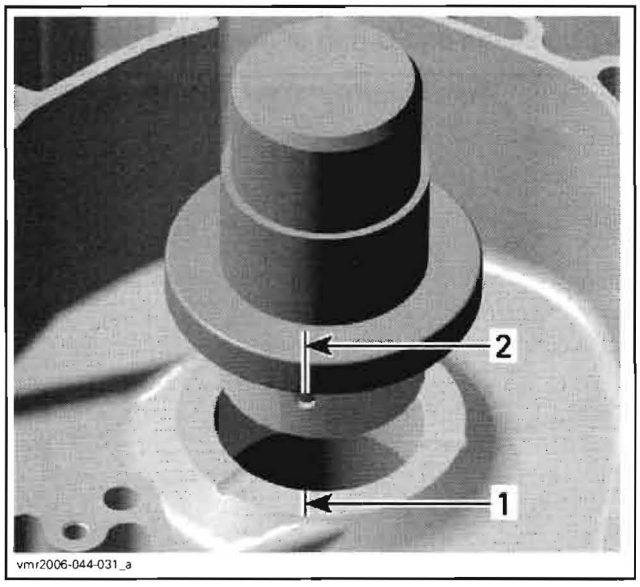

1. *Oil bore position marked on crankcase*
2. *Oil bore position marked on plain bearing remover/installer*

NOTE: Wrong oil bore position will stop oil supply to plain bearings and will cause engine damage.

CAUTION: The partition of the plain bearings in crankcase half MAG side must be positioned near to oil bore in clockwise direction (refer to no. 3 in next illustration).

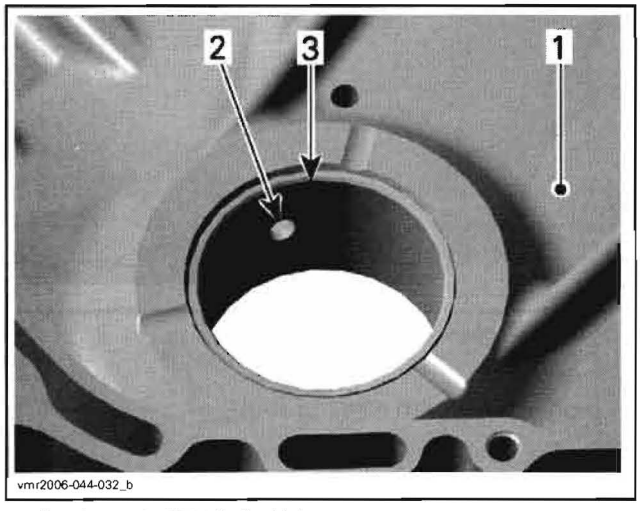

1. *Crankcase half* MAG *(inside)*
2. *Oil bore*
3. *Partition*

CAUTION: The partition of the plain bearings in crankcase half PTO side must be positioned near to oil bore in counterclockwise direction (refer to no. 3 in next illustration).

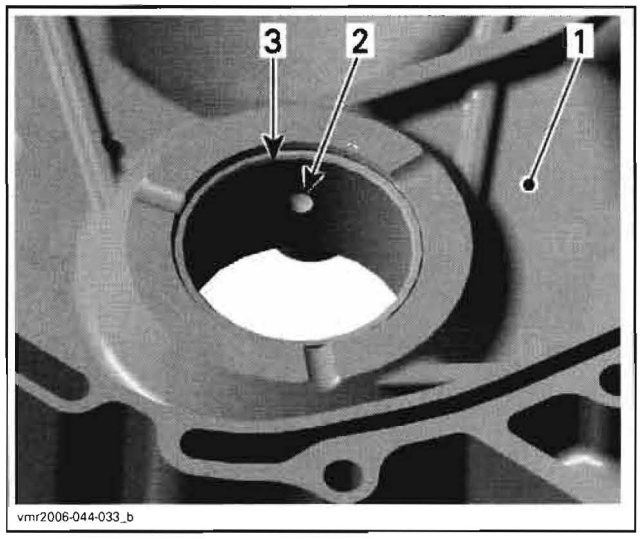

1. *Crankcase half* PTO *(inside)*
2. *Oil bore*
3. *Partition*

NOTE: Use an O-ring (Ø 42 x 1 to 1.5 mm (.04 to .06 in) thickness) to hold plain bearings in place during installation. The O-ring will disappear in the groove of the plain bearing remover/installer.

Crankcase Assembly

The assembly of crankcase is essentially the reverse of removal procedure. However, pay attention to the following details.

Clean oil passages and make sure they are not clogged.

Clean all metal components in a solvent.

Install a new crankcase gasket.

Oil the plain bearings before mounting the crankshaft.

CAUTION: Correctly reinstall crankshaft (refer to *CRANKSHAFT*).

Properly reinstall engine oil strainer and screws.

Reinstall water pump shaft shafts/gears (refer to *COOLING SYSTEM* section).

Tightening sequence for screws on crankcase is as per following illustration.

www.midwestmanuals.com
Sales@midwestmanuals.com

www.midwestmanuals.com

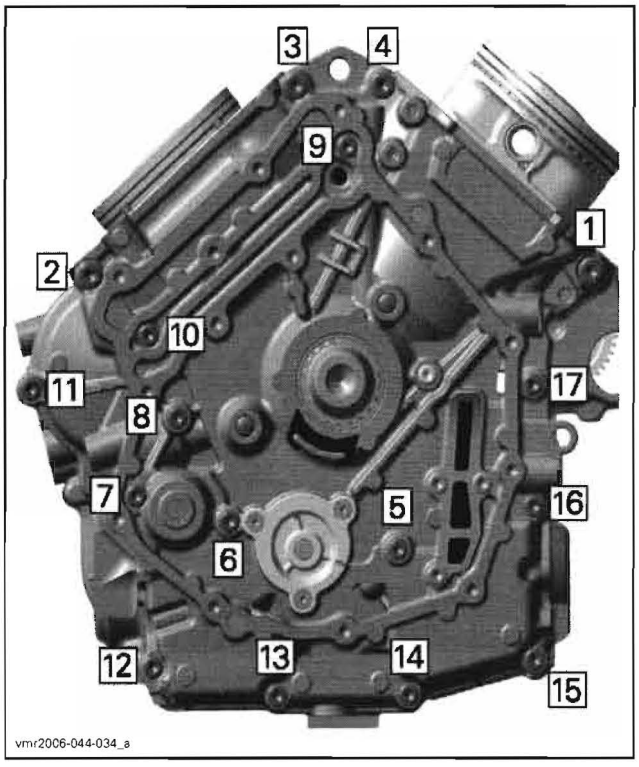

TIGHTENING SEQUENCE

CRANKSHAFT

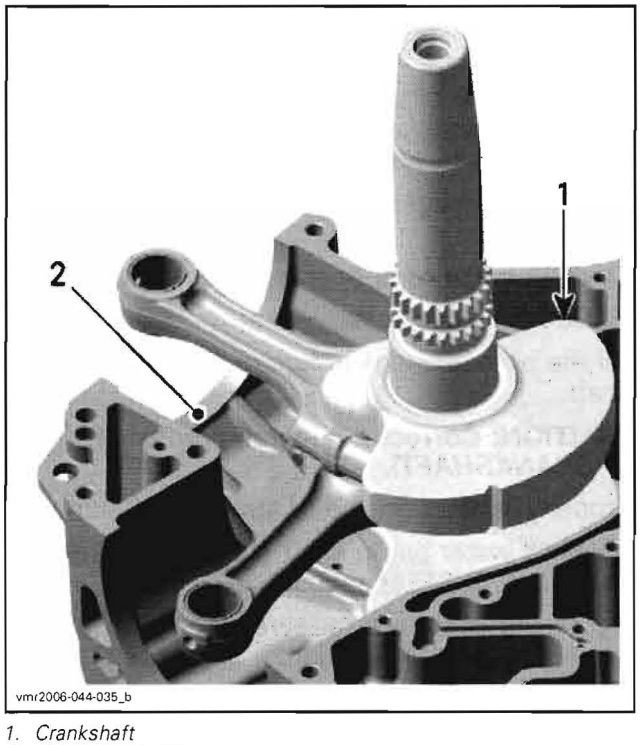

1. *Crankshaft*
2. *Crankcase MAG*

Crankshaft Locking Procedure

NOTE: When crankshaft is locked, the rear piston (cylinder 2, rear) is at TDC ignition. Crankshaft can not be locked at cylinder 1 (front) TDC.

Remove:

- spark plug cable and spark plug of both cylinders
- valve covers of both cylinders
- plug screw and O-ring of magneto cover

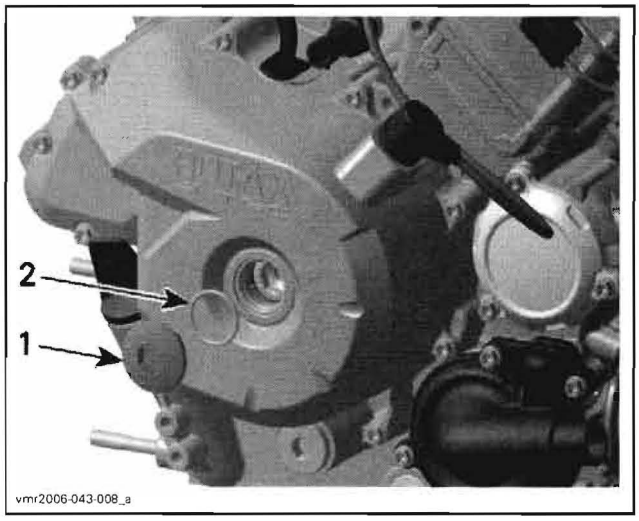

1. *Plug screw*
2. *O-ring*

- crankshaft position sensor

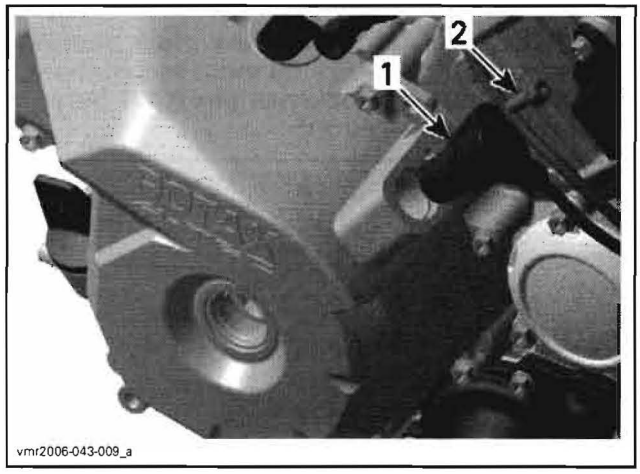

1. *Crankshaft position sensor*
2. *Screw*

- plug screw with sealing ring.

www.midwestmanuals.com
Sales@midwestmanuals.com

www.midwestmanuals.com

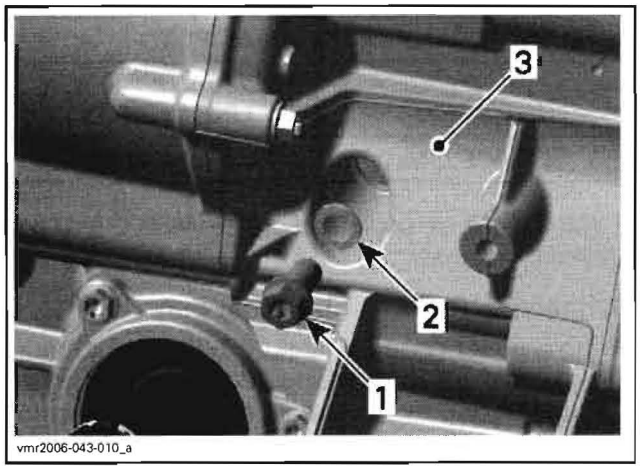

1. *Plug screw*
2. *Sealing ring*
3. *Crankcase PTO side, front side*

Use a 14 mm Allen key to turn crankshaft until piston 2, rear is at TDC ignition.

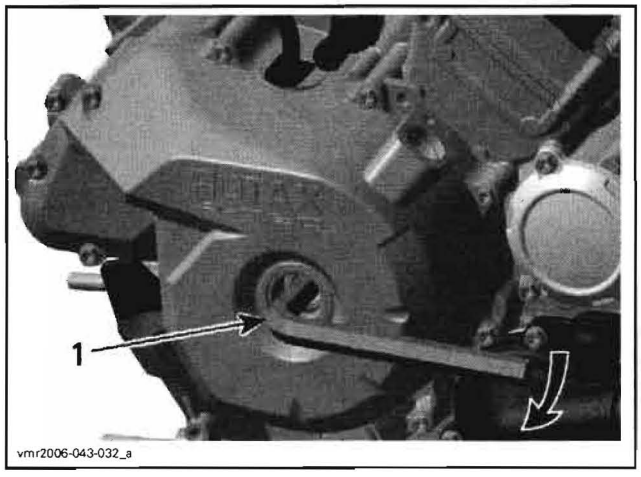

1. *Allen key 14 mm*

When rear piston is at TDC ignition, marks on magneto flywheel "2" and on the magneto cover are aligned.

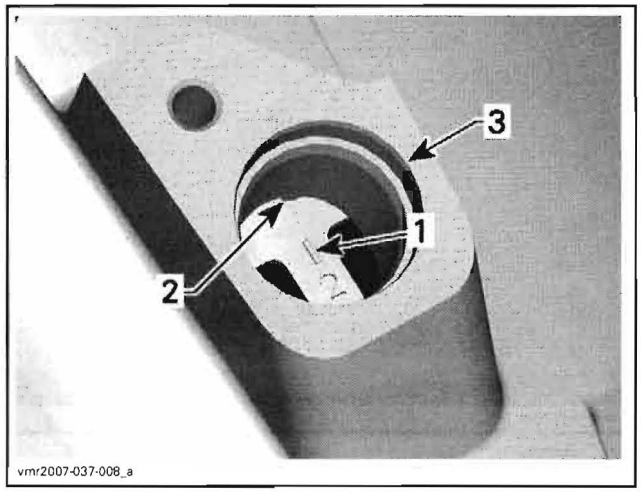

1. *Mark "2" on magneto flywheel*
2. *Notch on magneto cover*
3. *Crankshaft position sensor location*

Use a screwdriver to check if the groove in the crankshaft is aligned with the hole.

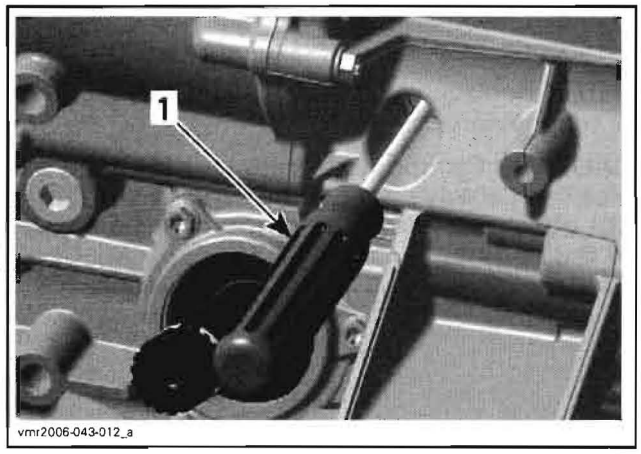

1. *Screwdriver*

Lock crankshaft with crankshaft locking bolt (P/N 529 035 617).

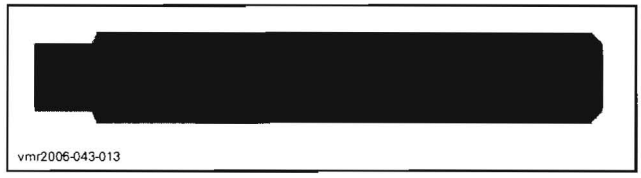

www.midwestmanuals.com
Sales@midwestmanuals.com

www.midwestmanuals.com

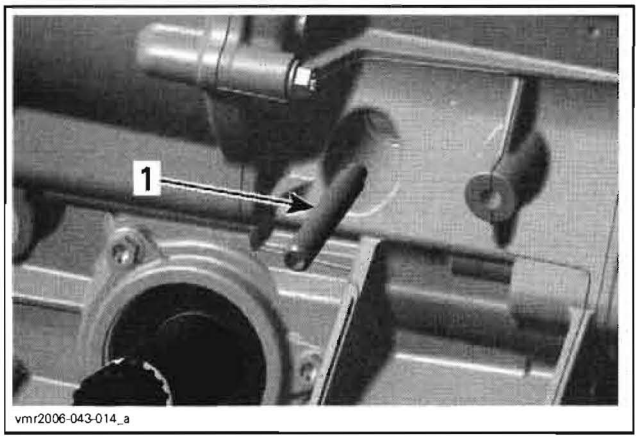

1. Crankshaft locking bolt

Crankshaft Removal

Refer to *CRANKCASE*.

Crankshaft Inspection

NOTE: Check each bearing journal of crankshaft for scoring, scuffing, cracks or other signs of wear.

NOTE: Replace crankshaft if the gears are worn or otherwise damaged.

CAUTION: Components with less than the service limit always have to be replaced. If this is not observed, severe damage may be caused to the engine.

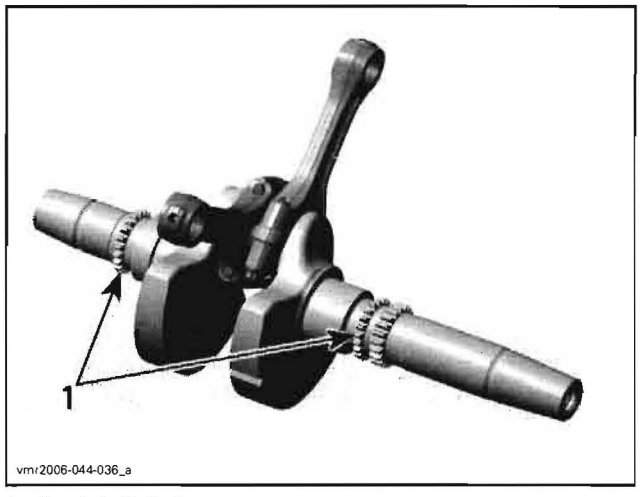

1. Crankshaft timing gears

Crankshaft Axial Play

NOTE: Axial play needs to be measured before splitting the crankcase.

Measure play on PTO end, using a dial indicator.

CRANKSHAFT AXIAL PLAY	
NEW	0.200 to 0.500 mm (.008 to .020 in)
SERVICE LIMIT	0.6 mm (.024 in)

If play is out of specification, replace crankcase and/or crankshaft.

Connecting Rod Big End Axial Play

Using a feeler gauge, measure distance between butting face of connecting rods and crankshaft counterweight. If the distance exceeds specified tolerance, replace the crankshaft.

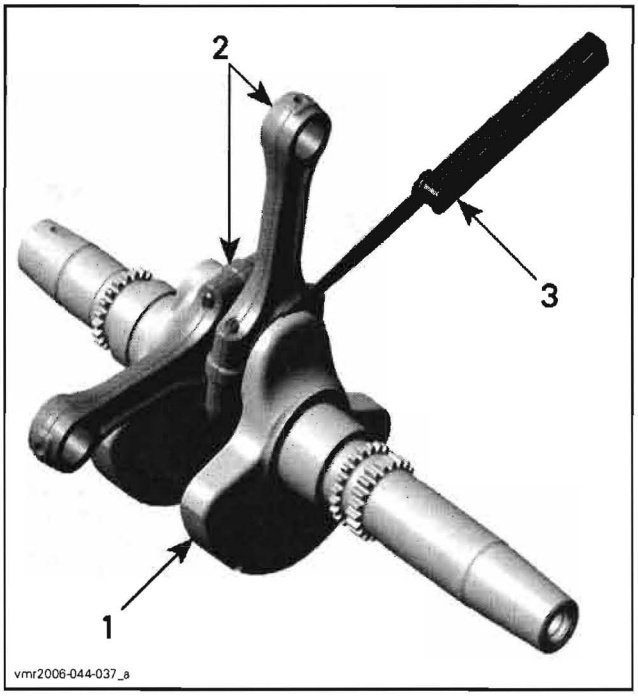

1. Crankshaft
2. Connecting rods
3. Feeler gauge

CONNECTING ROD BIG END AXIAL PLAY	
NEW	0.200 to 0.500 mm (.008 to .020 in)
SERVICE LIMIT	0.6 mm (.024 in)

Connecting Rod/Piston Pin Clearance

Refer to *INTAKE MANIFOLD, CYLINDER HEAD AND CYLINDER* section.

Connecting Rod Big End Radial Play

NOTE: Prior to remove connecting rod from the crankshaft, mark big end halves together to ensure a correct reinstallation (cracked surface fits in only one position).

Remove connecting rods from crankshaft.

www.midwestmanuals.com
Sales@midwestmanuals.com

www.midwestmanuals.com

CAUTION: Always replace connecting rod screws no. **19** if removing the connecting rod. It is recommended to replace plain bearings no. **20**, in case of installing the connecting rod.

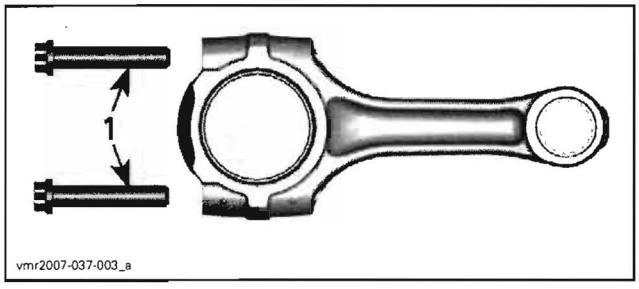

1. Connecting rod screws

Measure crankpin. Compare to inside diameter of connecting rod big end.

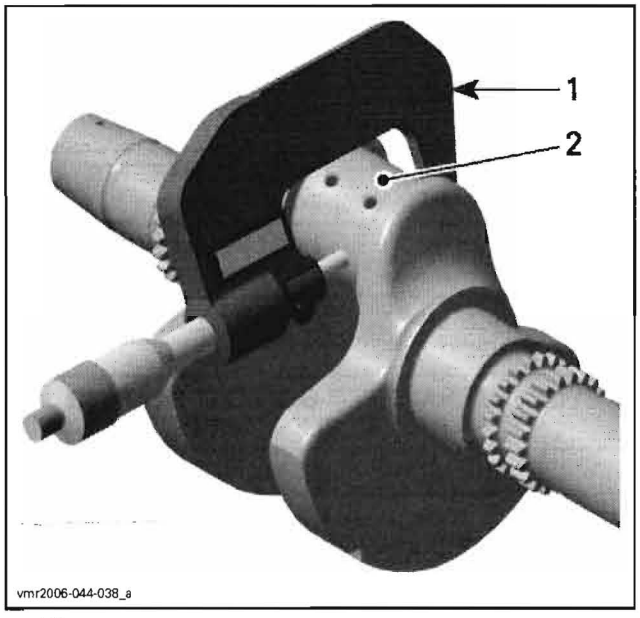

1. Micrometer
2. Crankpin area for plain bearing

To measure the connecting rod big end diameter, use the OLD screws **no. 19**.

Install the OLD plain bearings **no. 20** as they were mounted initially.

Do the torque procedure as described further.

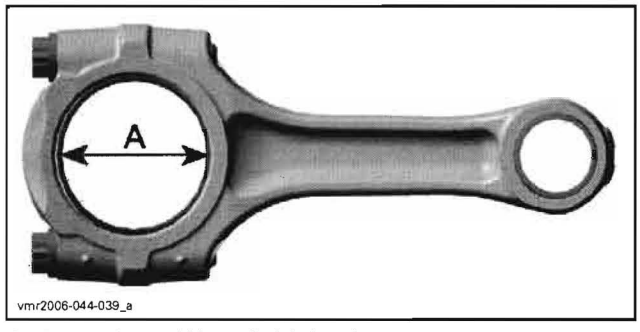

A. Connecting rod big end plain bearing

OUTLANDER 500	
CRANKSHAFT PIN DIAMETER	
NEW	35.064 to 35.080 mm (1.3805 to 1.3811 in)
SERVICE LIMIT	35.050 mm (1.3800 in)
CONNECTING ROD BIG END DIAMETER	
SERVICE LIMIT	35.150 mm (1.3839 in)
CONNECTING ROD BIG END RADIAL PLAY	
SERVICE LIMIT	0.09 mm (.0035 in)

OUTLANDER 650/800	
CRANKSHAFT PIN DIAMETER	
NEW	40.009 to 40.025 mm (1.5752 to 1.5758 in)
SERVICE LIMIT	39.990 mm (1.5744 in)
CONNECTING ROD BIG END DIAMETER	
SERVICE LIMIT	40.100 mm (1.5787 in)
CONNECTING ROD BIG END RADIAL CLEARANCE	
SERVICE LIMIT	0.09 mm (.0035 in)

Crankshaft Radial Play MAG/PTO Side

Measure crankshaft on MAG/PTO side. Compare to inside diameter of MAG/PTO plain bearing (refer to *CRANKCASE*).

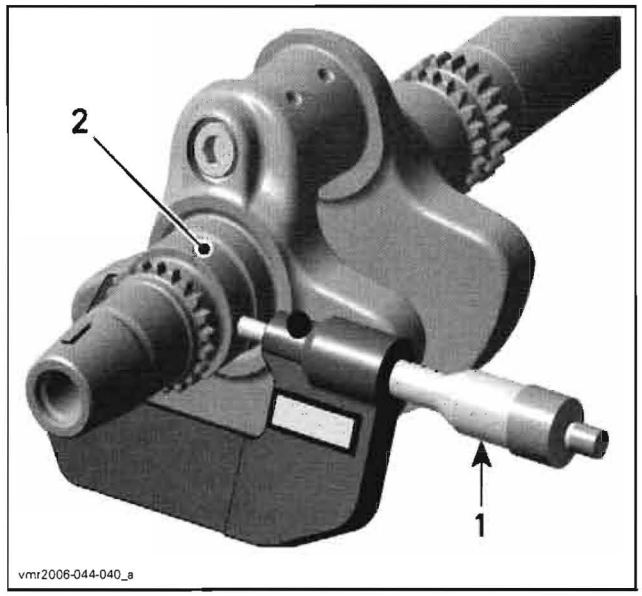

1. Micrometer
2. Crankshaft area for MAG plain bearing

www.midwestmanuals.com
Sales@midwestmanuals.com

www.midwestmanuals.com

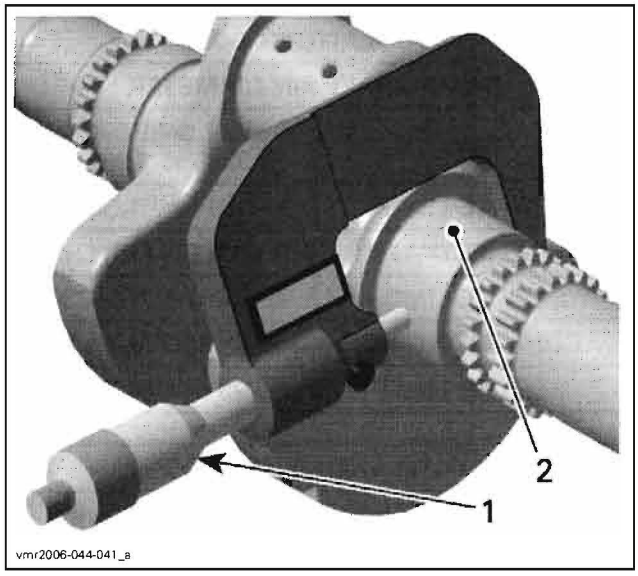

1. Micrometer
2. Crankshaft area for PTO plain bearing

CRANKSHAFT MAG/PTO SIDE DIAMETER	
NEW	42.024 to 42.040 mm (1.6545 to 1.6551 in)
SERVICE LIMIT	42.000 mm (1.6535 in)

CRANKSHAFT MAG/PTO SIDE RADIAL CLEARANCE	
SERVICE LIMIT	0.07 mm (.0031 in)

Crankshaft Radial Play (PTO Side Support Bearing)

Measure crankshaft journal of PTO support bearing. Compare to inside diameter of PTO support bearing in PTO cover (refer to *PTO COVER*).

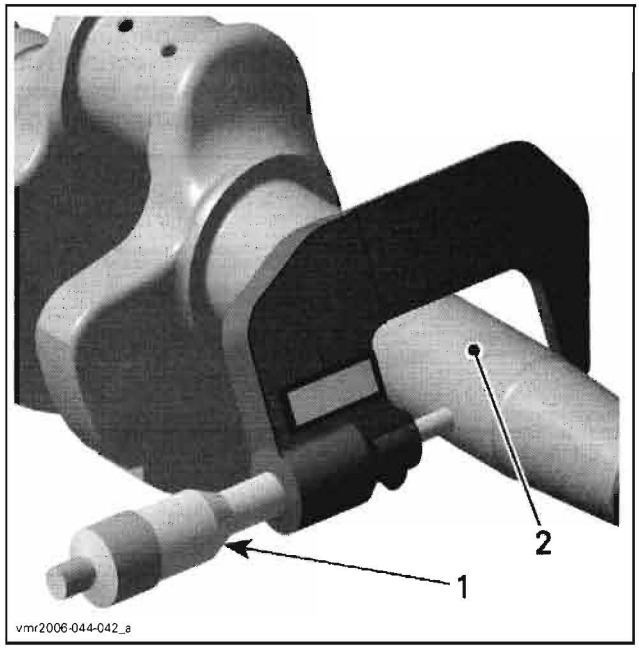

1. Micrometer
2. Crankshaft journal (PTO support bearing)

CRANKSHAFT JOURNAL DIAMETER (PTO support bearing)	
NEW	34.024 to 34.040 mm (1.3395 to 1.3402 in)
SERVICE LIMIT	34.010 mm (1.3390 in)

CRANKSHAFT PTO SUPPORT BEARING RADIAL CLEARANCE	
SERVICE LIMIT	0.10 mm (.0039 in)

Crankshaft Assembly

For assembly, reverse the disassembly procedure. Pay attention to following details.

NOTE: Use NEW plain bearings **no. 20**, when connecting rod big end diameter is out of specification.

Put plain bearings correctly in place and clean the split surface on both sides (cracked area) carefully with compressed air.

www.midwestmanuals.com
Sales@midwestmanuals.com

www.midwestmanuals.com

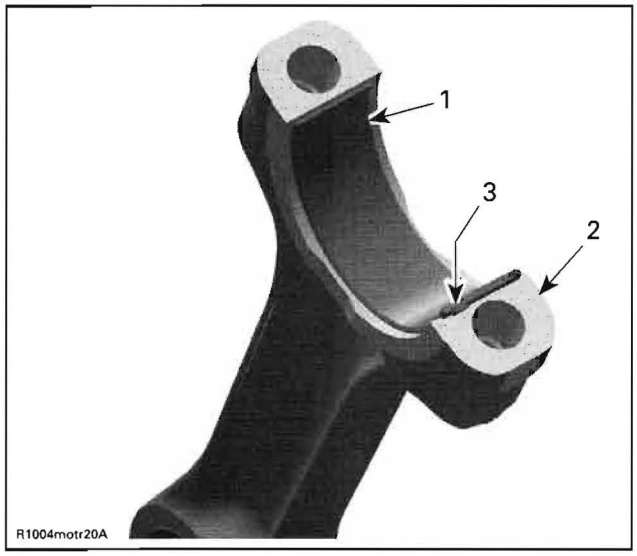

1. *Half plain bearing of connecting rod big end*
2. *Split surface of the connecting rod*
3. *Nose of plain bearing in line with connecting rod groove*

NOTE: Oil the plain bearing surface of the connecting rod and crank pin before installation.

Torque **NEW** connecting rod screws **no. 19** as per following procedure:

Outlander 500:

- First, install screws with half of the recommended torque. Do not apply any thread locker.
- Secondly, torque screws to 12 N•m (106 lbf•**in**).
- Finish tightening the screws with an additional 70° turn using an angle torque wrench.

Outlander 650 and 800:

- First, install screws with half of the recommended torque. Do not apply any thread locker.
- Secondly, torque connecting rod screws to 20 N•m (15 lbf•ft).
- Finish tightening the screws with an additional 60° turn using an angle torque wrench.

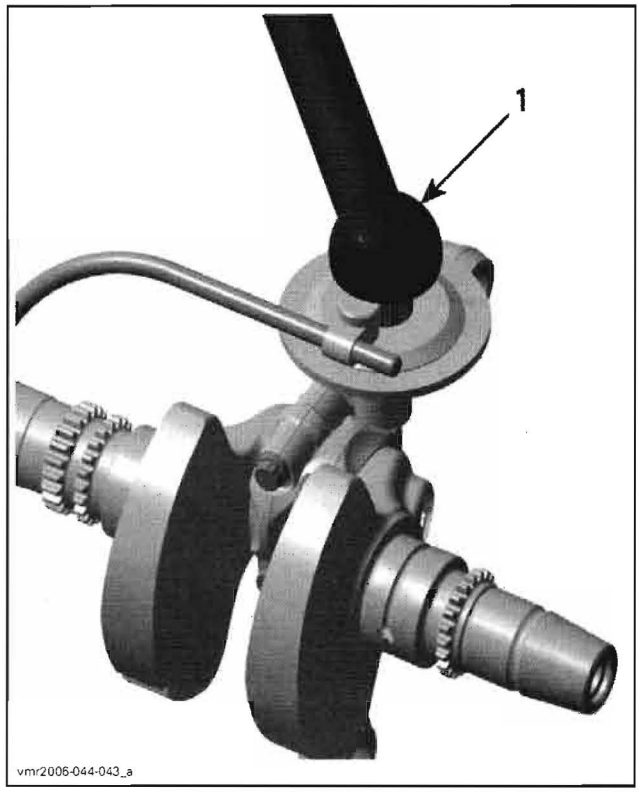

1. *Angle torque wrench*

CAUTION: Failure to strictly follow this procedure may cause screw to loosen and lead to engine damage. The plain bearing tapered end must be against the counterweight. Besides, as the "crankpin" screw has been stretched from the previous installation, it is very important to use a new screw at assembly.

NOTE: The running direction of the big end bearings and of the piston pins must not change.

Crankshaft Installation

For installation of crankshaft in crankcase reverse the removal procedure. Pay attention to the following details.

Do not mix up the connecting rods of cylinders 1 and 2 during installation.

CAUTION: Observe the correct installation position when fitting the crankshaft with the connecting rods. The connecting rod MAG side has to face to cylinder 1.

www.midwestmanuals.com
Sales@midwestmanuals.com

www.midwestmanuals.com

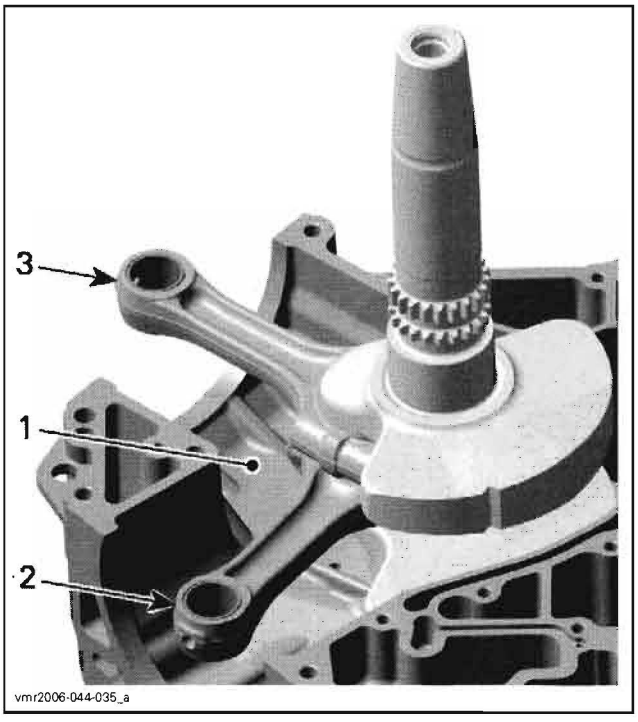

1. *Crankcase half MAG side*
2. *Connecting rod cylinder 1*
3. *Connecting rod cylinder 2*

CAUTION: Install CRANKSHAFT LOCKING BOLT to put crankshaft in TDC position before installing the camshaft and rocker arms (refer to *CRANKSHAFT LOCKING PROCEDURE*.

www.midwestmanuals.com
Sales@midwestmanuals.com

www.midwestmanuals.com

GEARBOX AND 4X4 COUPLING UNIT

SERVICE TOOLS

Description	Part Number	Page
installer handle	420 877 650	142, 160
oil seal installer	529 035 758	142
main shaft needle bearing installer	529 035 762	160
bevel gear needle bearing installer	529 035 763	160
Fluke 111 multimeter	529 035 868	142
oil seal installer	529 036 028	141
backlash measurement tool	529 036 030	144

SERVICE PRODUCTS

Description	Part Number	Page
Super Lube grease	293 550 030	143, 149
Loctite 5910	293 800 081	139–140, 148–149, 164
Loctite chisel (gasket remover)	413 708 500	148, 156, 164
XP-S chaincase oil	413 801 900	139
XP-S synthetic chaincase oil	413 803 300	139



sales@midwestmanuals.com
www.midwestmanuals.com

www.midwestmanuals.com
Sales@midwestmanuals.com

www.midwestmanuals.com

GEARBOX COMPONENTS AND 4X4 COUPLING MECHANISM

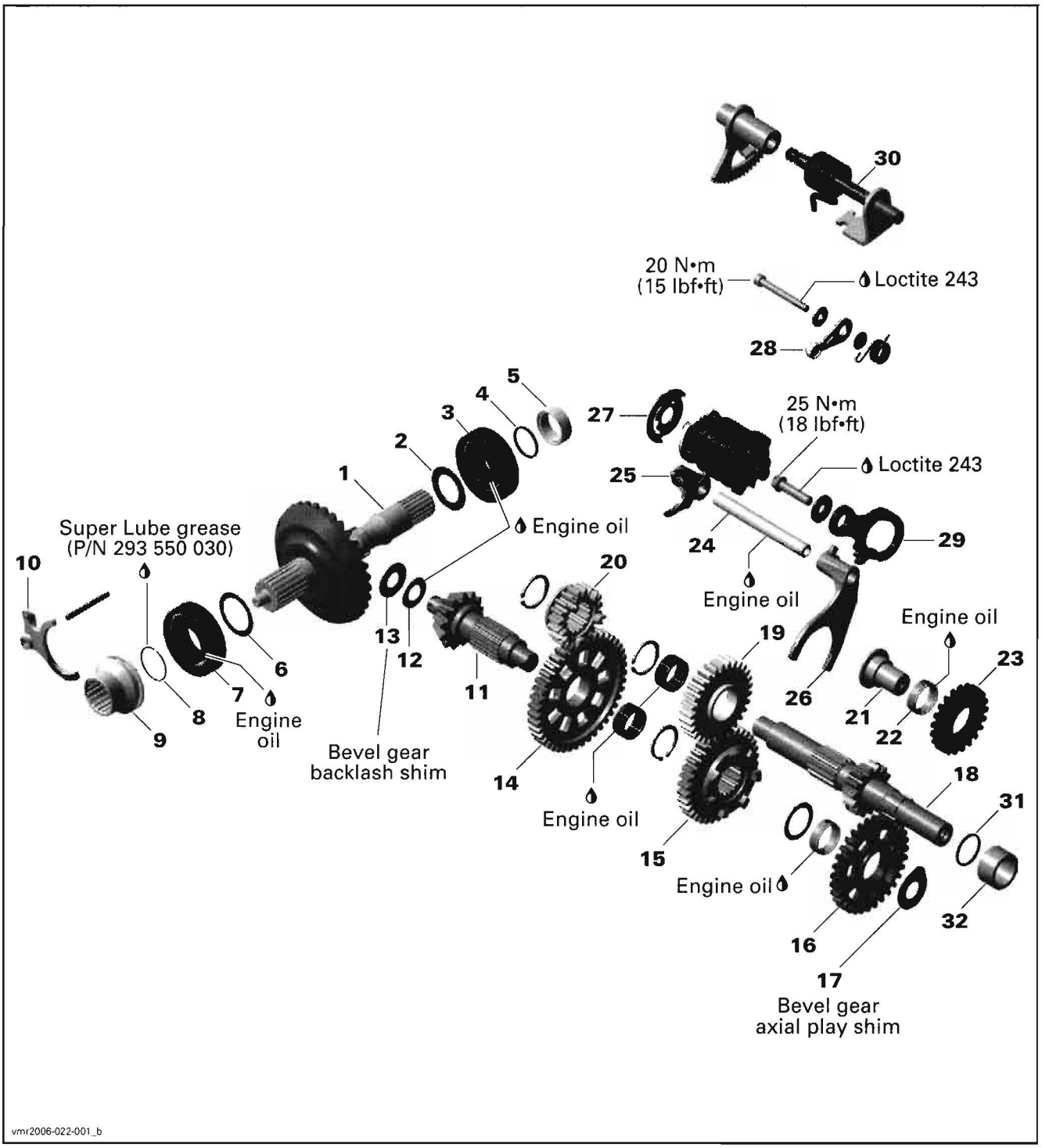

www.midwestmanuals.com
Sales@midwestmanuals.com

www.midwestmanuals.com

GEARBOX HOUSING AND 4X4 ACTUATOR UNIT

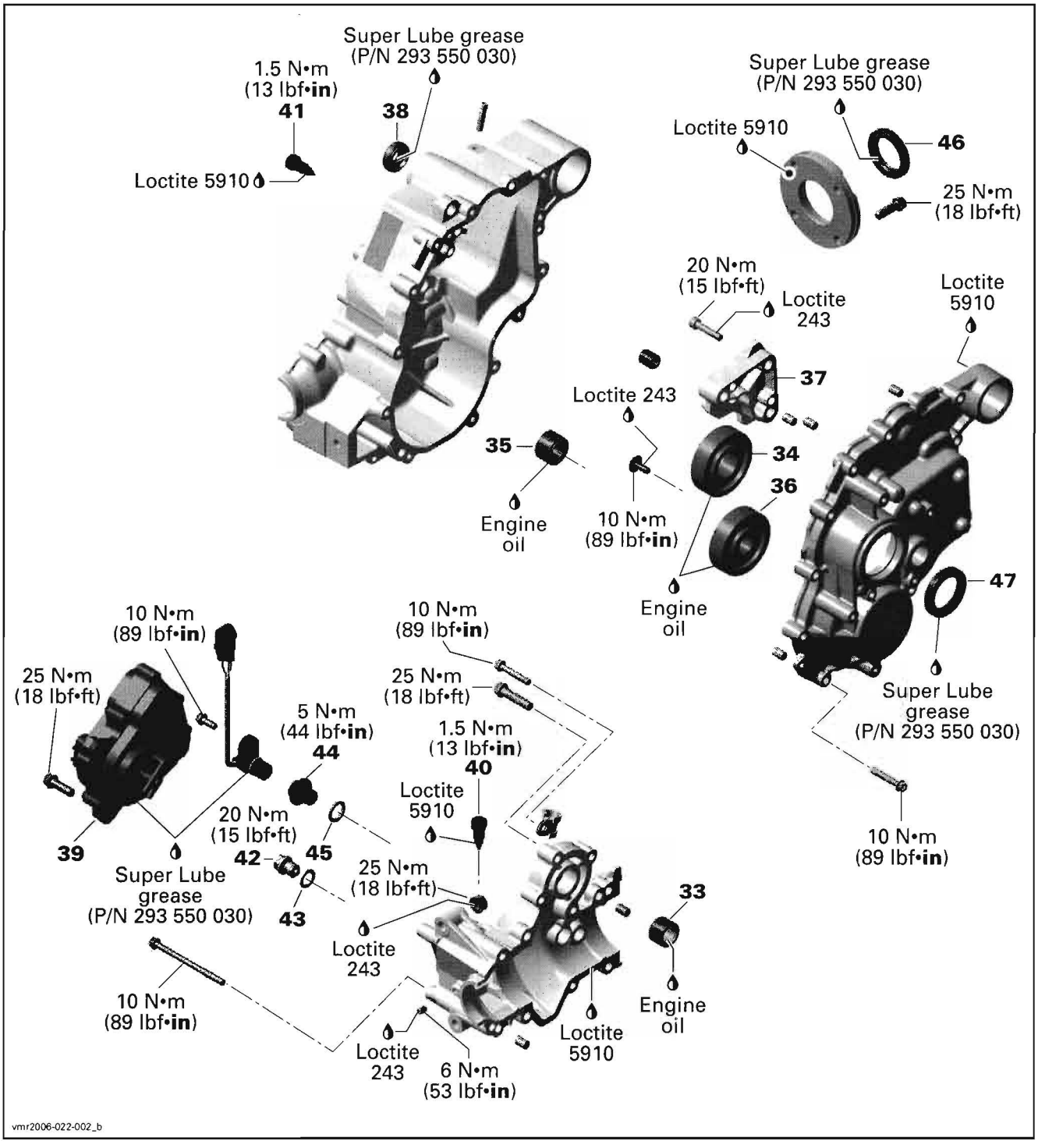

www.midwestmanuals.com
Sales@midwestmanuals.com

www.midwestmanuals.com

GENERAL

During assembly/installation, use the torque values and service products as in the exploded views.

Clean threads before applying a threadlocker. Refer to *SELF-LOCKING FASTENERS* and *LOCTITE APPLICATION* at the beginning of this manual for complete procedure.

⚠ WARNING

Torque wrench tightening specifications must strictly be adhered to.
Locking devices (e.g.: locking tabs, elastic stop nuts, self-locking fasteners, etc.) must be installed or replaced with new ones where specified. If the efficiency of a locking device is impaired, it must be renewed.

Always drain the gearbox before working on it.

To remove gearbox, the engine removal is necessary. Refer to *ENGINE REMOVAL AND INSTALLATION*.

Remove drive and driven pulley and CVT air guide, refer to *CVT*.

Overview

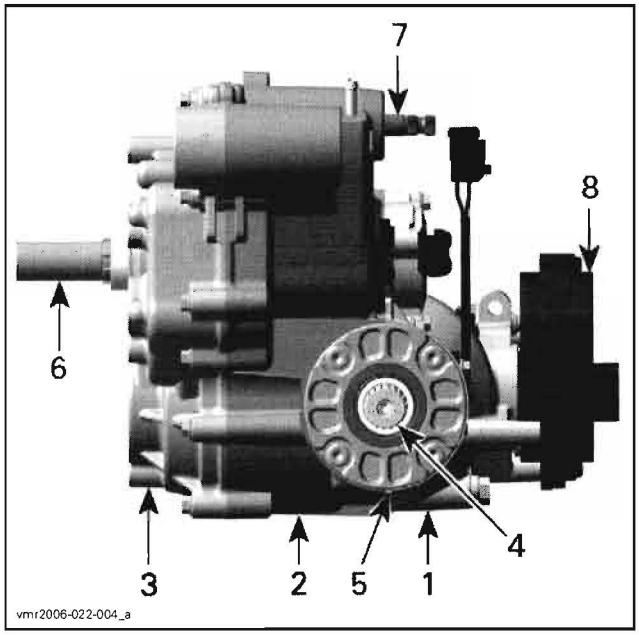

1. *Right housing*
2. *Center housing*
3. *Left housing*
4. *Output shaft*
5. *Bearing cover*
6. *Countershaft*
7. *Shift shaft*
8. *Actuator*

MAINTENANCE

GEARBOX OIL CHANGE

Draining Procedure

Prior to change the oil, ensure vehicle is on a level surface.

Oil change should be done with a warm engine.

⚠ WARNING

The gearbox oil can be very hot.

Place a drain pan under the gearbox drain plug area.

Clean drain plug area and remove magnetic drain plug **no. 42** with its sealing ring **no. 43** to drain gearbox oil.

Remove oil filler screw **no. 44** including its O-ring **no. 45**.

CAUTION: Pay attention not to loose O-ring on drain plug screw.

Wait a while to allow oil flow out of gearbox.

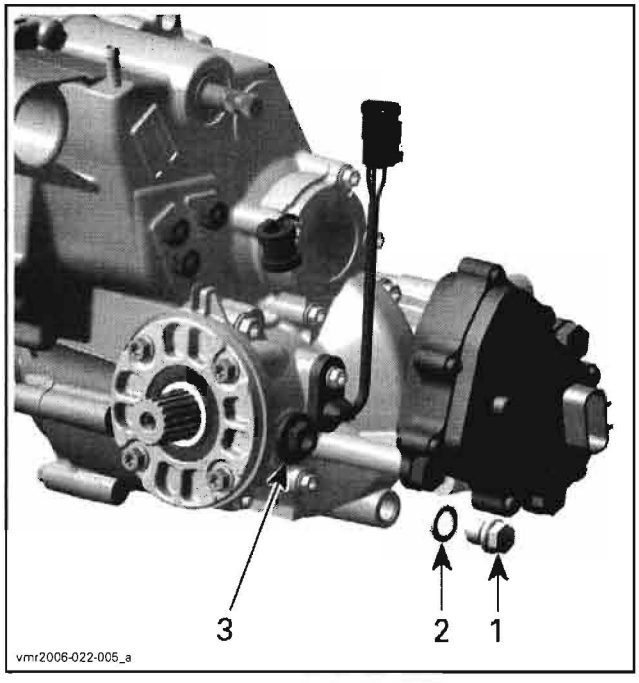

1. *Magnetic drain plug*
2. *Sealing ring*
3. *Oil filler screw*

Dispose gearbox oil as per your local environmental regulations.

Inspection

Oil condition gives information about the teeth condition inside the gearbox. See *TROUBLESHOOTING* section.

www.midwestmanuals.com
Sales@midwestmanuals.com

www.midwestmanuals.com

Clean the magnetic drain plug from metal shavings and dirt. Presence of debris gives an indication of failure inside the gearbox. Check gearbox to correct the problem.

Change gasket ring **no. 43** on the magnetic drain plug if damaged.

Replace O-ring **no. 45** if brittle, hard or otherwise damaged.

Filling Procedure

Make sure that magnetic drain plug **no. 42** is reinstalled and tight.

With the vehicle on a level surface, fill the gearbox through the oil filler hole with XP-S chaincase oil (P/N 413 801 900) or XP-S synthetic chaincase oil (P/N 413 803 300) or with an equivalent product until the oil reaches the lower threads of the oil filler hole (around 400 mL (13.5 oz U.S.)).

PROCEDURES

GEARBOX POSITION INDICATOR SWITCHES

NOTE: The gearbox removal is not necessary to reach the gearbox position indicator switches.

Removal

To reach the gearbox position indicator switches **no. 41**, remove the rear engine cover.

Remove screw retaining indicator switch wire.

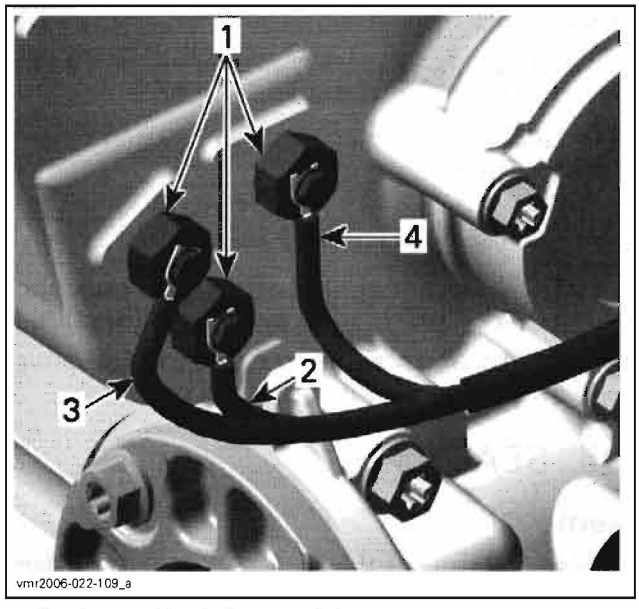

1. *Gearbox position indicator switches*
2. *BROWN/GREY wire*
3. *WHITE/GREY wire*
4. *ORANGE/GREY wire*

Unscrew switch.

Test

Check if gearbox position indicator switches work properly as per following procedure:

Disconnect wires from switches.

NOTE: Remove insulating paint to obtain correct readings.

Put gearbox in park, reverse, neutral, high and low position.

Use a multimeter to measure the resistance from the indicator switch to engine ground. Compare results with the logic table below.

SHIFTER POSITION	CORRESPONDING SWITCH WIRES		
	BROWN/ GREY	WHITE/ GREY	ORANGE/ GREY
L	X		X
H			X
N		X	X
R		X	
P	X	X	

An "X" indicates switch is making ground contact, thus there should be continuity (R is close to 0 Ohms).

A blank space indicates switch is not making contact, there should be no continuity (R = infinite).

If the indicator switch is good, check the vehicle harness and/or indicator lights.

Installation

For installation, reverse the removal procedure. Pay attention to the following details.

Take care do not damage shifting indicator switches threads during installation.

Apply carefully some Loctite 5910 (P/N 293 800 081) on threads of shifting indicator switches.

CAUTION: Do not apply Loctite 5910 on switch plunger, as it will lead to switch malfunction.

If all switches are removed, make sure to put the wires back in the right location.

www.midwestmanuals.com
Sales@midwestmanuals.com

www.midwestmanuals.com

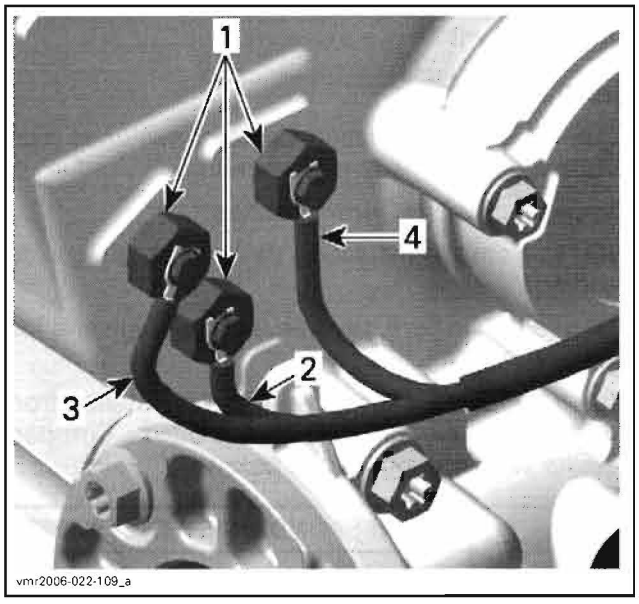

1. *Indicator switches*
2. *BROWN/GREY wire*
3. *WHITE/GREY wire*
4. *ORANGE/GREY wire*

Spray a layer of electrical insulating paint or varnish over switches to prevent shorts and corrosion.



4WD INDICATOR SWITCH

NOTE: The gearbox removal is not necessary to reach the 4WD indicator switch.

Removal

To reach the 4WD indicator switch **no. 40**, remove the rear engine cover.

Remove screw retaining 4WD indicator switch wire.

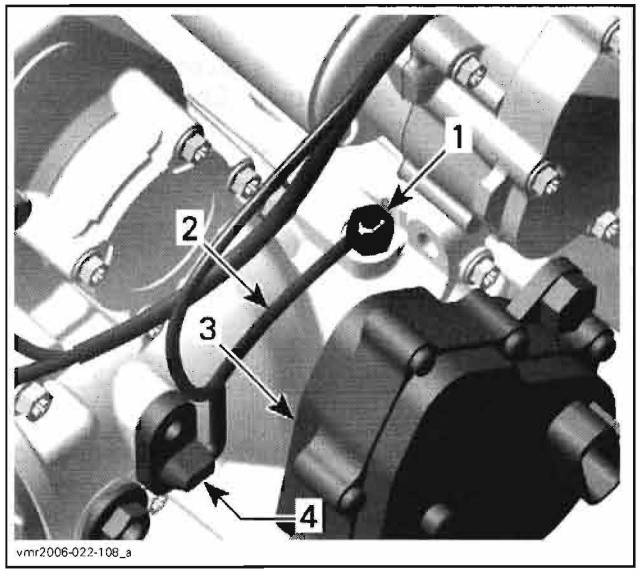

1. *4 WD indicator switch*
2. *BLACK/YELLOW wire for contact to 4WD*
3. *Actuator*
4. *Speed sensor*

Test

Measure switch resistance as follows.

SWITCH POSITION	SWITCH WIRE		RESISTANCE
2WD	BLACK/ YELLOW	Engine ground	Infinite (0L)

If the resistance is out of specification, replace the 4WD indicator switch.

Installation

For installation, reverse the removal procedure. Pay attention to the following details.

Take care do not damage indicator switch threads during installation.

Apply carefully some Loctite 5910 (P/N 293 800 081) on threads of indicator switch.

CAUTION: Do not apply Loctite 5910 on switch plunger, as it will lead to switch malfunction.

Spray a layer of electrical insulating paint or varnish over switch to prevent shorts and corrosion.

OIL SEALS

Removal

Replace oil seals if they are brittle, hard or damaged.

A small flat screwdriver can be used to remove most of these oil seals.

www.midwestmanuals.com
Sales@midwestmanuals.com

www.midwestmanuals.com

CAUTION: Avoid scoring housings, bearing cover, shift shaft, distance sleeve of countershaft or output shaft during oil seal removal.

Countershaft Oil Seal

The countershaft oil seal **no. 47** can be removed without removing gearbox from vehicle. Remove drive and driven pulley and CVT air guide.

NOTE: When oil seal is removed also inspect O-ring **no. 31**.

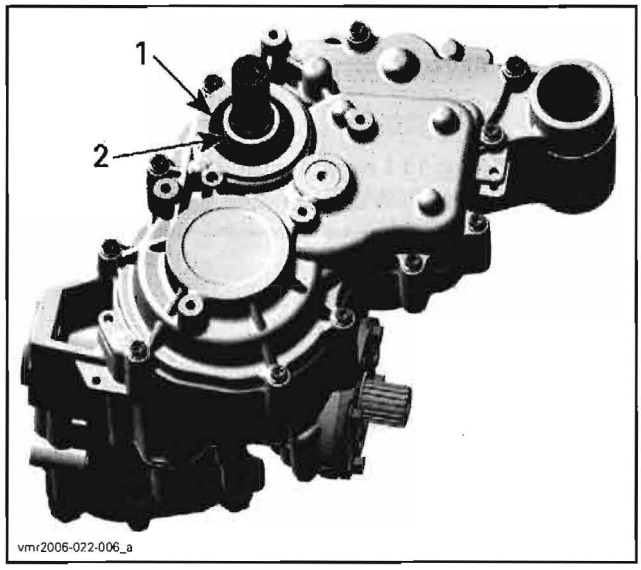

1. Countershaft oil seal
2. Distance sleeve

Shift Shaft Oil Seal

The shift shaft oil seal **no. 38** can be removed without removing the gearbox from the vehicle.

Remove side panel and the shifting plate from shift shaft to reach the oil seal.

Output Shaft Oil Seal

Removal of output shaft oil seal **no. 46** requires that the rear propeller shaft is separated from the output shaft (refer to *DRIVE TRAIN* section). The removal of the gearbox or bearing cover is not necessary.

NOTE: When oil seal is removed also inspect O-ring **no. 4**.

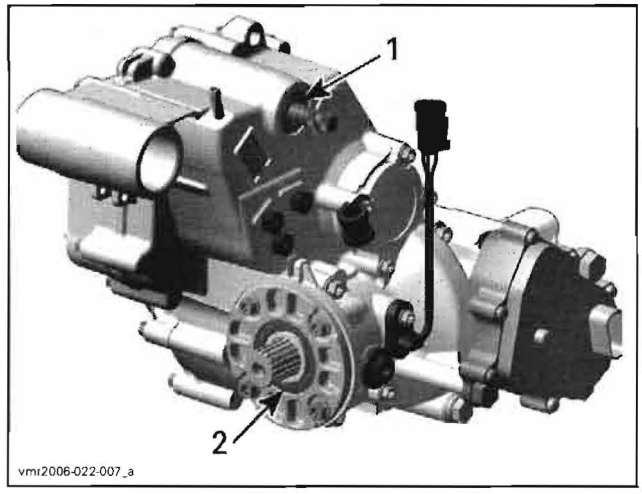

1. Shift shaft oil seal
2. Output shaft oil seal

Inspection

Check bearings behind each oil seal for contamination and/or metal shavings.

Check oil seal running surfaces for scratches. Replace if necessary (see *GEARBOX* below).

Check if the countershaft O-ring **no. 31** and the output shaft O-ring **no. 4** are brittle, hard or damaged. Replace if necessary.

Installation

The installation is the reverse of removal procedure. Pay attention to the following details.

Output Shaft and Countershaft Oil Seal

Install output shaft oil seal and countershaft oil seal with the oil seal installer (P/N 529 036 028).

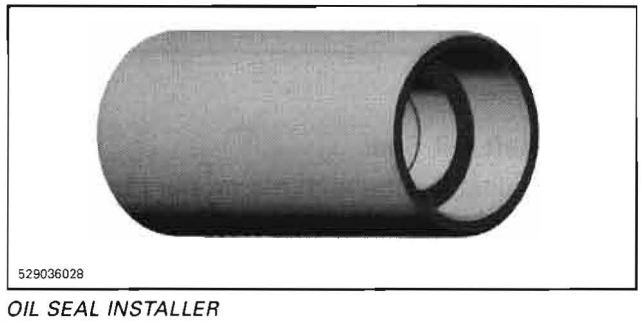

OIL SEAL INSTALLER

www.midwestmanuals.com
Sales@midwestmanuals.com

www.midwestmanuals.com

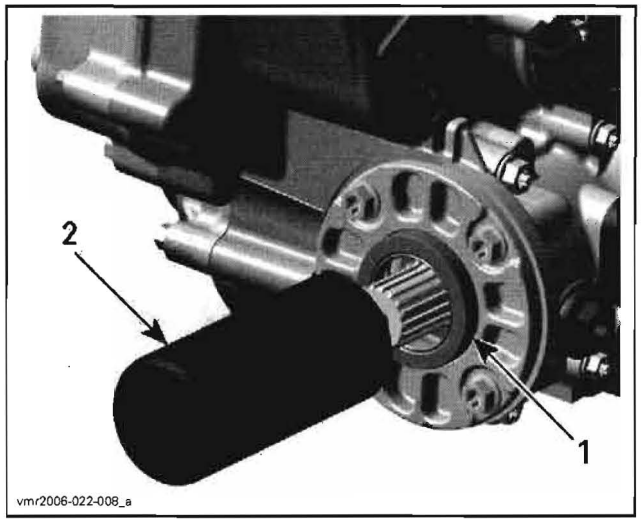

1. Output shaft oil seal
2. Oil seal installer

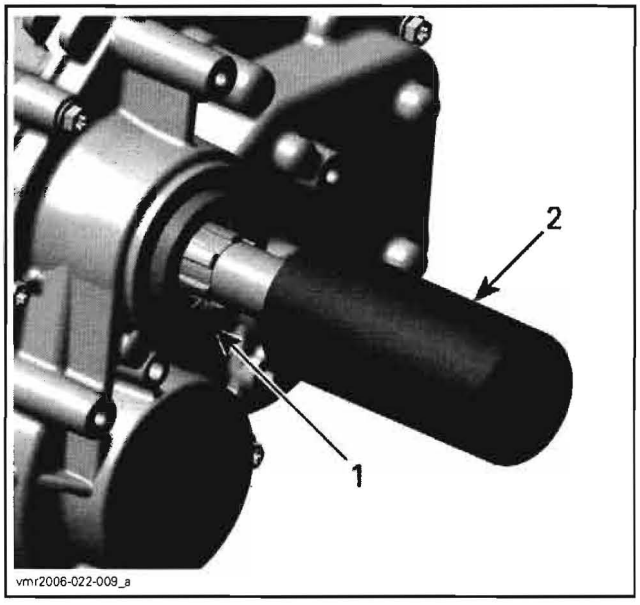

1. Countershaft oil seal
2. Oil seal installer

Shift Shaft Oil Seal

Using a suitable tube with the proper diameter to install the shift shaft oil seal.

If gearbox housing is apart, the oil seal installer (P/N 529 035 758) and installer handle (P/N 420 877 650) can be used for shift shaft oil seal installation.

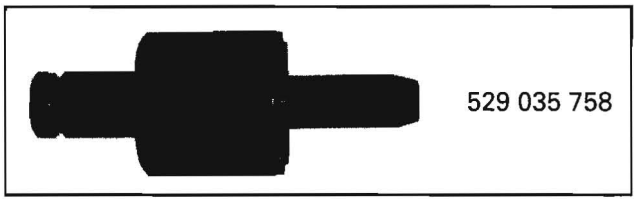

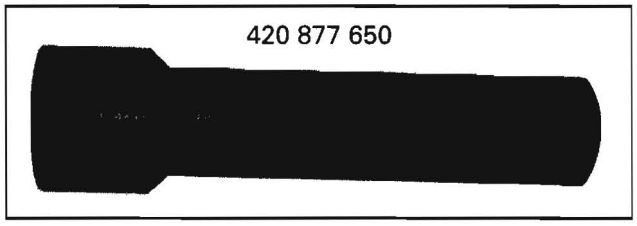

CAUTION: Oil seal must be installed with sealing lip toward gearbox.

ACTUATOR

European Community Models (CE)

Test

Using the Fluke 111 multimeter (P/N 529 035 868), check if the 2WD/4WD selector works properly.



Remove the rear engine cover.

Unplug actuator connector.

- Turn ignition key ON and set engine run/stop switch to RUN.
- Measure voltage as follows.

SWITCH POSITION	SWITCH WIRE		VOLTAGE
2WD	WHITE/BLUE	WHITE	Battery voltage
4WD	WHITE/BLACK		

If the selector is out of specifications, check wires, connectors and replace the selector if necessary.

If the selector is good, check the vehicle harness.

If the vehicle harness is good, replace the actuator **no. 39**.

Removal

NOTE: Before beginning any servicing on the actuator, make sure the vehicle is in 4WD position. No need to remove engine from vehicle.

Remove the RH footrest and the rear engine cover. Refer to *BODY*.

Unplug actuator connector.

www.midwestmanuals.com
Sales@midwestmanuals.com

www.midwestmanuals.com

Place a drain pan under actuator.

Unscrew actuator bolts.

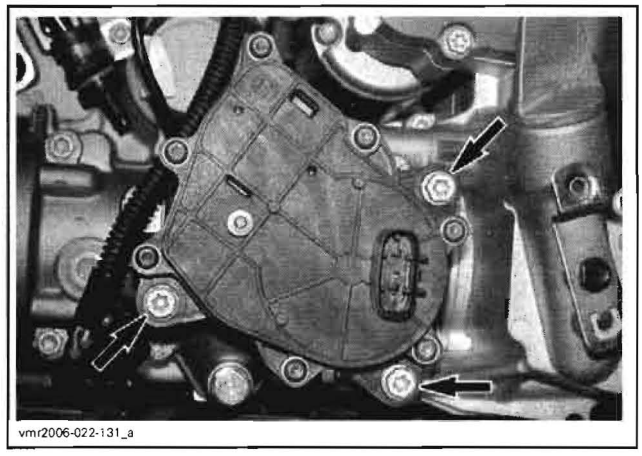
vmr2006-022-131_a

When all actuator bolts are removed, pull the actuator out of housing.

Installation

Apply a small amount of Super Lube grease (P/N 293 550 030) on actuator O-ring.

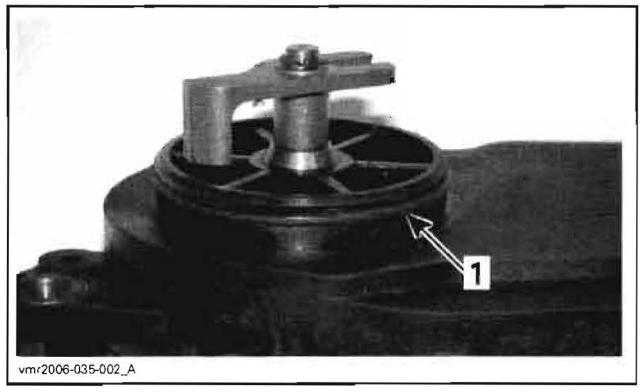

vmr2006-035-002_A

1. Actuator O-ring

Verify if coupling fork **no. 10** is in 4WD position. The coupling fork should be positioned toward the front of vehicle.

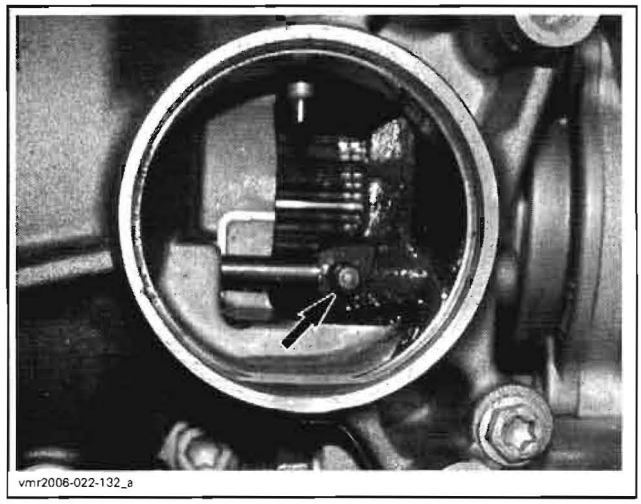
vmr2006-022-132_a

Align the actuator fork with the pin on coupling fork **no. 10** then push the actuator in the housing. See the following illustration to position the actuator correctly.

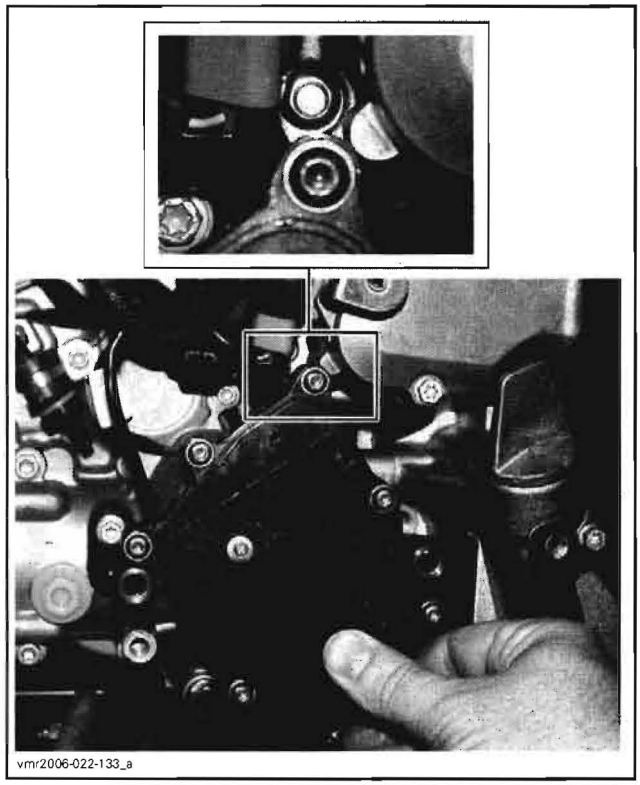
vmr2006-022-133_a

Rotate the actuator counterclockwise until it orients itself to mounting position.

CAUTION: Do not cut or break the actuator O-ring.

Install all actuator bolts then torque them to 25 N•m (18 lbf•ft).

Connect actuator.

Lift the front of vehicle.

Turn front wheels. The front propeller shaft should not turn (the PARK position must be selected).

If the front propeller shaft turns, the actuator is not installed correctly. Remove actuator and reinstall it.

Place ignition switch to ON position and select the 2WD position.

Turn front wheel again. The front propeller shaft. The shaft should turn easily.

If the front propeller shaft does not turn, the actuator is not installed correctly. Remove actuator and reinstall it.

CAUTION: Refill missing gearbox oil, refer to *GEARBOX OIL CHANGE* above.

www.midwestmanuals.com
Sales@midwestmanuals.com

www.midwestmanuals.com

Install all other removed parts.

OUTPUT SHAFT AND COUPLING MECHANISM

Remove gearbox. Refer to *GEARBOX* further in this section.

Before removing the right housing and output shaft **no. 1** measure the backlash on output shaft. This measure will indicate if output shaft adjustment is necessary.

Output Shaft Backlash Procedure

Engage PARK position on the gear shaft to block gearbox.

Remove:

- bearing cover with oil seal

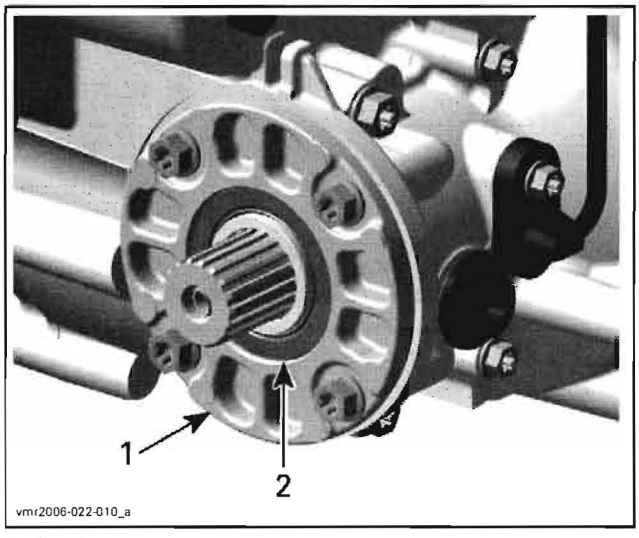

1. Bearing cover
2. Oil seal

- distance sleeve
- O-ring.

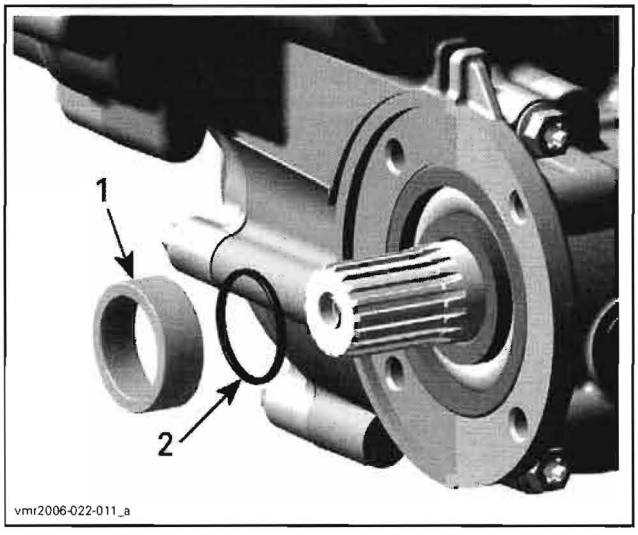

1. Distance sleeve
2. O-ring

Install the backlash measurement tool (P/N 529 036 030) at the end of output shaft.

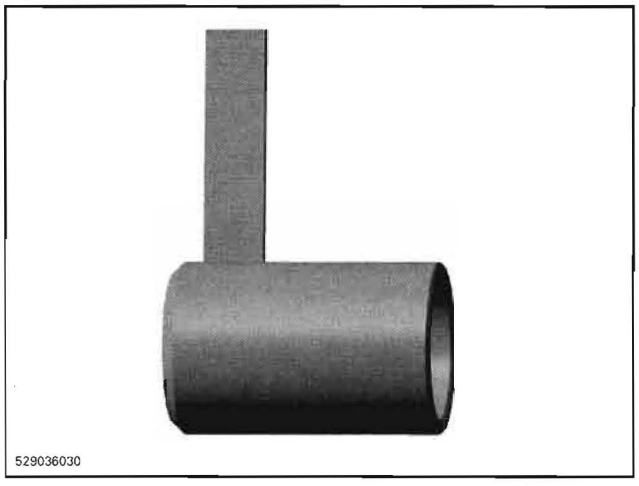

From center of tool bolt, measure 47 mm (1.85 in) and place a mark on the tab.

www.midwestmanuals.com
Sales@midwestmanuals.com

www.midwestmanuals.com

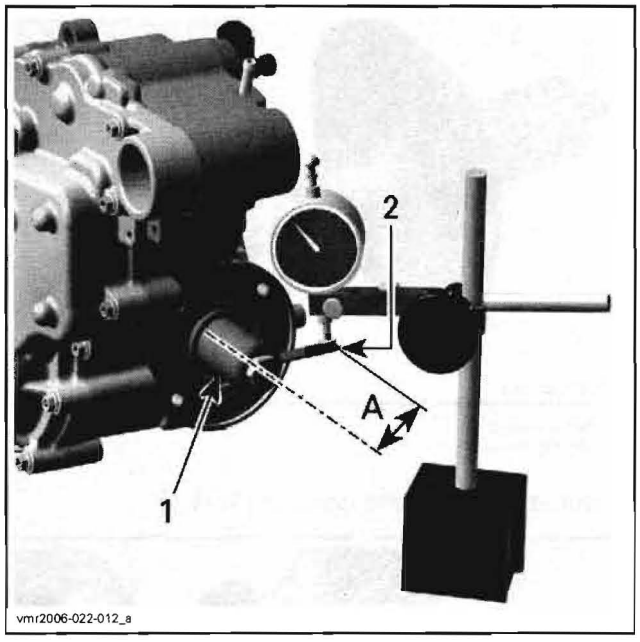

1. Backlash measurement tool
2. Mark on tab
A. 47 mm (1.85 in)

Position the head of the dial indicator, against the tab at a 90° angle and on the line. Then, gently rotate the output shaft.

This reading gives the backlash measurement. Refer to the following table for backlash specifications.

OUTPUT SHAFT BACKLASH	
NEW	0.10 to 0.20 mm (.0039 to .0079 in)
SERVICE LIMIT	0.25 mm (.0098 in)

If backlash is not within the specification, remove the output shaft and select the next thicker or thinner shim to meet the specifications.

NOTE: Use next thicker shim to increase backlash and next thinner shim to reduce backlash.

Removal

Remove actuator **no. 39**.

Remove the bearing cover with oil seal.

Unscrew all bolts retaining the right housing to the center housing.

To remove right housing, use 2 big screwdrivers.

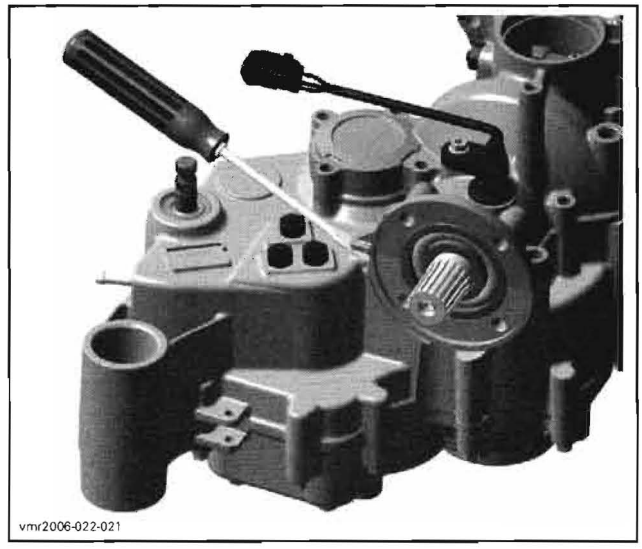

POSITION FOR BIG FLAT SCREWDRIVER

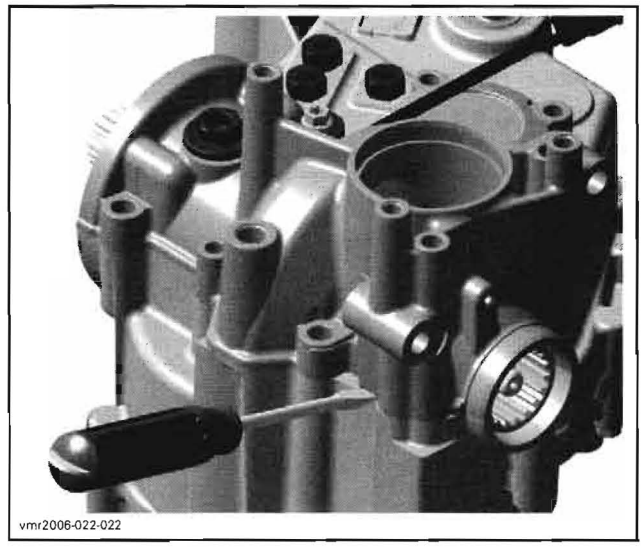

POSITION FOR BIG FLAT SCREWDRIVER

Remove output shaft.

CAUTION: Use a soft hammer to remove output shaft from center housing.

www.midwestmanuals.com
Sales@midwestmanuals.com

www.midwestmanuals.com

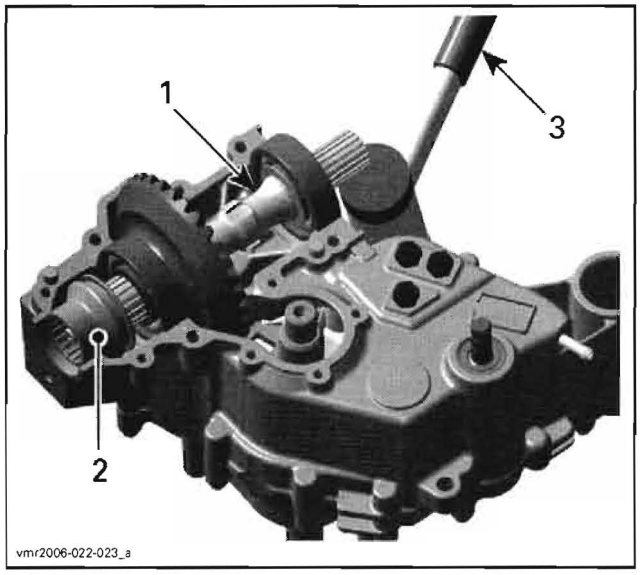

1. *Output shaft*
2. *Coupling sleeve*
3. *Soft hammer*

Continue removal procedure by removing:
- coupling sleeve, O-ring, ball bearing and thrust washer.

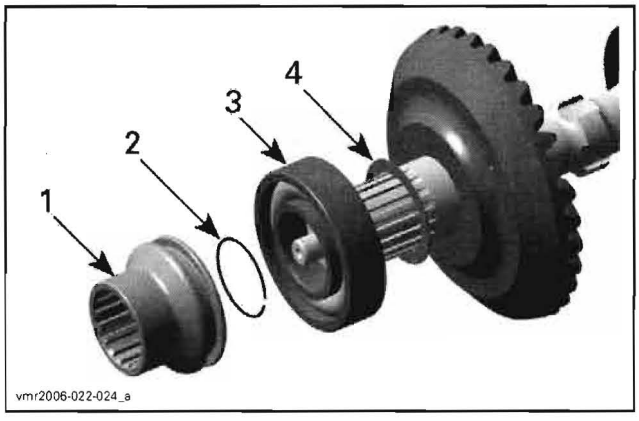

1. *Coupling sleeve*
2. *O-ring*
3. *Ball bearing*
4. *Thrust washer*

- ball bearing and thrust washer

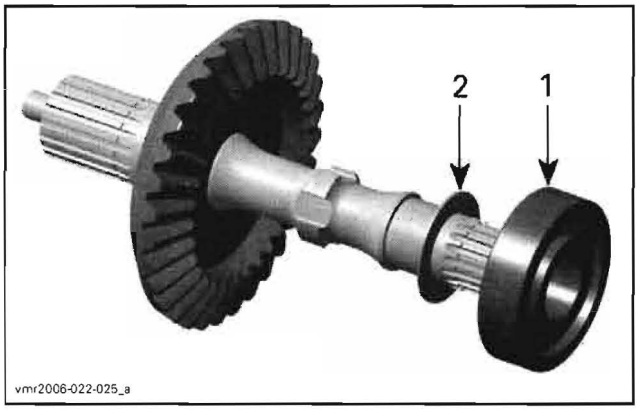

1. *Ball bearing*
2. *Thrust washer*

- set screw, pin and coupling fork.

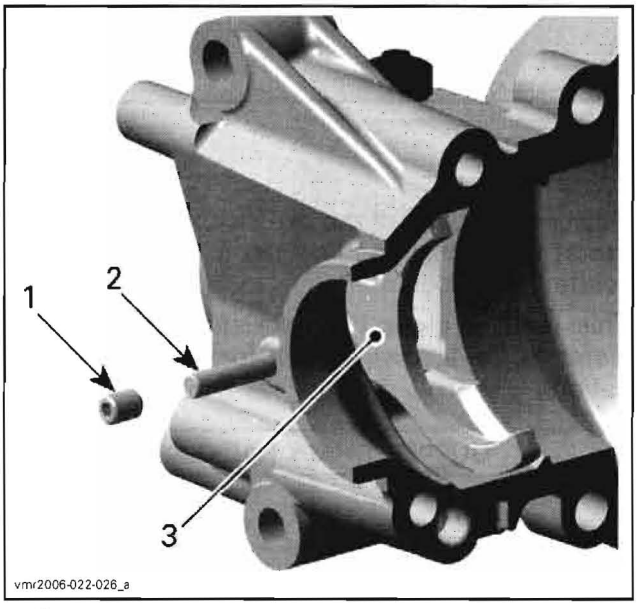

1. *Set screw*
2. *Pin*
3. *Coupling fork*

Inspection

Check output shaft **no. 1** and its gear for cracks, bend, pitting or other visible damages.

Check output shaft splines for wear or other damages.

CAUTION: Always replace output shaft and bevel gear shaft at the same time. Adjust these components upon replacement.

Check if the output shaft bearings **no. 3** and **no. 7** turn freely and smoothly. Replace if necessary.

Replace oil seal **no. 46** if brittle, hard or damaged.

Replace O-rings **no. 4** and **no. 8** if brittle, hard or damaged.

Check splines of coupling sleeve **no. 9** for wear or other damages.

www.midwestmanuals.com
Sales@midwestmanuals.com

www.midwestmanuals.com

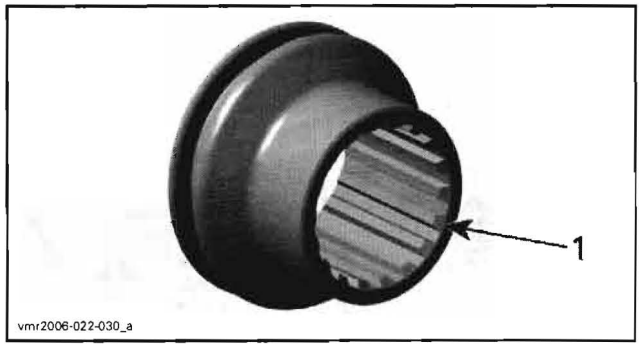

1. Inspect splines

Measure the coupling sleeve groove width.

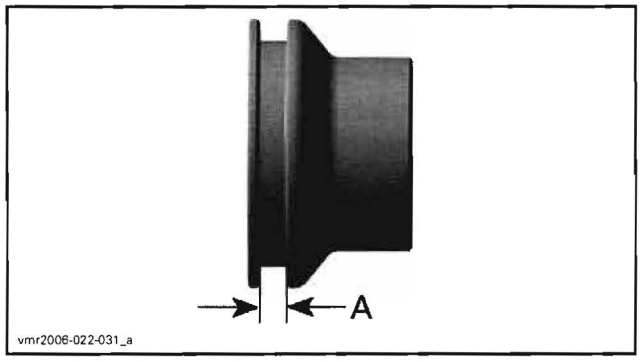

A. Groove width

COUPLING SLEEVE GROOVE WIDTH	
NEW	5.25 to 5.35 mm (.207 to .211 in)
SERVICE LIMIT	5.50 mm (.217 in)

Check coupling fork claw thickness.

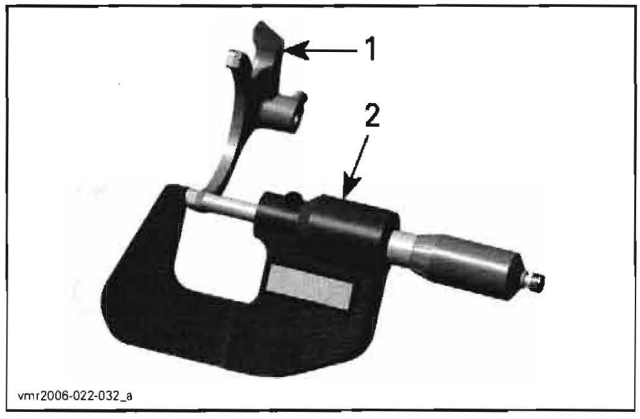

1. Coupling fork
2. Micrometer

COUPLING FORK CLAW THICKNESS	
NEW	4.95 to 5.05 mm (.195 to .199 in)
SERVICE LIMIT	4.80 mm (.189 in)

Clean housing split surface and especially the bearing areas from metal particles or other contamination.

Installation

Install thrust washer **no. 6**, bearing **no. 7**, O-ring **no. 8** and coupling sleeve **no. 9** onto the output shaft.

Install thrust washer **no. 2** and ball bearing **no. 3**. O-ring **no. 4** and distance sleeve **no. 5** are not installed at this time.

Place the output shaft into the center housing.

Use soft hammer to put bearing exactly in place against center housing.

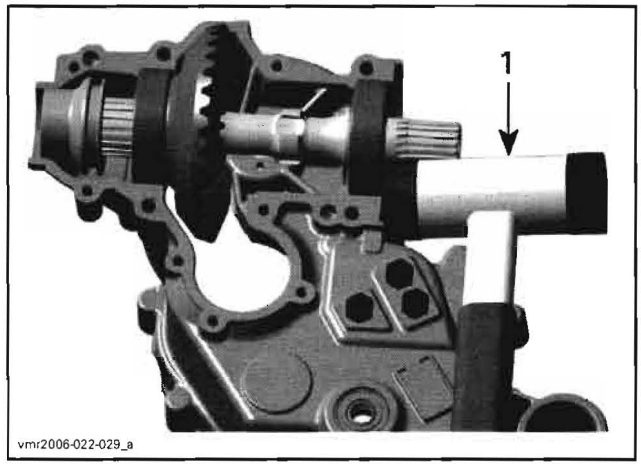

1. Soft hammer

Clean the bearing cover location then attach bearing cover with oil seal to the housing.

Temporarily install the right housing with the four (4) M8 TORX screws beside bearing seats.

NOTE: Prior to tightening the TORX screws, tap on the gear end of output shaft with a soft hammer to take up all gear free play.

Verify output shaft backlash. Refer to *OUTPUT SHAFT BACKLASH PROCEDURE* in this section. Adjust as required.

If backlash is within specifications, remove dial indicator, backlash measuring tool, bearing cover and right housing.

NOTE: Install coupling fork, pin and set screw in right housing before applying sealant to the mating surface.

www.midwestmanuals.com
Sales@midwestmanuals.com

www.midwestmanuals.com

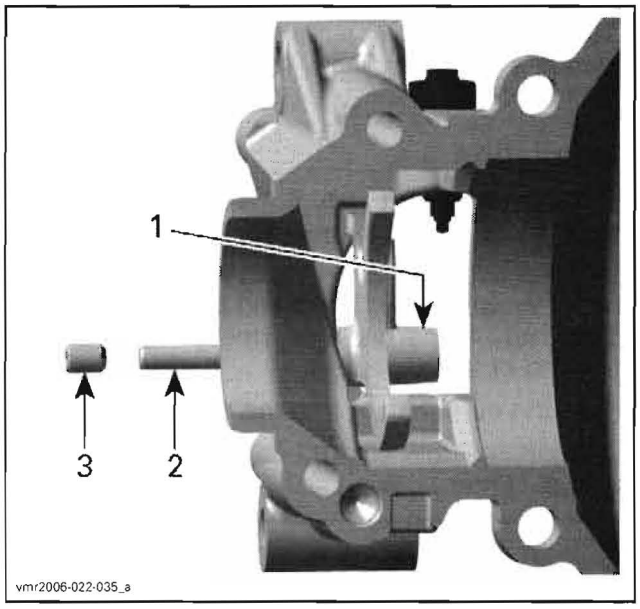

1. *Coupling fork*
2. *Pin*
3. *Set screw*

Clean all metal components in a solvent.

Housing mating surfaces are best cleaned using a combination of Loctite chisel (gasket remover) (P/N 413 708 500) and a brass brush. Brush a first pass in one direction then make the final brushing perpendicularly (90°) to the first pass cross (hatch).

CAUTION: Do not wipe with rags. Use a new clean hand towel only.

IMPORTANT: When beginning the application of sealant, the assembly and the first torquing should be done within 10 minutes. It is suggested to have all you need on hand to save time.

Use Loctite 5910 (P/N 293 800 081) on mating surfaces.

Use a plexiglass plate and apply some sealant on it. Use a soft rubber roller (50 - 75 mm (2 - 3 in)), available in arts products suppliers for printing, and roll the sealant to get a thin uniform coat on the plate (spread as necessary). When ready, apply the sealant on housing mating surfaces.

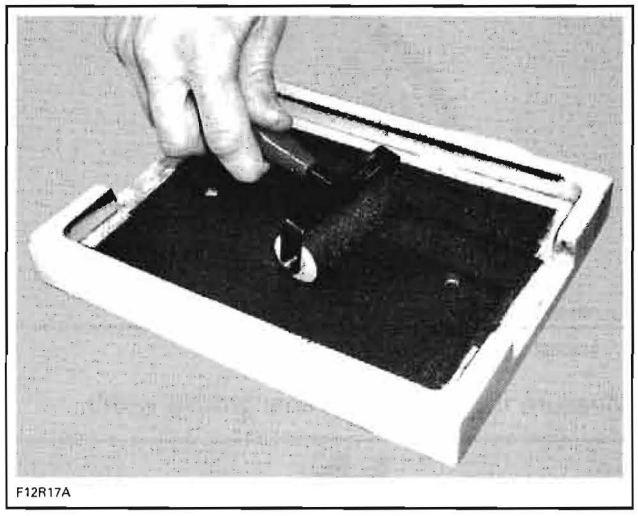

Do not apply in excess as it will spread out inside housings.

NOTE: It is recommended to apply this specific sealant as described here to get a uniform application without lumps. If you do not use the roller method, you may use your finger to uniformly distribute the sealant (using a finger will not affect the adhesion).

Install all other screws on right housing then the O-ring **no. 4** and the distance sleeve **no. 5** on end of output shaft. Chamfered bore of distance sleeve has to face the engine.

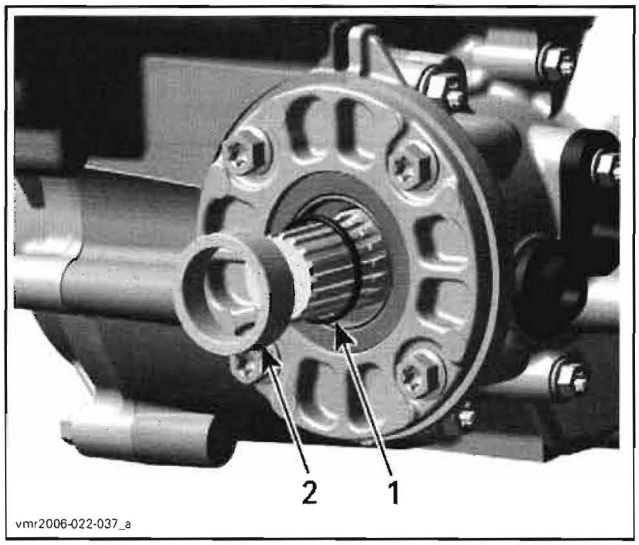

1. *O-ring*
2. *Distance sleeve*

NOTE: To install the right housing align the coupling fork **no. 10** with the groove in the coupling sleeve **no. 9**.

First, torque the four (4) M8 Torx screws in a criss-cross sequence by hand then retighten to 25 N•m (18 lbf•ft).

www.midwestmanuals.com
Sales@midwestmanuals.com

www.midwestmanuals.com

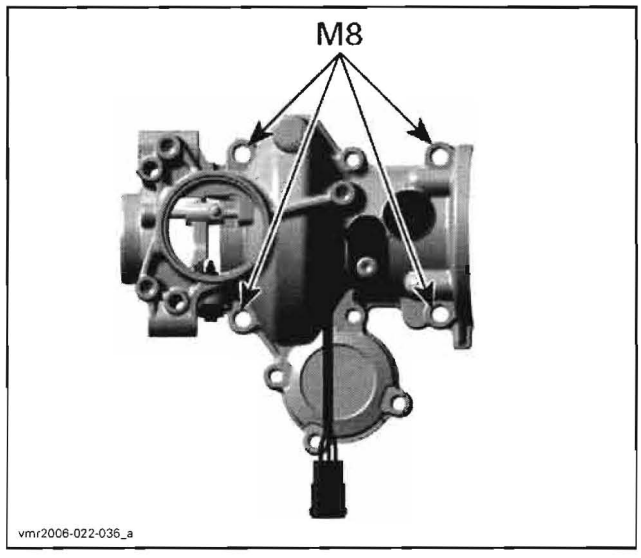

Tighten all M6 Torx screws to 10 N•m (89 lbf•**in**)

Before installing bearing cover, apply Loctite 5910 (P/N 293 800 081) on the housing and Super Lube grease (P/N 293 550 030) on seal.

Install the actuator, refer to *ACTUATOR*.

Once this is done, complete final assembly.

GEARBOX

Removal

Remove engine from vehicle and place it on footrest support. Refer to *ENGINE REMOVAL AND INSTALLATION* for the procedure.

Drain gearbox. Refer to *GEARBOX OIL CHANGE* in *MAINTENANCE* of this section for the procedure.

Unscrew the three (3) nuts that attach the gearbox to the engine.

Pull gearbox to separate it from engine.

Disassembly

NOTE: During gearbox disassembly, inspect the condition of each part closely.

Remove the output shaft. Refer to *OUTPUT SHAFT AND COUPLING MECHANISM* in this section.

Push bevel gear **no. 11** with a pin slightly down and measure the axial clearance of bevel gear with a feeler gauge.

NOTE: Bevel gear axial clearance must be measured before center and left housings separation.

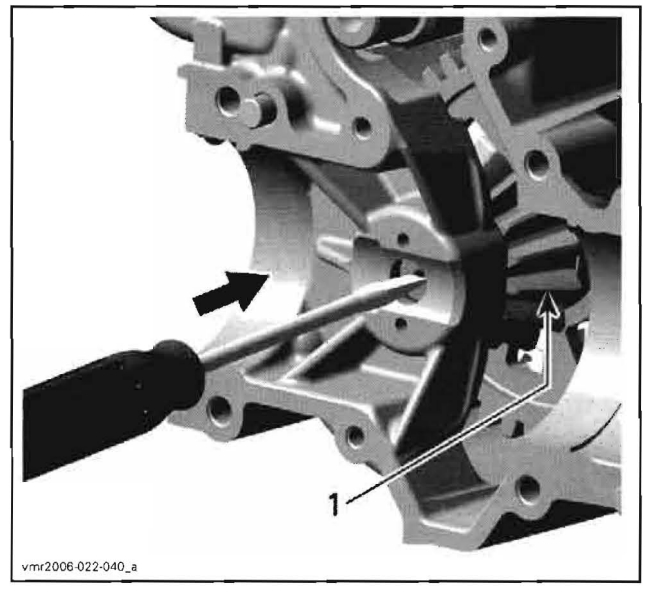

1. Bevel gear

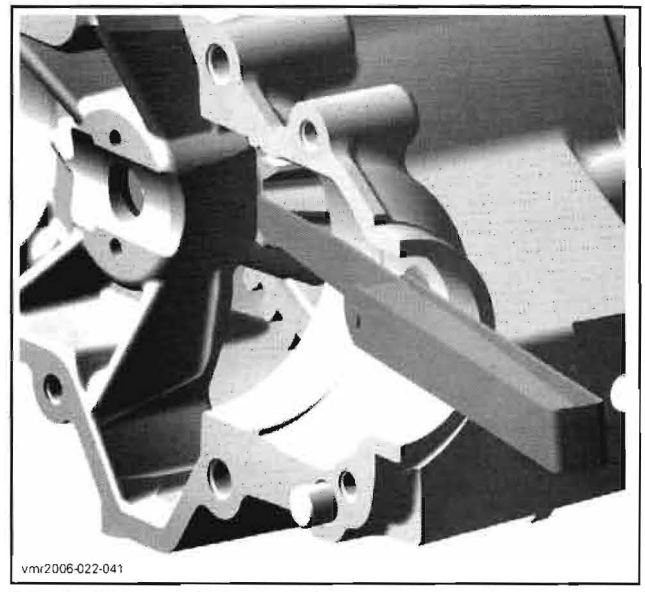

MEASURE AXIAL CLEARANCE OF BEVEL GEAR

BEVEL GEAR AXIAL CLEARANCE	
NEW	0.02 to 0.15 mm (.00079 to .0059 in)
SERVICE LIMIT	0.19 mm (.0075 in)

Unscrew the left housing screws.

Place the left housing on a wood stand, center housing pointing upwards.

Using 2 big flat screwdrivers, lift the center housing.

www.midwestmanuals.com
Sales@midwestmanuals.com

www.midwestmanuals.com

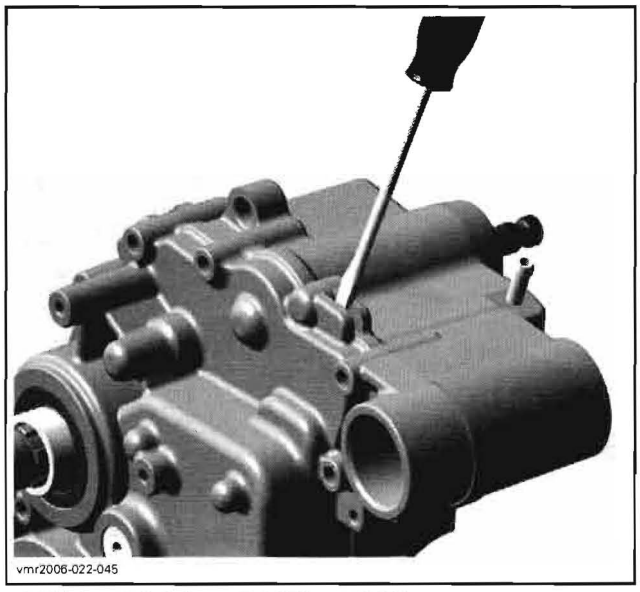

POSITION FOR BIG FLAT SCREWDRIVER

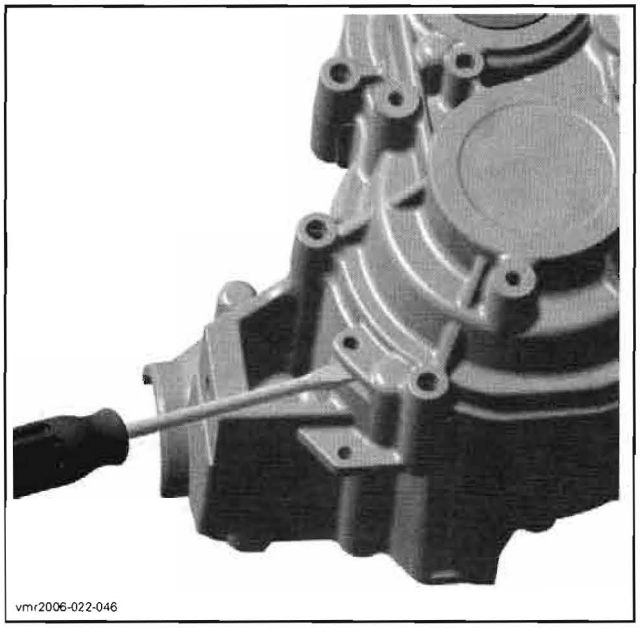

POSITION FOR BIG FLAT SCREWDRIVER

Remove center housing completely.

Remove shift shaft assembly.

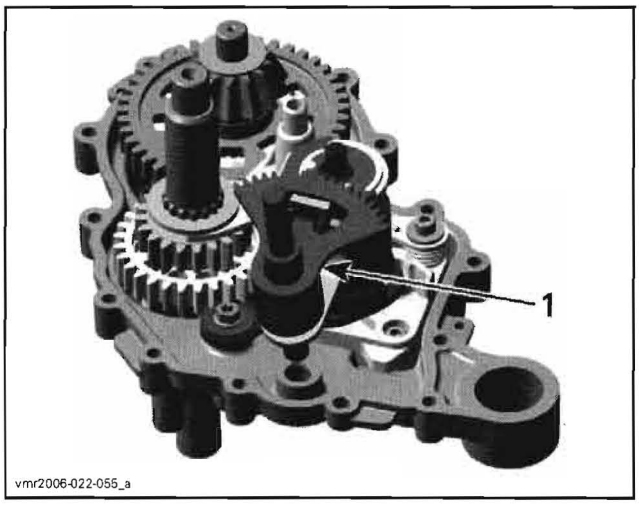

1. Shift shaft assembly

Remove shift fork shaft.

Remove disengage shift fork from shift drum.

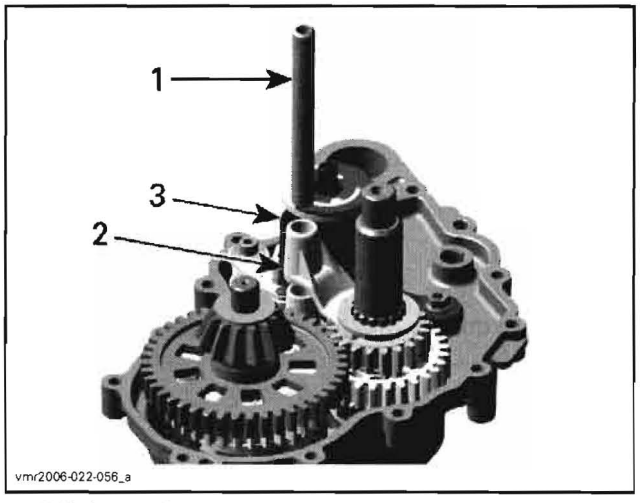

1. Shift fork shaft
2. Shift fork
3. Shift drum

Remove bevel gear shaft with low range gear assembly and shim.

www.midwestmanuals.com
Sales@midwestmanuals.com

www.midwestmanuals.com

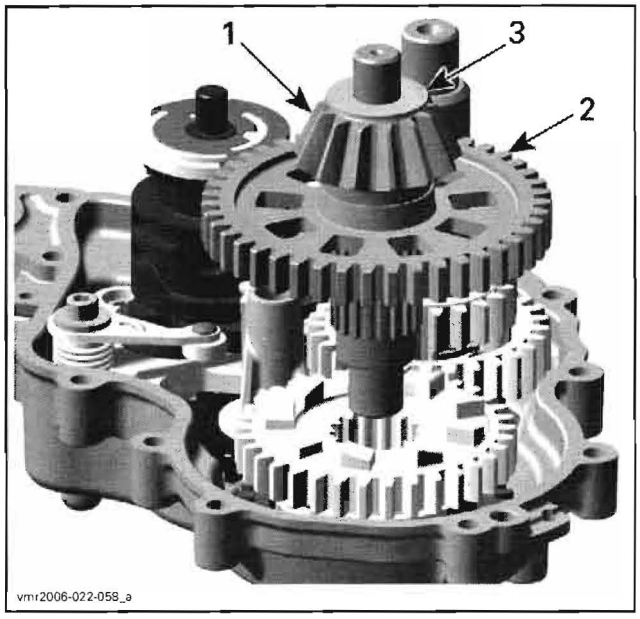

1. *Bevel gear*
2. *Low range gear*
3. *Shim*

Remove sliding gear with shift fork.

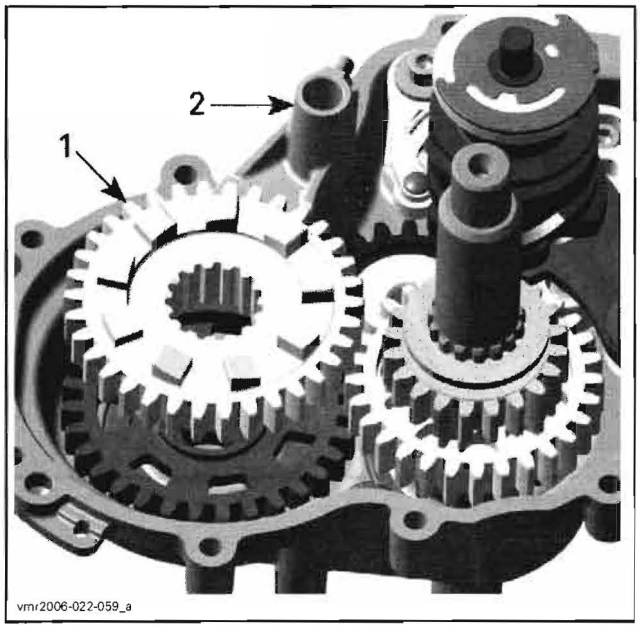

1. *Sliding gear*
2. *Shift fork*

Remove thrust washer, needle bearing and reverse gear.

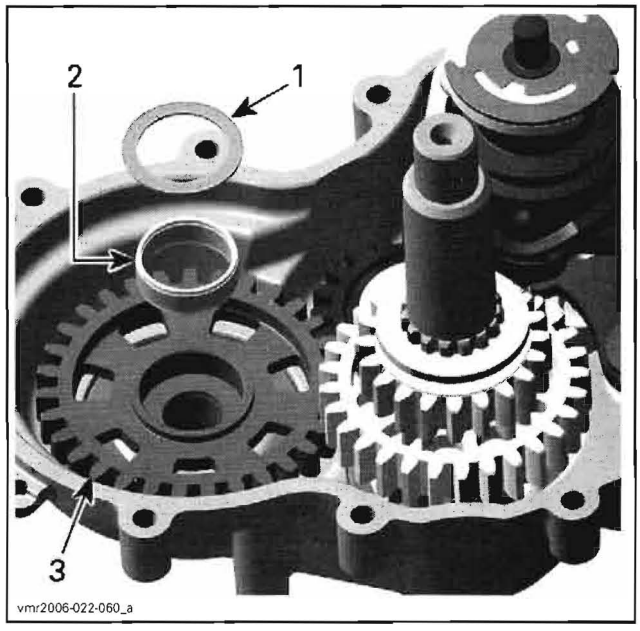

1. *Thrust washer*
2. *Needle bearing*
3. *Reverse gear*

Remove shim on CVT side.

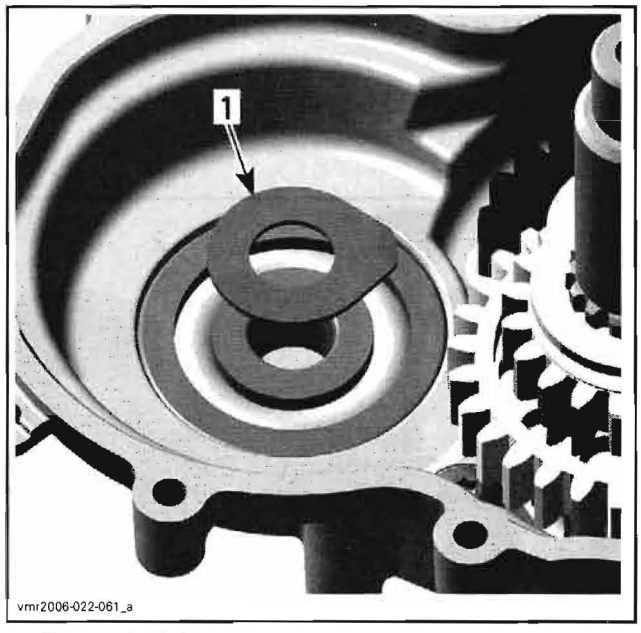

1. *Shim on CVT side*

www.midwestmanuals.com
Sales@midwestmanuals.com

www.midwestmanuals.com

Remove countershaft **no. 18** with low range gear and high range gear assembly.

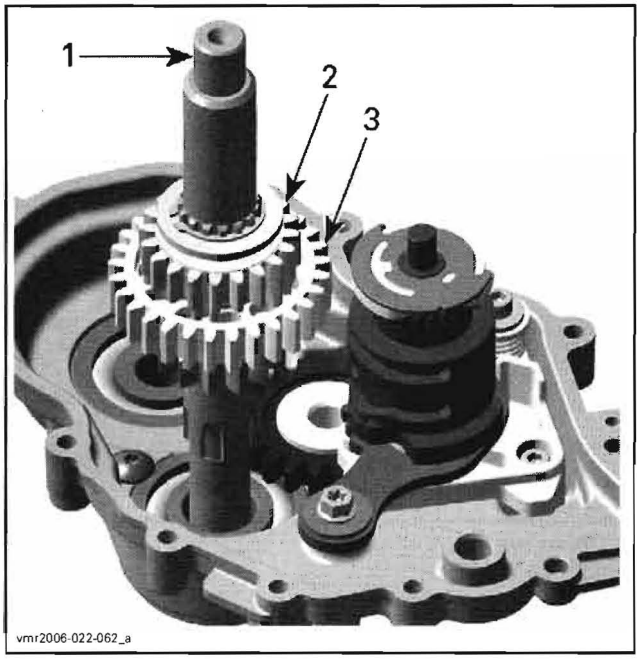

1. Countershaft
2. Low range gear
3. High range gear

Insert a flat screwdriver in the slot of index lever. Turn screwdriver clockwise and remove shift drum.

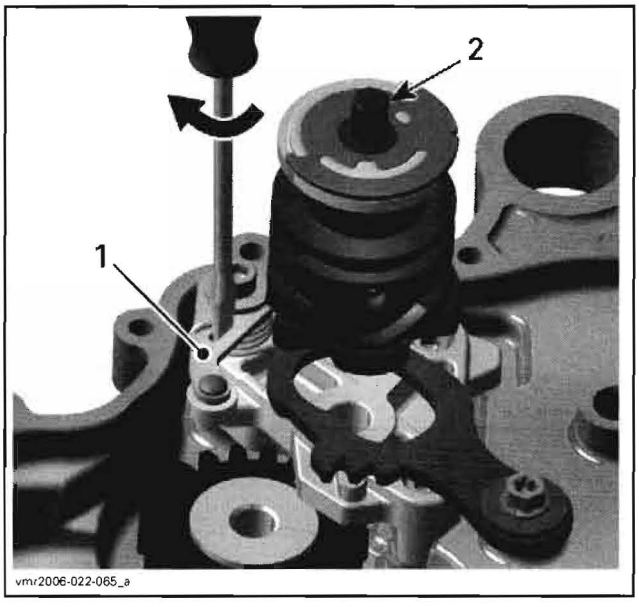

1. Index lever
2. Shift drum

Continue by removing the following;
– parking lock lever

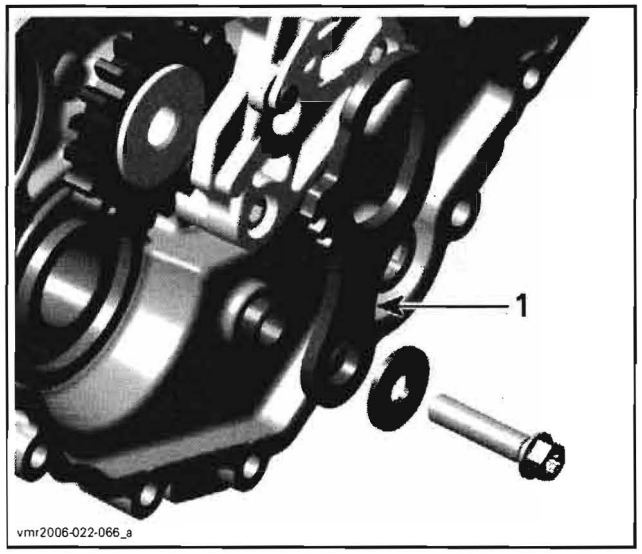

1. Parking lock lever

– index lever with washer, step ring and spring

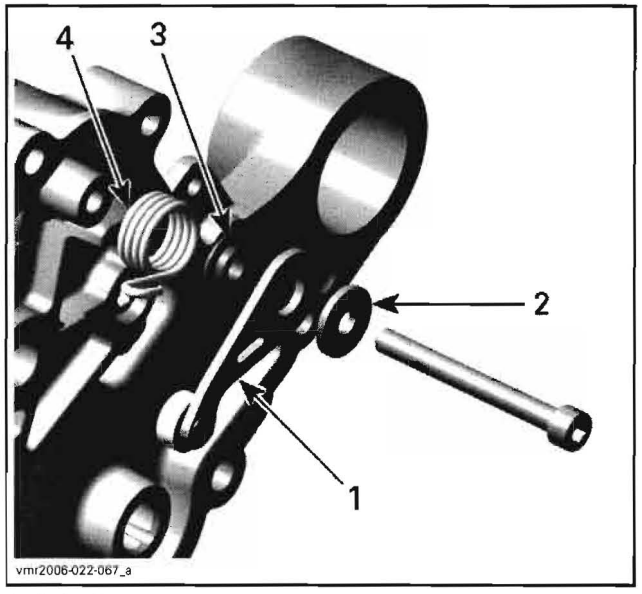

1. Index lever
2. Washer
3. Step ring
4. Index spring

– support flange **no. 37**.

To remove intermediate gear **no. 23** and needle bearing **no. 22**, use a press bench to push out the intermediate gear shaft **no. 21**.

www.midwestmanuals.com
Sales@midwestmanuals.com

www.midwestmanuals.com

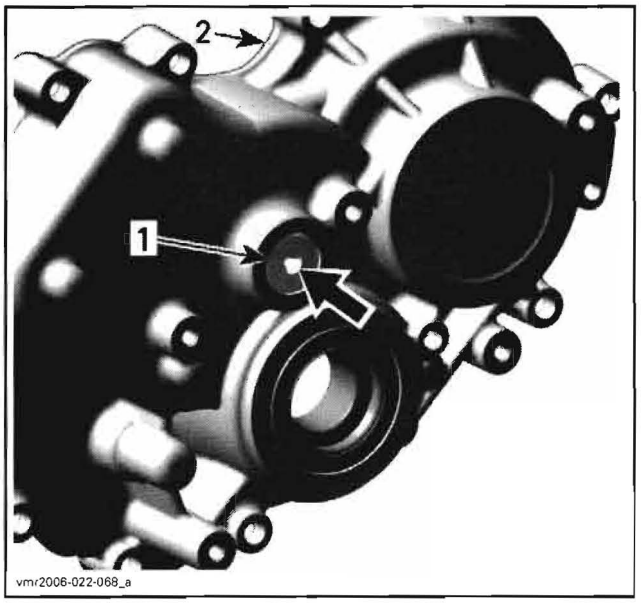

PRESS SHAFT IN THE DIRECTION AS SHOWN BY THE ARROW
1. *Intermediate gear shaft*
2. *Left housing*

Bearing Removal in Housing

If necessary heat housing up to 100°C (212°F) before removing ball bearings or needle bearings.

⚠ WARNING

Clean oil, outside and inside, from housing before heating.

CAUTION: Always support gearbox housings properly when ball bearings or needle bearings are removed. Housing damages may occur if this procedure is not performed correctly.

To remove bevel gear needle bearing use a punch.

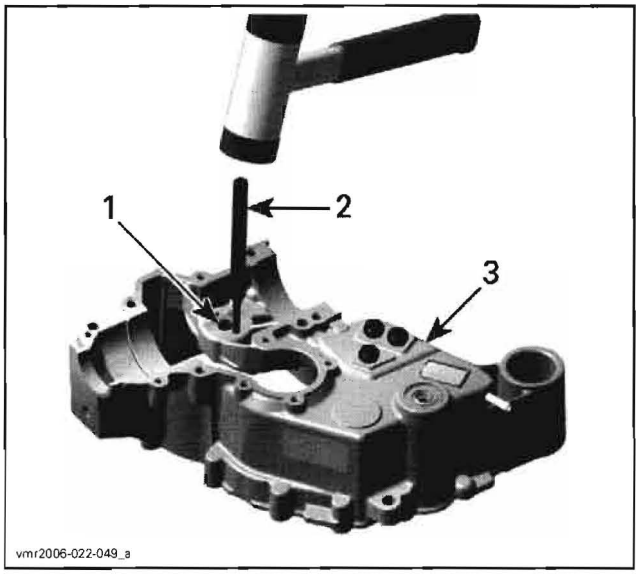

1. *Bevel gear needle bearing*
2. *Punch*
3. *Center housing*

To remove ball bearings of bevel gear **no. 36** and needle bearing of countershaft **no. 33**, use a blind hole bearing puller.

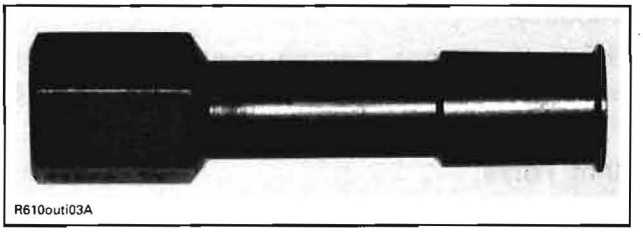

For countershaft ball bearing, remove screw and intermediate gear shaft, then push with a suitable puller from outside in.

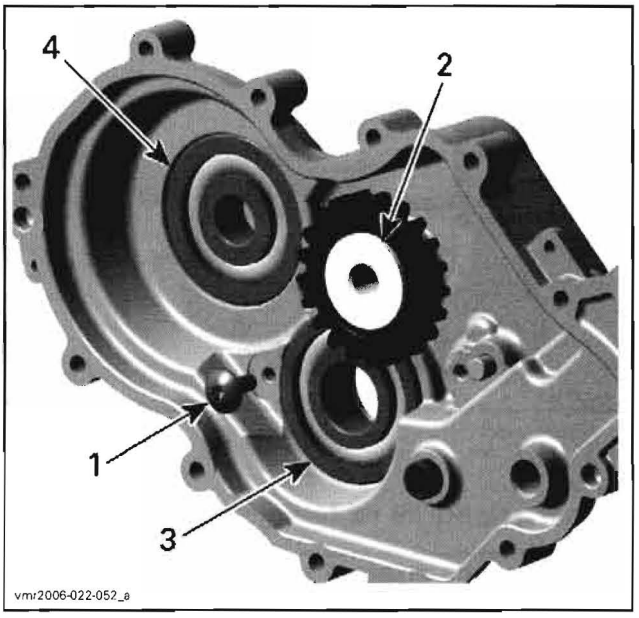

1. *Screw*
2. *Intermediate gear shaft*
3. *Ball bearing countershaft*
4. *Bevel gear ball bearing*

Inspection

Always verify for the following when inspecting gearbox components:

- gear teeth damage
- worn or scoured bearing surfaces
- worn or scoured shift fork
- worn or scoured shift fork shaft
- rounded engagement dogs and slots
- bent shift forks
- bent shift fork shaft
- worn shift fork engagement pins
- worn tracks on shift drum
- worn shift fork engagement groove
- worn splines on shafts and gears.

www.midwestmanuals.com
Sales@midwestmanuals.com

www.midwestmanuals.com

Bearings

Check if bearings **no. 34** and **no. 36** as well as needle bearings **no. 33** and **no. 35** turn freely and smoothly.

Check all bearings, bearing points, tooth flanks, taper grooves and annular grooves. Annular grooves must have sharp edges.

Shift Forks

Check both shift forks for visible damage, wear or bent shift fork claws.

Measure the shift fork claw thickness.

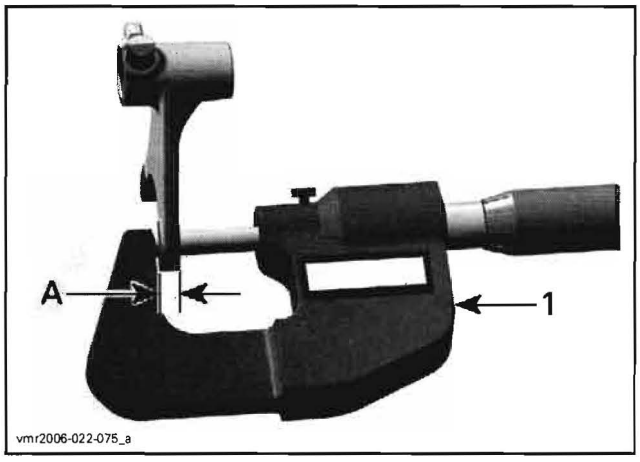

1. Micrometer
A. Shift fork claw thickness

– Shift fork **no. 25** for high gear shifting.

SHIFT FORK CLAW THICKNESS (high gear shifting)	
NEW	4.80 to 4.90 mm (.189 to .193 in)
SERVICE LIMIT	4.70 mm (.185 in)

– Shift fork **no. 26** for low/reverse gear shifting.

SHIFT FORK CLAW THICKNESS (low/reverse gear shifting)	
NEW	5.10 to 5.20 mm (.200 to .205 in)
SERVICE LIMIT	5.00 mm (.197 in)

Measure shift fork pins.

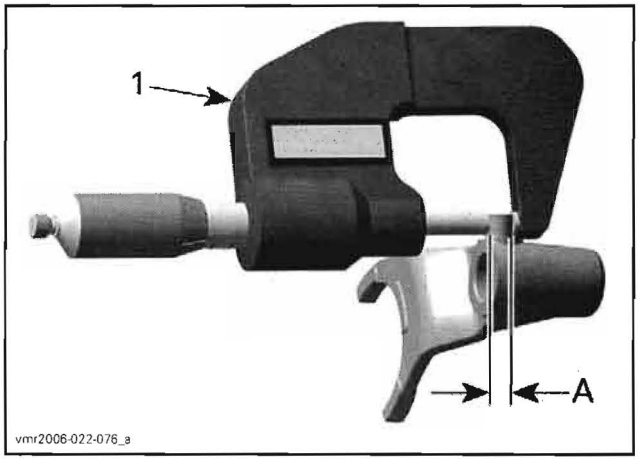

1. Micrometer
A. Shift fork pin diameter

SHIFT FORK PIN DIAMETER	
NEW	6.920 to 6.970 mm (.272 to .274 in)
SERVICE LIMIT	6.850 mm (.270 in)

Shift Drum

Check shift drum tracks for scouring or heavy wear, like rounded engagement slots.

Replace isolating washer **no. 27** if there are signs of wear or visible damages.

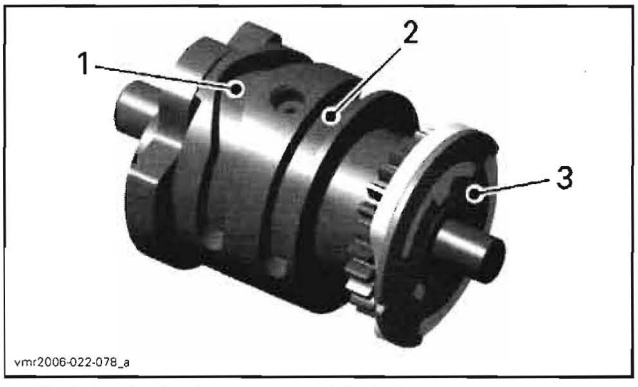

1. Track for the low/reverse gear shift fork
2. Track for the high gear shift fork
3. Isolating washer on the shift drum

Levers

Check parking lever **no. 29** for cracks or other damages.

Index lever with roller **no. 28** must move freely.

Gears

NOTE: Replace gears only together with the corresponding meshing gears. Always replace circlips and use special pliers to install them.

Measure the width of shift fork engagement groove.

www.midwestmanuals.com
Sales@midwestmanuals.com

www.midwestmanuals.com

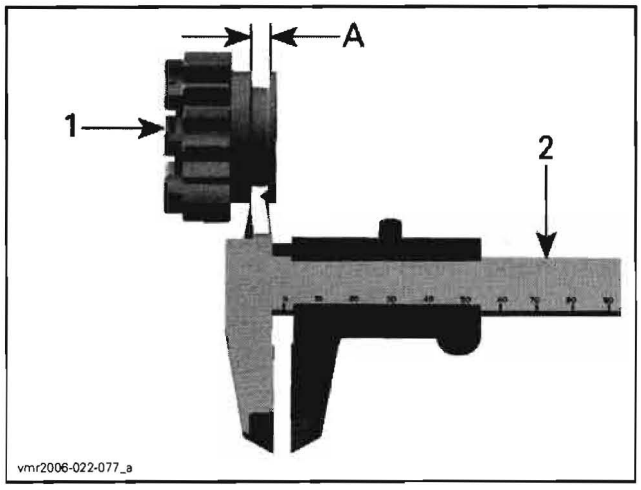

1. Main gear
2. Caliper
A. Width for engagement of shift fork

– Gear **no. 20** for high gear shifting.

WIDTH OF SHIFT FORK ENGAGEMENT GROOVE (high gear shifting)	
NEW	5.00 to 5.10 mm (.197 to .201 in)
SERVICE LIMIT	5.20 mm (.205 in)

– Gear **no. 15** for low/reverse gear shifting.

WIDTH OF SHIFT FORK ENGAGEMENT GROOVE (low/reverse gear shifting)	
NEW	5.30 to 5.40 mm (.209 to .213 in)
SERVICE LIMIT	5.50 mm (.217 in)

Check free pinions **no. 14**, **no. 16**, **no. 19** and **no. 23** for wear.

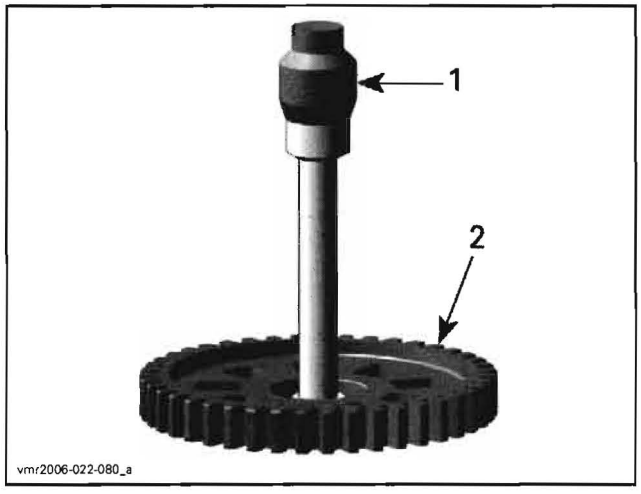

TYPICAL
1. Micrometer
2. Free pinion

DIAMETER FREE PINION	
NEW	29.000 to 29.013 mm (1.1417 to 1.1422 in)
SERVICE LIMIT	29.015 mm (1.1423 in)

Shafts

Check shift shaft **no. 30** for worn splines and gears.

Check intermediate shaft for wear.

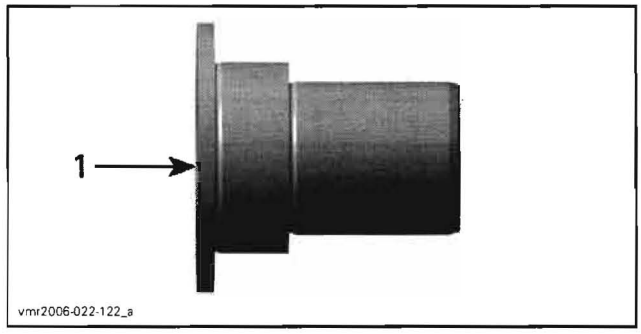

1. Intermediate gear bearing

INTERMEDIATE GEAR SHAFT	
NEW	24.979 to 25.000 mm (.9834 to .9842 in)
SERVICE LIMIT	24.977 mm (.9833 in)

Check countershaft for wear.

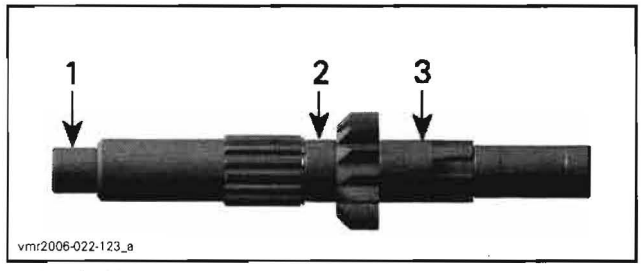

1. MAG side
2. Free pinion bearing
3. CVT side

COUNTERSHAFT	
SERVICE LIMIT	
MAG side	17.990 mm (.708 in)
Free pinion bearing	24.970 mm (.983 in)
CVT side	24.970 mm (.983 in)

Check bevel gear shaft.

www.midwestmanuals.com
Sales@midwestmanuals.com

www.midwestmanuals.com

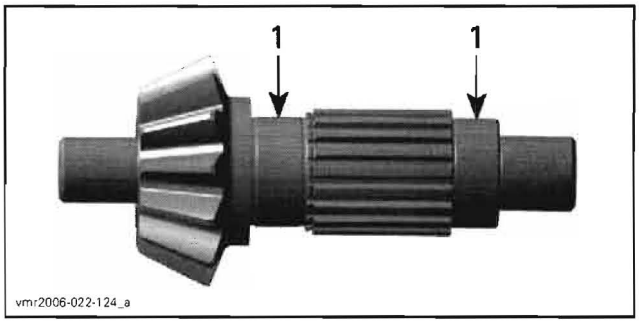

1. Free pinion bearings

BEVEL GEAR SHAFT	
SERVICE LIMIT	
Free pinion bearing	24.984 mm (.9836 in)

Shims

Always replace shim by a new one with the same thickness, when reassembling the gearbox with existing output shaft no. 1 and bevel gear shaft no. 11.

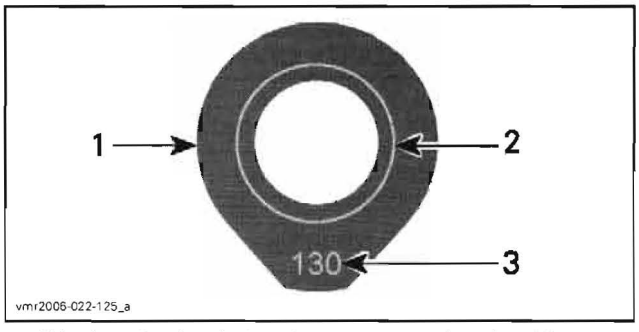

1. Shim for adjusting the bevel gear on center housing side
2. Area where wear signs appear
3. Thickness of the shim

Adjustment

Bevel Gear

NOTE: Only necessary if the backlash and axial clearance of the bevel gear is out of specification or if parts are changed (output shaft, bevel gear shaft or housing).

There are 2 adjustments to perform on the bevel gear.

- bevel gear backlash on center housing
- bevel gear axial clearance on left housing.

The bevel gear backlash is adjusted by finding the proper shim thickness E as per following illustration.

The bevel gear axial clearance is adjusted by finding the proper shim thickness J as per following illustration.

Clean mating surface of housing before taking measurements using a combination of Loctite chisel (gasket remover) (P/N 413 708 500) and a brass brush. Brush a first pass in one direction then make the final brushing perpendicularly (90°) to the first pass cross (hatch).

CAUTION: Do not wipe with rags. Use a new clean hand towel only.

www.midwestmanuals.com
Sales@midwestmanuals.com

www.midwestmanuals.com

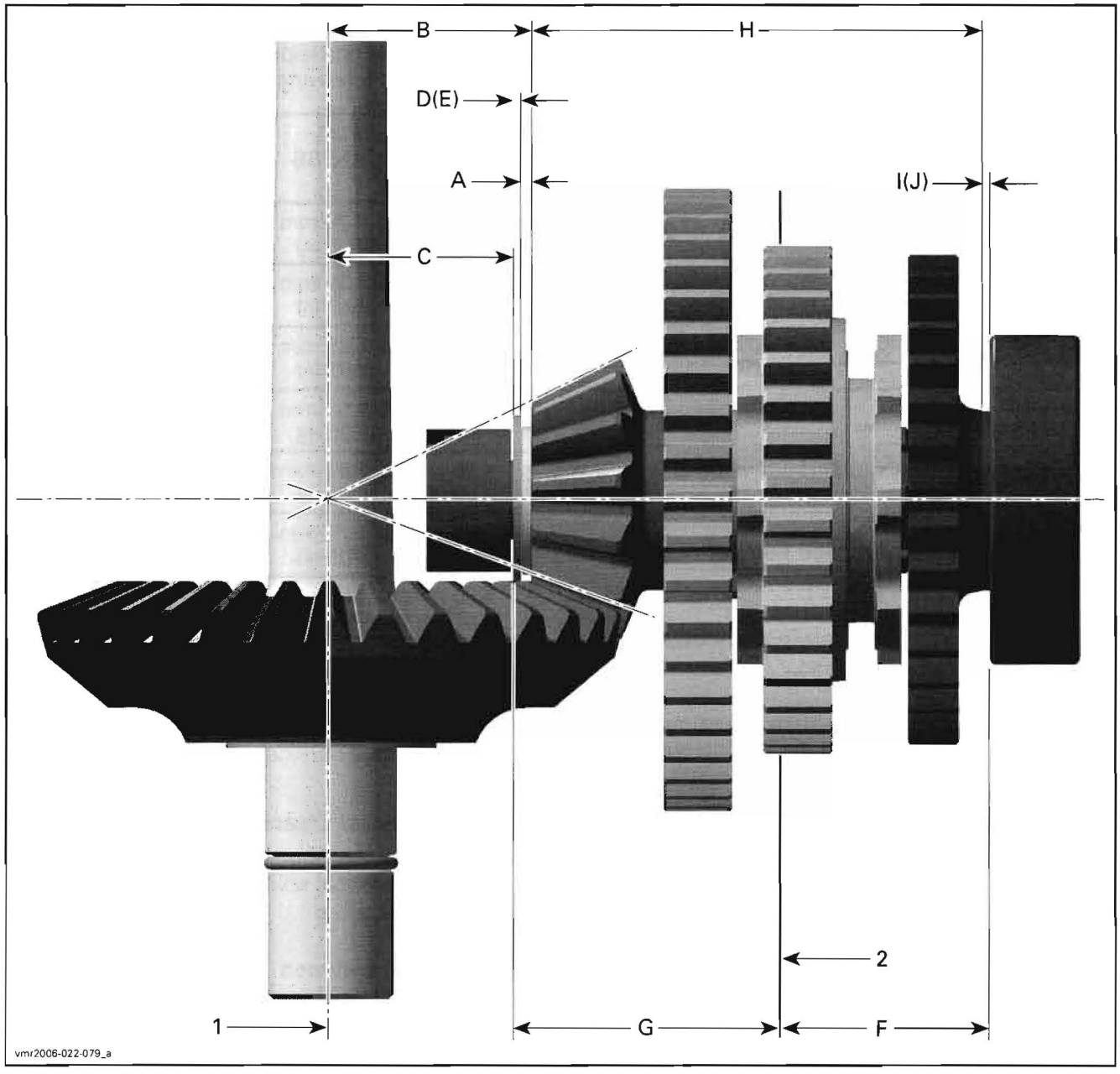

1. Mating surface — output shaft
2. Mating surface — left housing

Bevel Gear Backlash Procedure

Use the following course of calculation to determine the theoretical shim thickness D:

D = B - C - A

B = The distance between the thrust surface of the bevel gear and the theoretical center of its taper. This is defined by manufacturer and is written on the bevel gear shaft.

This bevel gear reference number could be between - 10 and + 10.

www.midwestmanuals.com
Sales@midwestmanuals.com

www.midwestmanuals.com

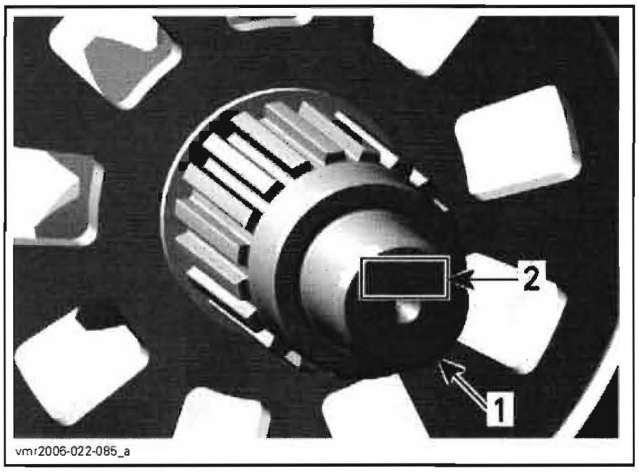

1. Bevel gear
2. Bevel gear reference number

Use following formula to find out value **B**.

$$B = \left(\frac{\text{Bevel gear reference number}}{100}\right) + 37.8$$

For example: bevel gear reference number = - 3.

B = (- 3/100) + 37.8 = 37.77

C = Distance between the shim thrust surface in the center housing and the mating surface to left housing.

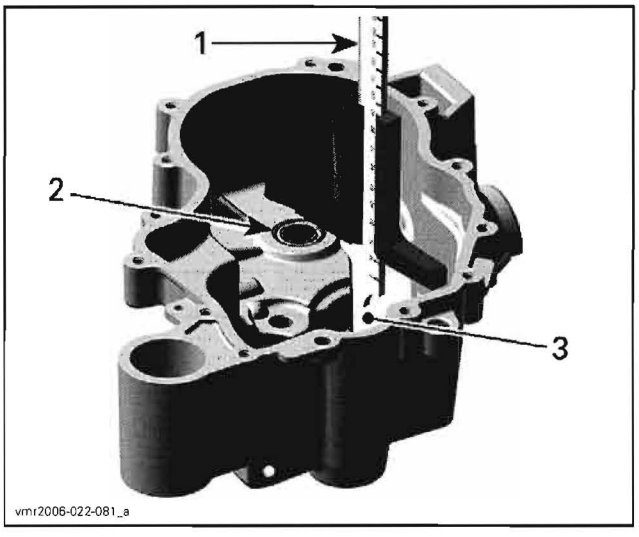

1. Deep gauge — measurement C
2. Shim surface in center housing
3. Mating surface to left housing

A = 2 mm (.0787 in) nominal thickness of axial needle bearing **no. 12**.

When the measurements are taken, calculate the theoretical shim thickness **D** using the formula (**D** = B - C - A).

Take the obtained theoretical shim thickness **D** and choose the corresponding shim number **E** according to the following table.

THEORETICAL SHIM THICKNESS **D**	SHIM NUMBER **E**
1.20 mm to 1.29 mm (.0472 to .0508 in)	120
1.30 mm to 1.39 mm (.0512 to .0547 in)	130
1.40 mm to 1.49 mm (.0551 to .0587 in)	140
1.50 mm to 1.59 mm (.0591 to .0626 in)	150
1.60 mm to 1.69 mm (.0630 to .0665 in)	160
1.70 mm to 1.79 mm (.0669 to .0705 in)	170
1.80 mm to 1.89 mm (.0709 to .0744 in)	180

NOTE: For example, if the theoretical shim thickness **D** is 1.53 mm (.0602 in), choose the corresponding shim number 150 **E**. The shim number 150 represents a nominal value equal to 1.50 mm (.0591 in).

Bevel Gear Axial Clearance Procedure

Use the following course of calculation to determine the theoretical shim thickness **I**:

I = F + G - H - A - E

F = Distance between mating surface of left housing to ball bearing inner race.

www.midwestmanuals.com
Sales@midwestmanuals.com

www.midwestmanuals.com

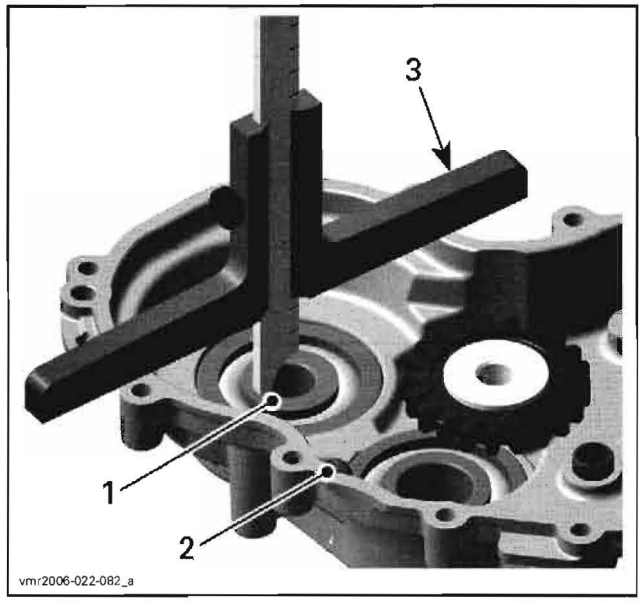

1. *Ball bearing inner race*
2. *Mating surface of left housing*
3. *Depth gauge*

G = Distance between mating surface of center housing and shim surface.

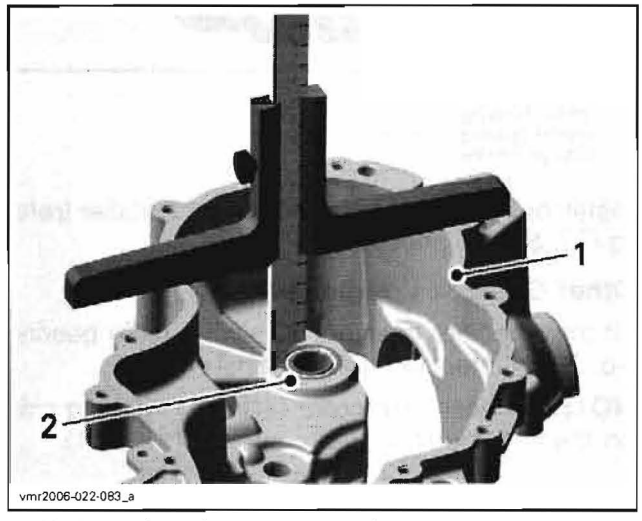

1. *Mating surface of center gear housing*
2. *Shim surface*

H = Distance between thrust surfaces of bevel gear shaft.

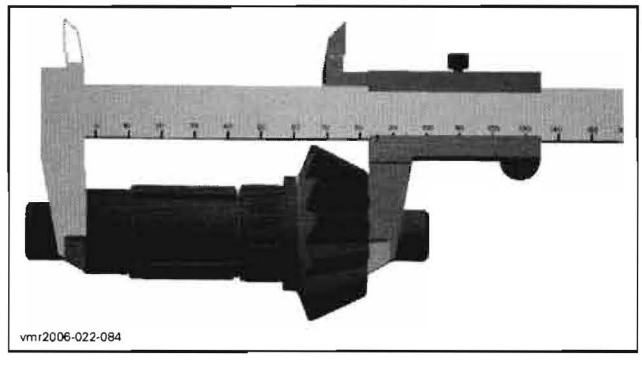

A = 2 mm (.0787 in) nominal thickness of axial needle bearing **no. 12**.

E = The shim number nominal value as found in the *BEVEL GEAR BACKLASH PROCEDURE*. For example, shim number 150 represents a value of 1.50 mm (.0591 in).

When the measurements are taken, calculate the theoretical shim thickness I using the formula (I = F + G - H - A - E).

Take the obtained theoretical shim thickness I and choose the corresponding shim number J according to the following table.

THEORETICAL SHIM THICKNESS I	SHIM NUMBER J
1.22 mm to 1.31 mm (.0480 to .0516 in)	120
1.32 mm to 1.41 mm (.0519 to .0555 in)	130
1.42 mm to 1.51 mm (.0559 to .0594 in)	140
1.52 mm to 1.61 mm (.0598 to .0634 in)	150
1.62 mm to 1.71 mm (.0638 to .0673 in)	160
1.72 mm to 1.81 mm (0.677 to .0713 in)	170
1.82 mm to 1.91 mm (0.717 to .0752 in)	180

For example, if the theoretical shim thickness I is 1.53 mm (.0602 in), choose the corresponding shim number 150 J.

Bevel gear axial clearance of 0.02 to 0.11 mm (.00079 to .00433 in) is included in the above table.

Assembly

The assembly of gearbox is essentially the reverse of disassembly procedure. However, pay attention to the following details.

Bearing Installation in Housing

Unless otherwise instructed, never use hammer to install ball bearings or needle bearings. Use press machine only.

If necessary heat housings up to 100°C (212°F) before installing ball bearings or needle bearings.

www.midwestmanuals.com
Sales@midwestmanuals.com

www.midwestmanuals.com

⚠ WARNING

Clean oil, outside and inside, from housing before heating.

Place new bearing in freezer for 10 minutes before installation.

Use a suitable installer for installing ball bearings of countershaft and bevel gear.

NOTE: Place gearbox housings on a wood stand before installing bearings **no. 34** and **no. 36**.

Install countershaft needle bearing **no. 33** with the main shaft needle bearing installer (P/N 529 035 762) and the installer handle (P/N 420 877 650) in right housing.

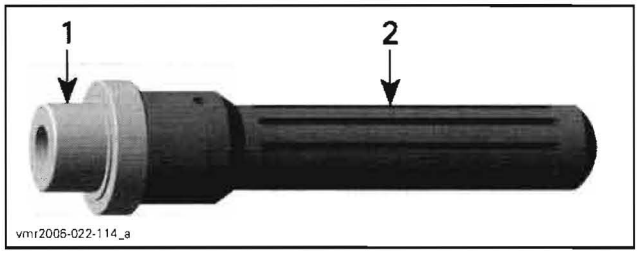

1. Needle bearing installer
2. Installer handle

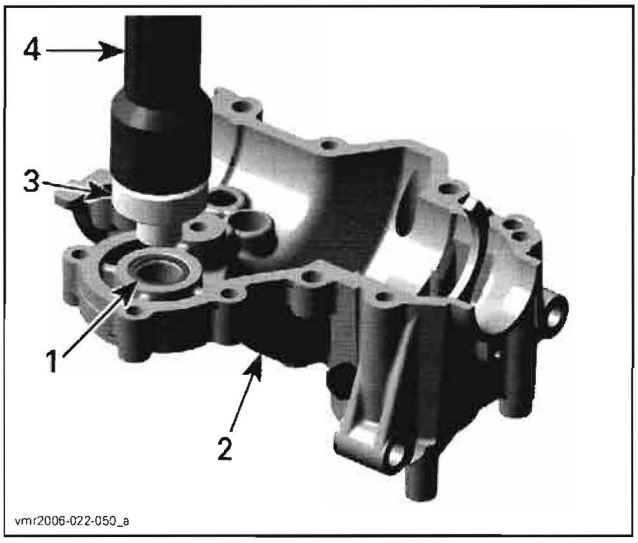

1. Countershaft needle bearing
2. Right housing
3. Needle bearing installer
4. Installer handle

Install bevel gear needle bearing **no. 35** using the bevel gear needle bearing installer (P/N 529 035 763) and the installer handle (P/N 420 877 650).

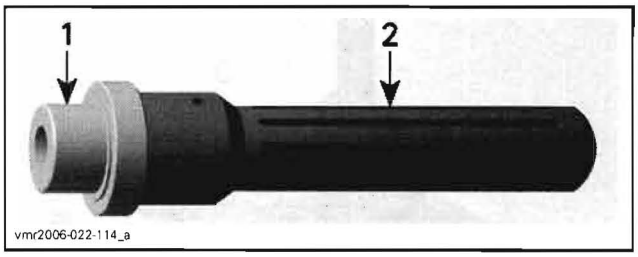

1. Needle bearing installer
2. Installer handle

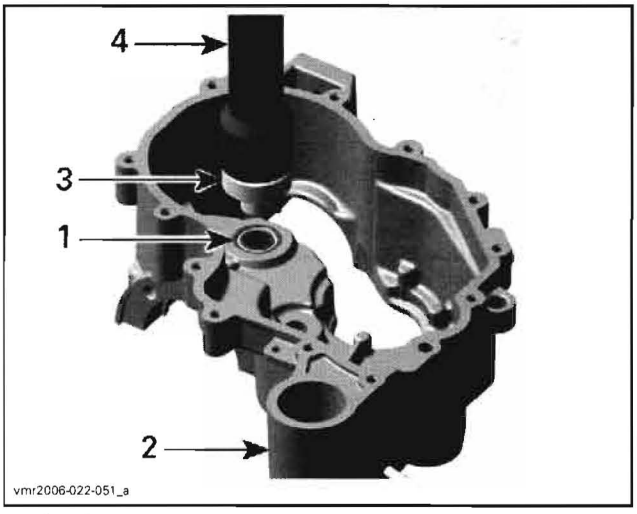

1. Bevel gear needle bearing
2. Center housing
3. Needle bearing installer
4. Installer handle

Install new oil seals with the proper installer (refer to *OIL SEALS* above).

Other Gearbox Components

Fit intermediate gear **no. 23** with needle bearing **no. 22** on intermediate gear shaft **no. 21**.

NOTE: Fit gear with collar facing to housing side on the intermediate shaft.

www.midwestmanuals.com
Sales@midwestmanuals.com

www.midwestmanuals.com

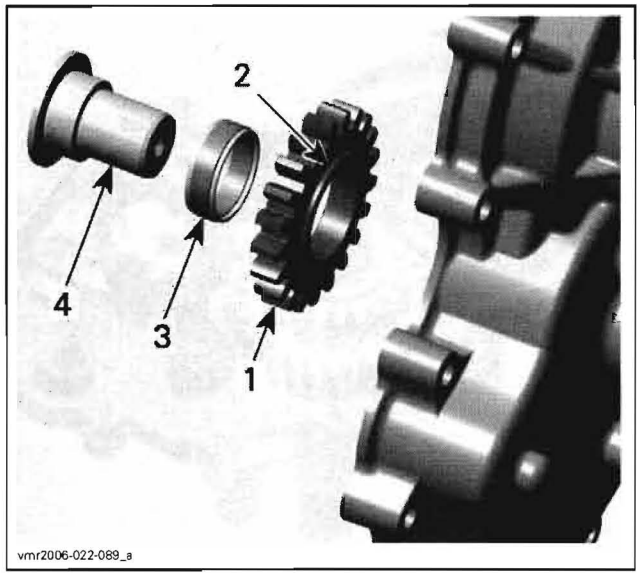

1. *Intermediate gear*
2. *Collar facing housing*
3. *Needle bearing*
4. *Intermediate gear shaft*

Press intermediate gear shaft in the left housing.

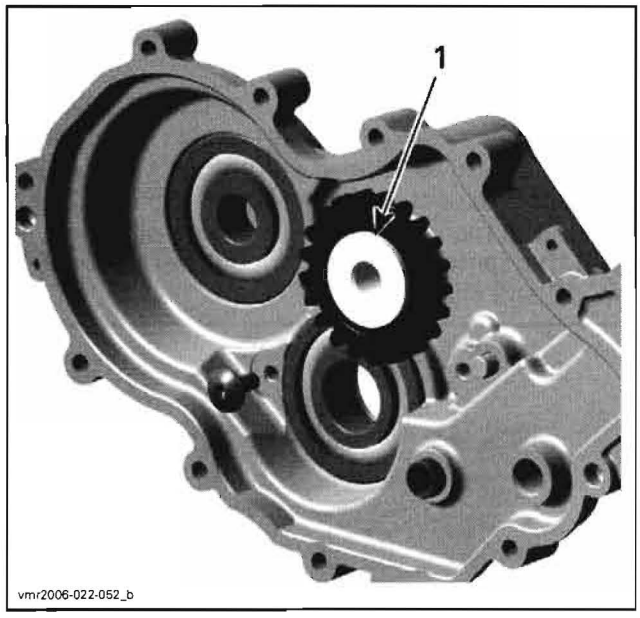

1. *Intermediate gear shaft*

Fit support flange **no. 37** in the left housing and install index lever.

NOTE: Fit step ring into index lever.

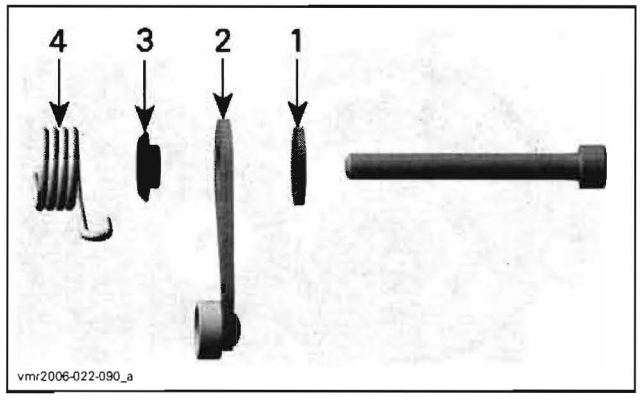

1. *Washer*
2. *Index lever*
3. *Step ring*
4. *Index spring*

Install parking lock lever, teeth showing to countershaft.

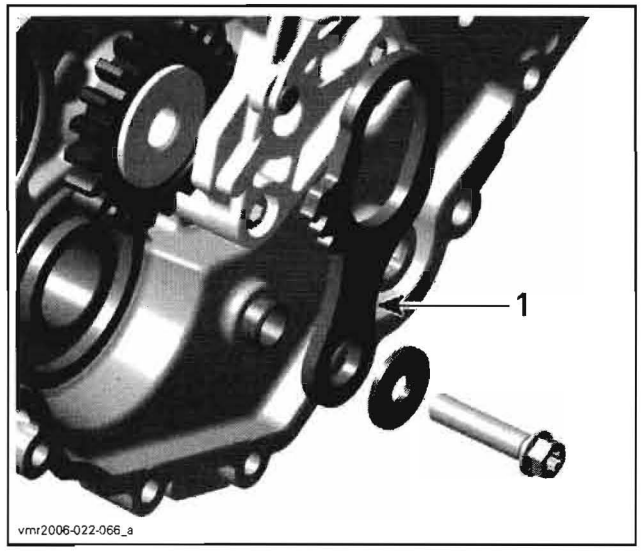

1. *Parking lock lever*

Place shim of CVT side on bearing.

www.midwestmanuals.com
Sales@midwestmanuals.com

www.midwestmanuals.com

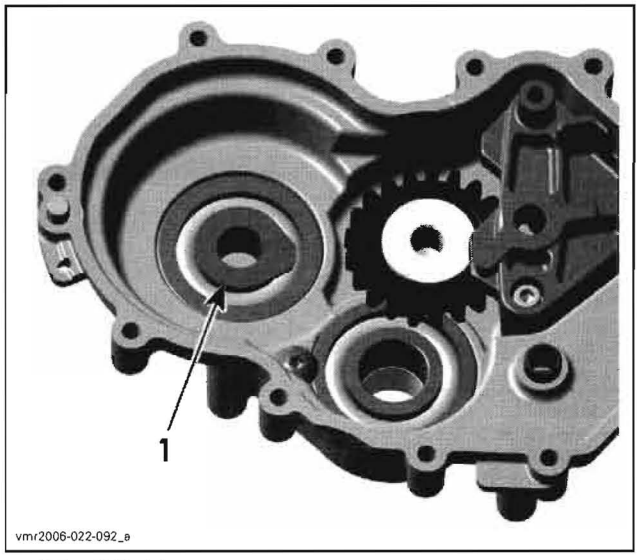

1. Shim CVT side

Place reverse gear with needle bearing and thrust washer.

NOTE: Check if the screw to secure countershaft bearing is installed.

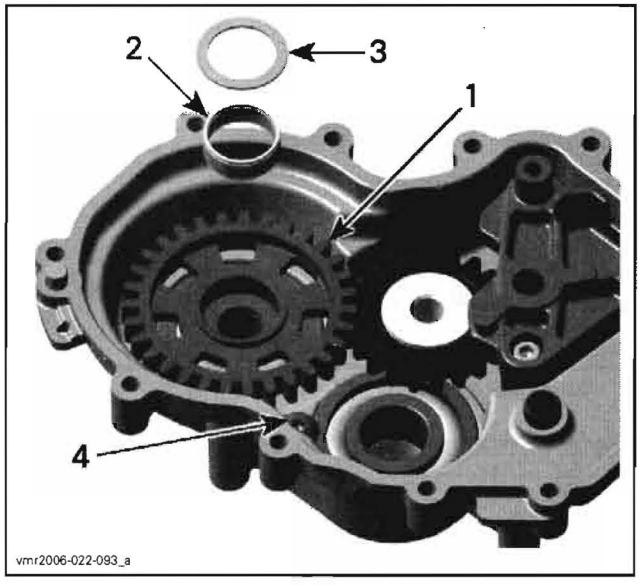

1. Reverse gear
2. Needle bearing
3. Thrust washer
4. Countershaft bearing screw

Install countershaft with low gear and high gear assembly.

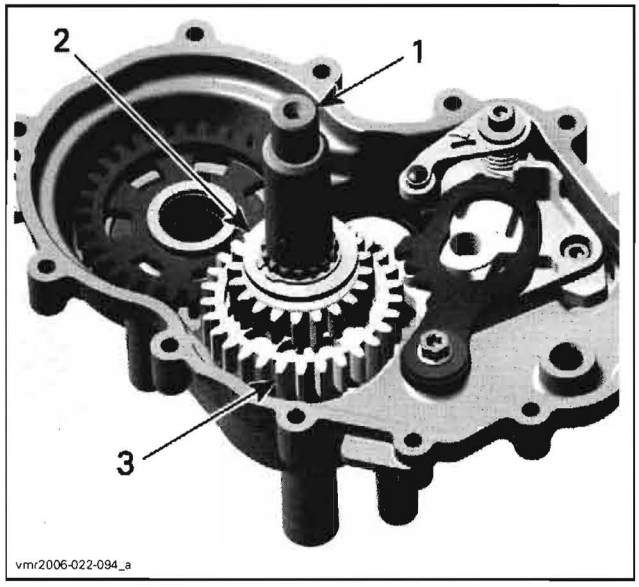

1. Countershaft
2. Low gear
3. High gear

Install a new shim **no. 17** onto bevel gear shaft, fork side.

Install bevel gear with sliding gear assembly together with shift fork.

NOTE: If a new bevel gear and output shaft are used, it is necessary to verify the shim adjustment prior to finalize assembly. Refer to *ADJUSTMENT* above in this section. If the existing bevel gear is used, it is mandatory to use a new shim **no. 17** with the same thickness, a new needle bearing **no. 12** and shim **no. 13**.

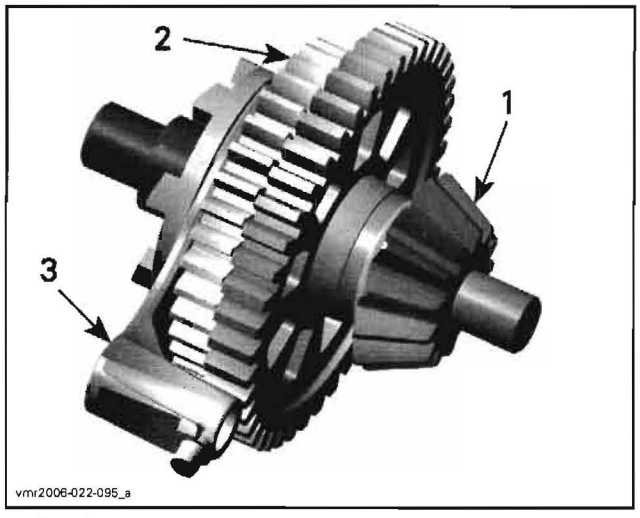

1. Bevel gear
2. Sliding gear
3. Shift fork

Install a new needle bearing and shim.

www.midwestmanuals.com
Sales@midwestmanuals.com

www.midwestmanuals.com

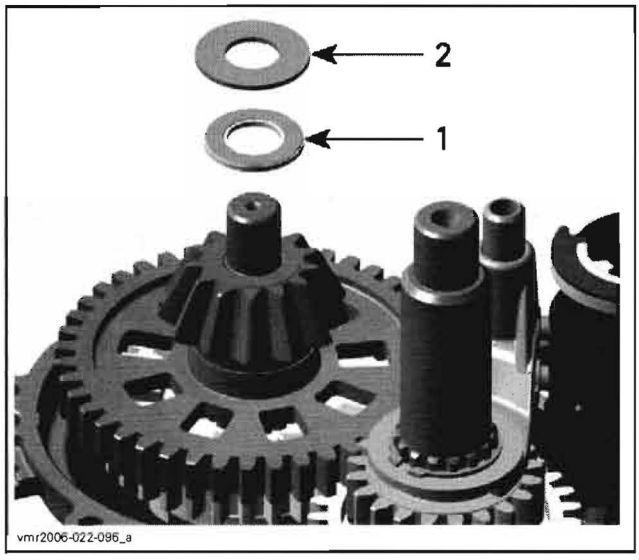

1. *Needle bearing*
2. *Shim*

Insert a flat screwdriver in the slot of the index lever, turn screwdriver clockwise and install shift drum on neutral position as per following illustration.

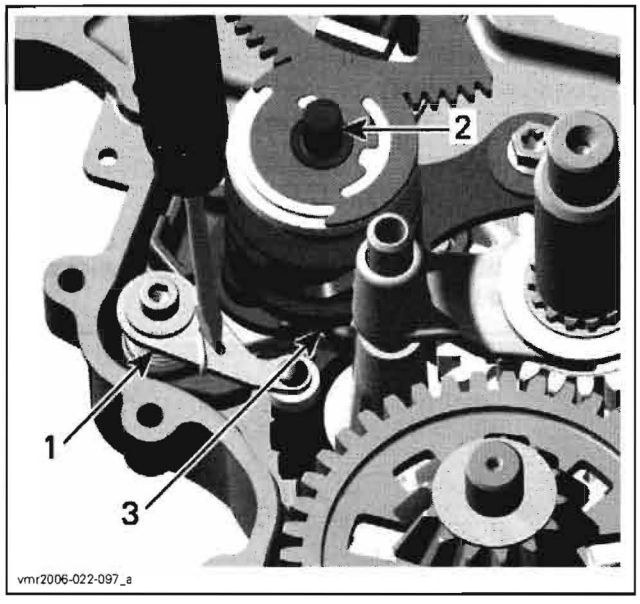

1. *Index lever*
2. *Shift drum*
3. *Neutral position*

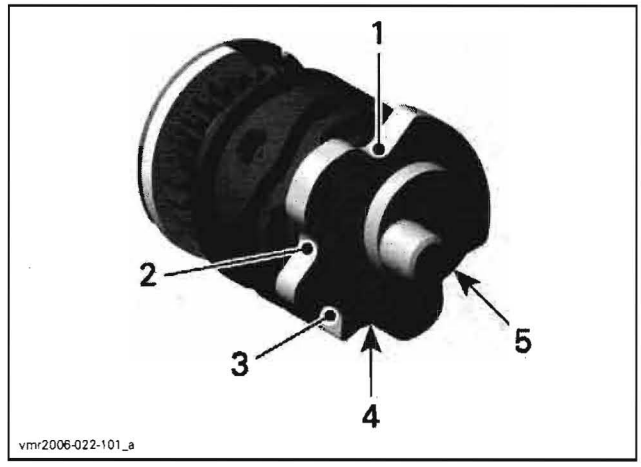

1. *Parking stop location*
2. *Reverse stop location*
3. *Neutral stop location*
4. *High gear stop location*
5. *Low gear stop location*

Install shift shaft assembly.

NOTE: Marks on shift drum/isolating washer and shift shaft must align.

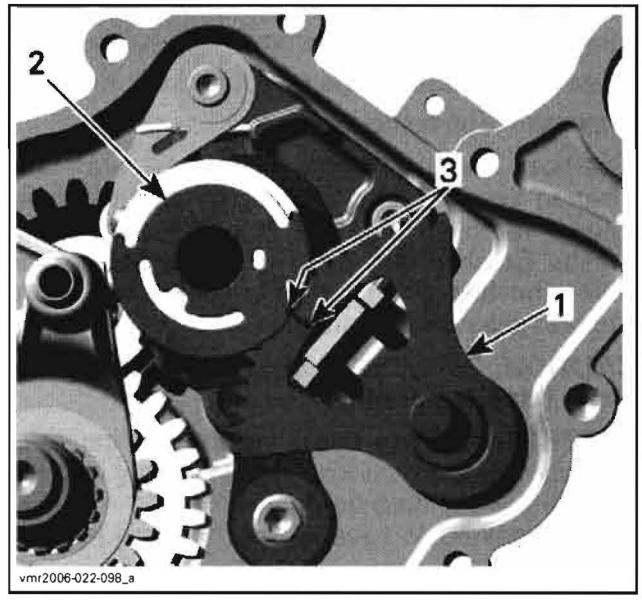

1. *Shift shaft assembly*
2. *Isolating washer*
3. *Marks*

Install shift fork **no. 25** then engage both shift fork pins in their corresponding groove on the shift drum.

NOTE: Move sliding gears to facilitate engagement of pins inside grooves.

www.midwestmanuals.com
Sales@midwestmanuals.com

www.midwestmanuals.com

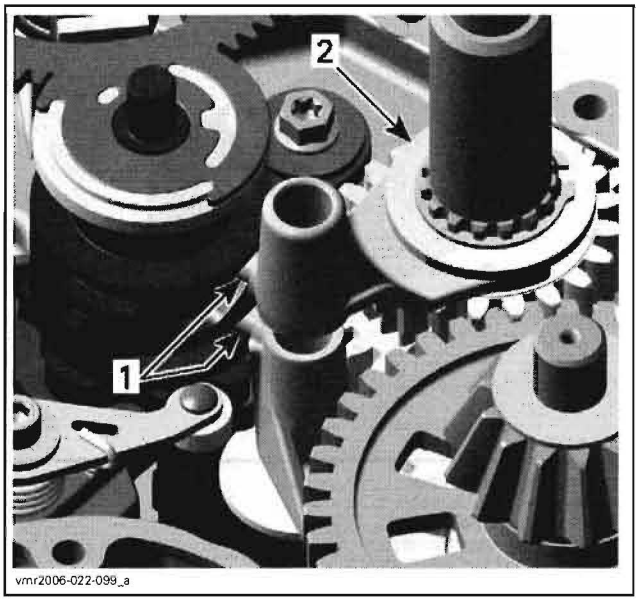

1. Shift fork pins
2. Sliding gear

Install shift fork shaft **no. 24**.

NOTE: Run all gears as a final function check before installing center housing.

Now, close the housings by doing the following:

Clean all metal components in a solvent.

Gearbox housing mating surfaces are best cleaned using a combination of Loctite chisel (gasket remover) (P/N 413 708 500) and a brass brush. Brush a first pass in one direction then make the final brushing perpendicularly (90°) to the first pass cross (hatch).

CAUTION: Do not wipe with rags. Use a new clean hand towel only.

IMPORTANT: When beginning the application of the gear housing sealant, the assembly and the first torquing should be done within 10 minutes. It is suggested to have all you need on hand to save time.

Use Loctite 5910 (P/N 293 800 081) on mating surfaces.

Use a plexiglass plate and apply some sealant on it. Use a soft rubber roller (50 - 75 mm (2 - 3 in)), available in arts products suppliers for printing, and roll the sealant to get a thin uniform coat on the plate (spread as necessary). When ready, apply the sealant on gear housing mating surfaces.

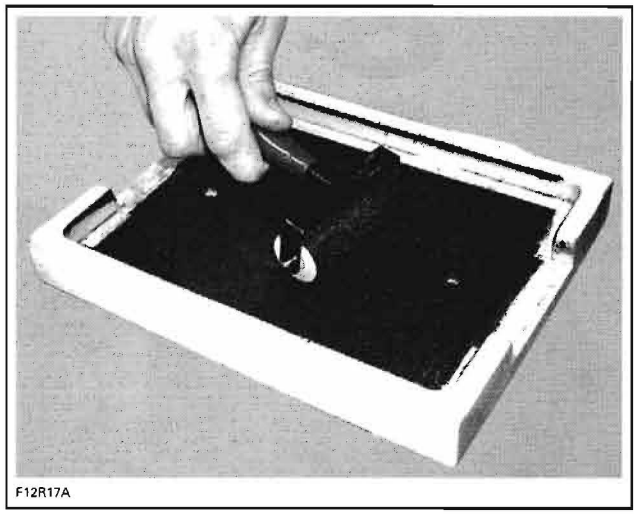

Do not apply in excess as it will spread out inside gear housing.

NOTE: It is recommended to apply this specific sealant as described here to get a uniform application without lumps. If you do not use the roller method, you may use your finger to uniformly distribute the sealant (using a finger will not affect the adhesion).

Hand-torqued gear housing screws in a crisscross sequence. Repeat procedure, retightening all screws to 10 N•m (89 lbf•**in**).

Install O-ring **no. 31** including distance sleeve **no. 32** on countershaft CVT side.

CAUTION: Place O-ring including distance sleeve right away. Chamfered bore of distance sleeve has to face the gearbox.

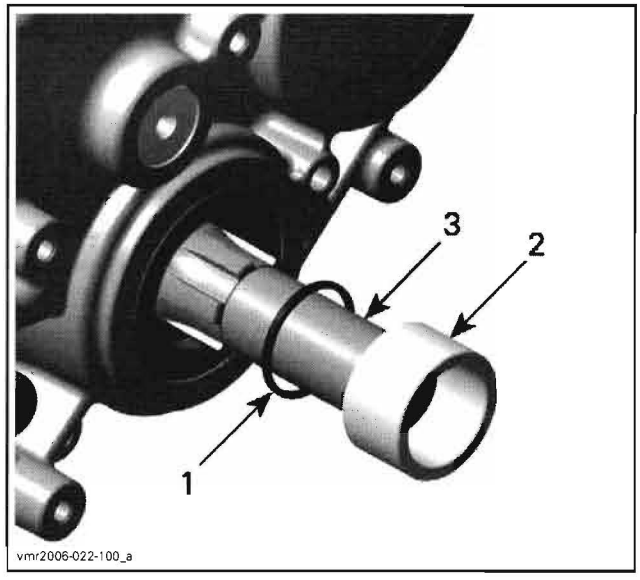

COUNTERSHAFT END CVT SIDE
1. O-ring
2. Distance sleeve
3. Countershaft end CVT side

www.midwestmanuals.com
Sales@midwestmanuals.com

www.midwestmanuals.com

Refer to *OUTPUT SHAFT AND COUPLING MECHANISM* to install these components. Measure the output shaft backlash.

Installation

The installation is the reverse of the removal procedure.

www.midwestmanuals.com
Sales@midwestmanuals.com



sales@midwestmanuals.com
www.midwestmanuals.com

www.midwestmanuals.com

SHIFTER

SERVICE PRODUCTS

Description	Part Number	Page
Loctite 243 (blue)	293 800 060	169

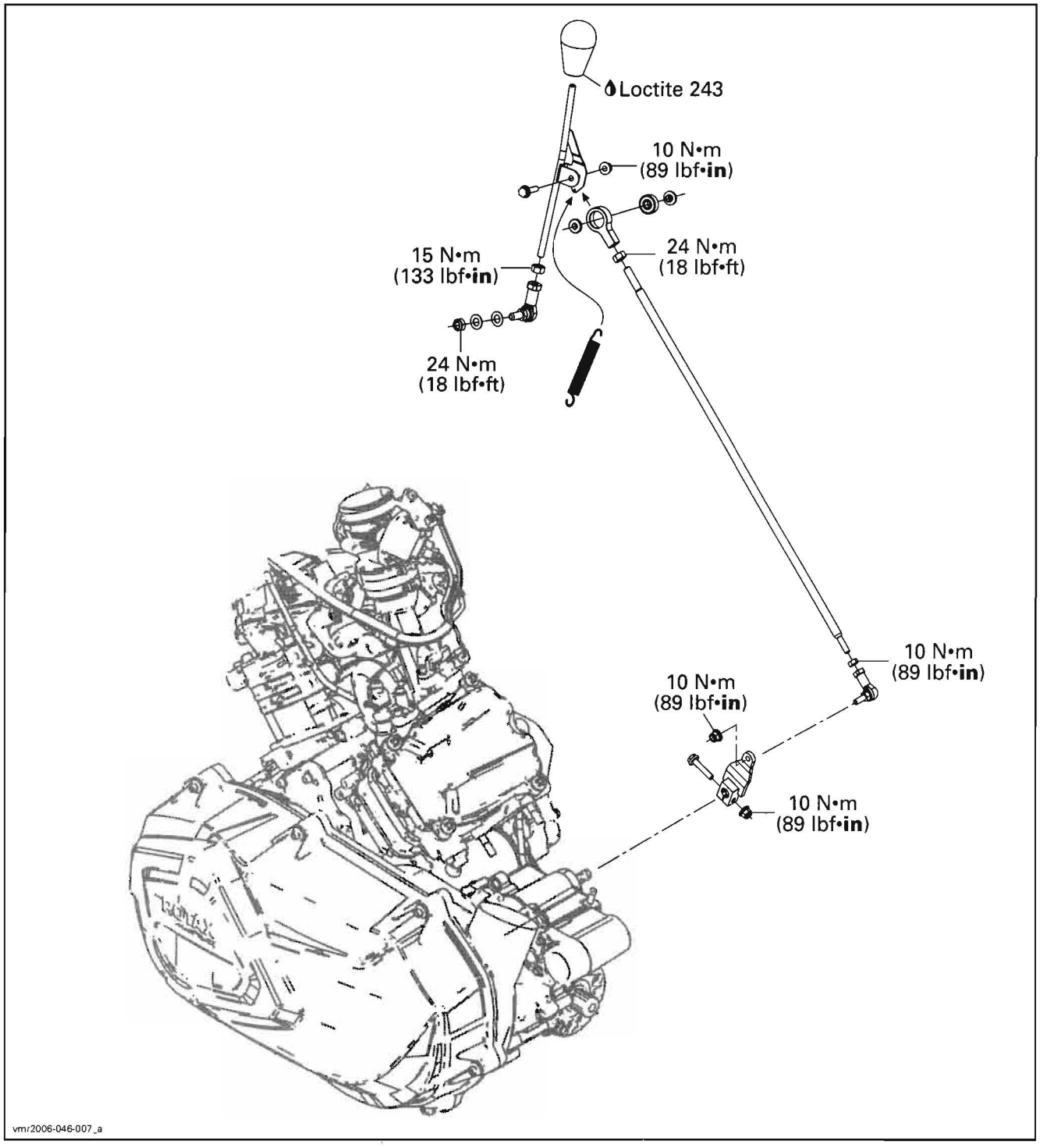

www.midwestmanuals.com
Sales@midwestmanuals.com

www.midwestmanuals.com

GENERAL

Before performing any servicing on the transmission linkage system, be sure the transmission lever is on NEUTRAL position and the parking brake is applied.

During assembly/installation, use the torque values and services products as in the exploded view.

Clean threads before applying a threadlocker. Refer to *SELF-LOCKING FASTENERS* and *LOCTITE APPLICATION* at the beginning of this manual for complete procedure.

⚠ WARNING

Torque wrench tightening specifications must strictly be adhered to.
Locking devices (e.g.: locking tabs, elastic stop nuts, self-locking fasteners, cotter pins, etc.) must be replaced with a new one.

PROCEDURES

TRANSMISSION LEVER

Shifter Lever Removal

To remove the transmission lever, do the following:

- Place transmission lever in NEUTRAL position.
- Apply parking brake.
- Unscrew the transmission lever handle.

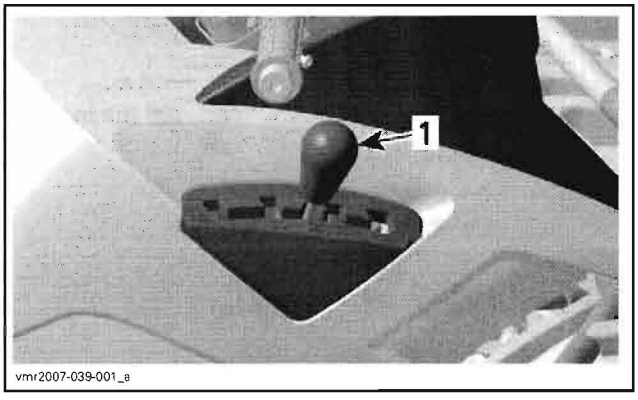

1. Transmission lever handle

- Remove the RH side panel and the console. Refer to *BODY*.
- Detach tension spring from bracket.

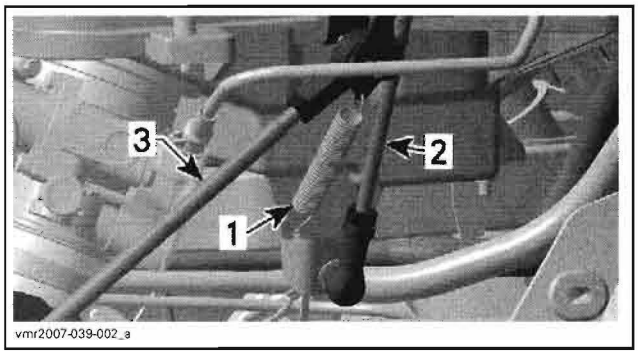

1. Tension spring
2. Transmission lever
3. Link rod

- Detach tie-rod end from bracket.

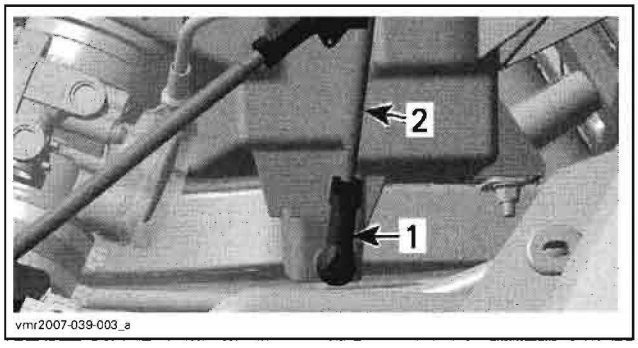

1. Tie-rod end
2. Transmission lever

- Unscrew link rod bolt.

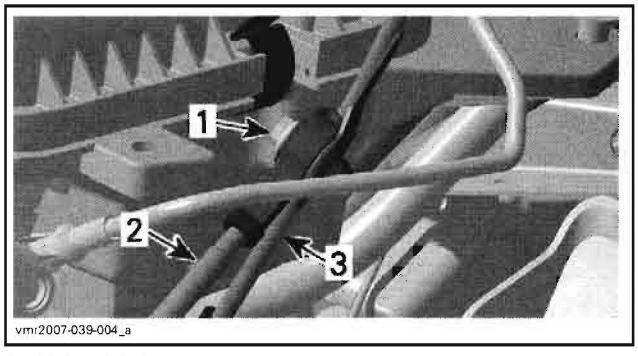

1. Link rod bolt
2. Link rod
3. Transmission lever

Pull link rod out of transmission lever bracket, pay attention not to loose bushings located each side of link rod anchor.

www.midwestmanuals.com
Sales@midwestmanuals.com

www.midwestmanuals.com

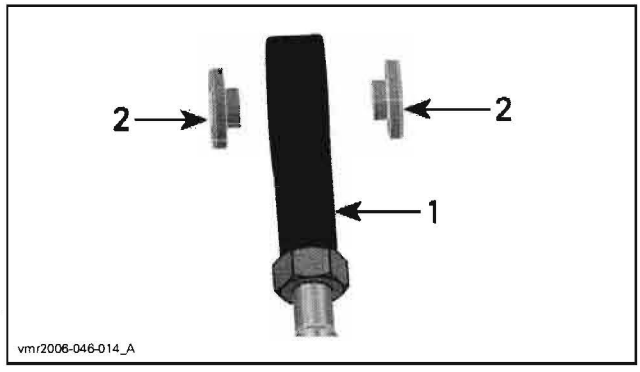

1. Link rod anchor
2. Bushings

Shifter Lever Inspection

Check the transmission lever for bending or cracks.

Check the tie-rod at the end of lever.

Replace the lever or the tie-rod if necessary.

Shifter Lever Installation

The installation is the reverse of the removal procedure. However, pay attention to the following.

Place a washer on both sides of bracket when installing tie-rod end on bracket.

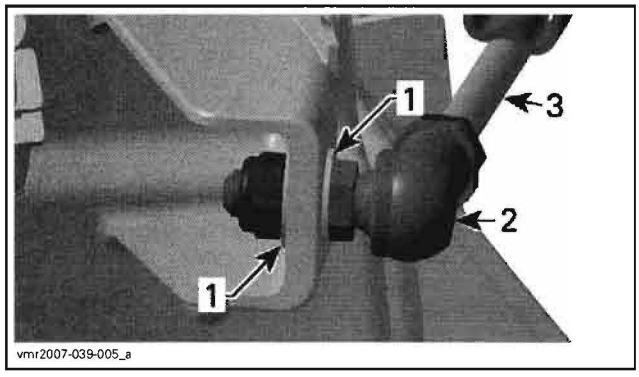

1. Washers
2. Tie-rod end
3. Transmission lever

Apply Loctite 243 (blue) (P/N 293 800 060) on transmission lever threads before installing the handle.

If the tie-rod end replacement is necessary, use the following illustration to position the tie-rod properly.

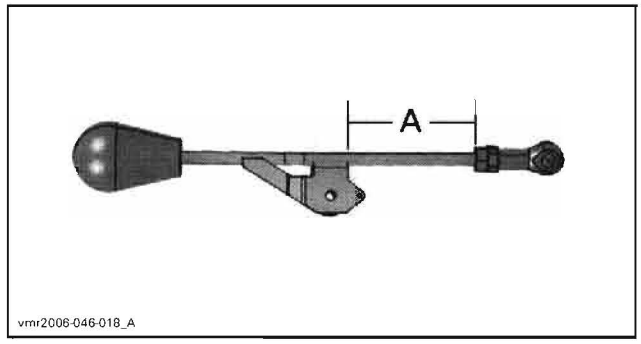

A. 82 mm ± 1 mm (3.228 in ± .039 in)

LINK ROD

Link Rod Removal

Remove RH side panel and rear engine cover.

Remove link rod from shifting plate.

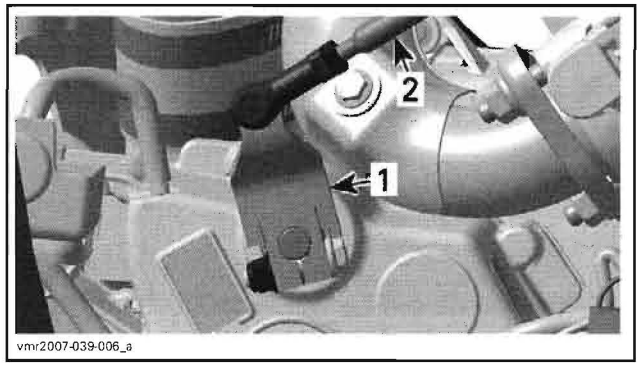

1. Shifting plate
2. Link rod

At the other end of link rod, unscrew link rod bolt.

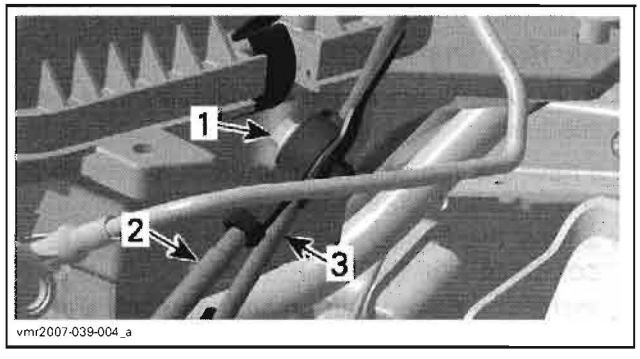

1. Link rod bolt
2. Link rod
3. Transmission lever

Pull link rod out of transmission lever bracket, pay attention not to loose bushings located each side of link rod anchor.

www.midwestmanuals.com
Sales@midwestmanuals.com

www.midwestmanuals.com

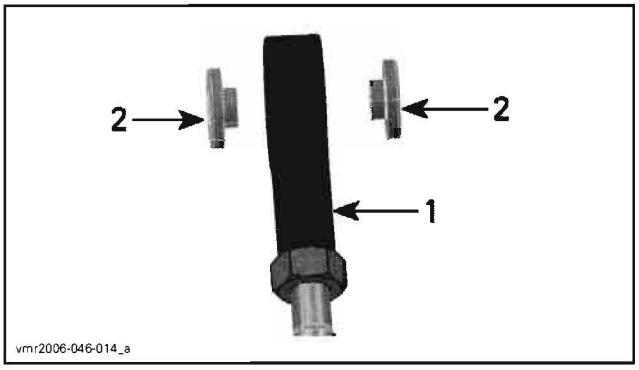

1. *Link rod anchor*
2. *Bushings*

Link Rod Inspection

Check link rod for bending or cracks.

Check ball bearing in link rod anchor. The bearing should turn smoothly and freely.

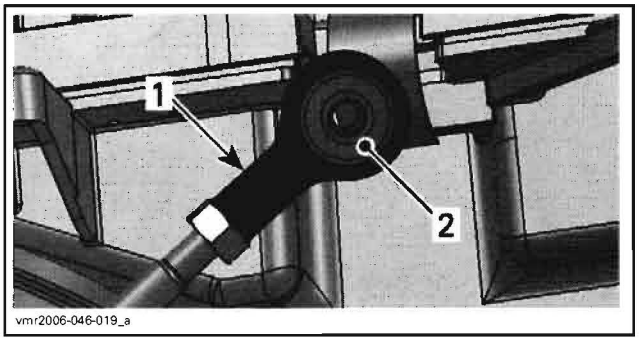

1. *Link rod anchor*
2. *Ball bearing*

Check tie-rod end for wear and excessive play.

Replace all defective parts.

Link Rod Installation

If no new parts are installed, reverse the removal procedure.

If a new link rod, link rod anchor or a new tie-rod end is installed, do the following:

- Screw the tie-rod end and the link rod anchor completely on the link rod.
- Install the tie-rod end on shifting plate and link rod anchor on transmission lever.
- Be sure gearbox is engaged on NEUTRAL position.
- Turn link rod until the transmission lever is located in the middle of the NEUTRAL slot.

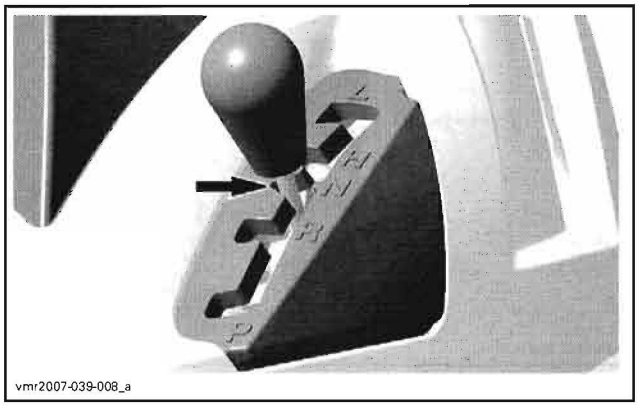

- Torque jam nuts, one on both ends of link rod.
- Verify if the transmission lever moves into the PARK and LOW slots. If not, the gearbox was not engaged on NEUTRAL. Place gearbox on NEUTRAL position and redo the procedure.
- Install removed parts and test drive to confirm all is working well.

SHIFTING PLATE

Shifting Plate Removal

NOTE: Do not remove shifting plate needlessly.

Remove link rod from shifting plate.

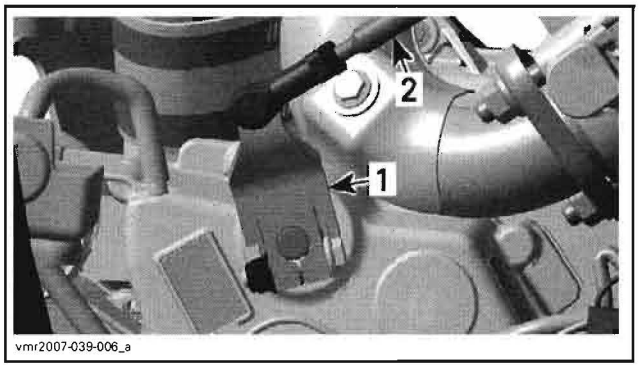

1. *Shifting plate*
2. *Link rod*

NOTE: Mark the location of shifting plate before removing it from shift shaft.

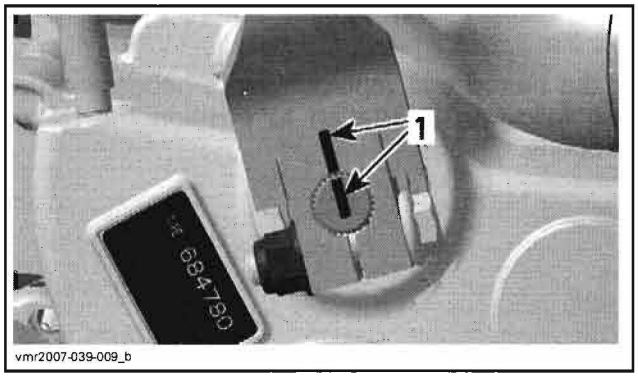

1. *Mark both parts position*

www.midwestmanuals.com
Sales@midwestmanuals.com

www.midwestmanuals.com

Remove shifting plate bolt.

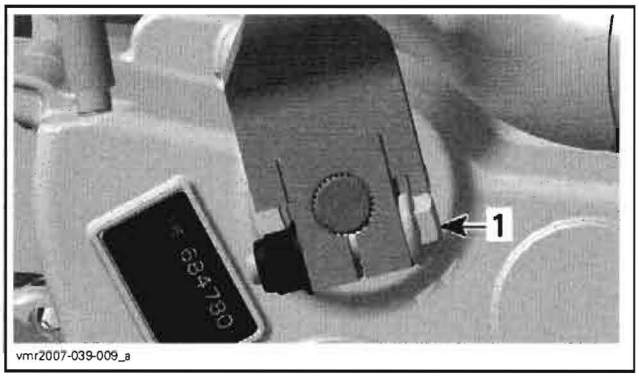

1. Shifting plate bolt

Shifting Plate Inspection

Check shifting plate for cracks, bending or other damages. Replace if necessary.

Shifting Plate Installation

The installation is the reverse of the removal procedure. However, pay attention to the following.

Be sure the gearbox is engaged on NEUTRAL before performing this procedure.

Align shifting plate mark with shift shaft mark. If new parts are used, align shifting plate slot with the shift shaft location without splines.

Install all removed parts and test drive to confirm all is working well.

www.midwestmanuals.com
Sales@midwestmanuals.com

www.midwestmanuals.com

www.midwestmanuals.com
Sales@midwestmanuals.com

www.midwestmanuals.com

OVERVIEW

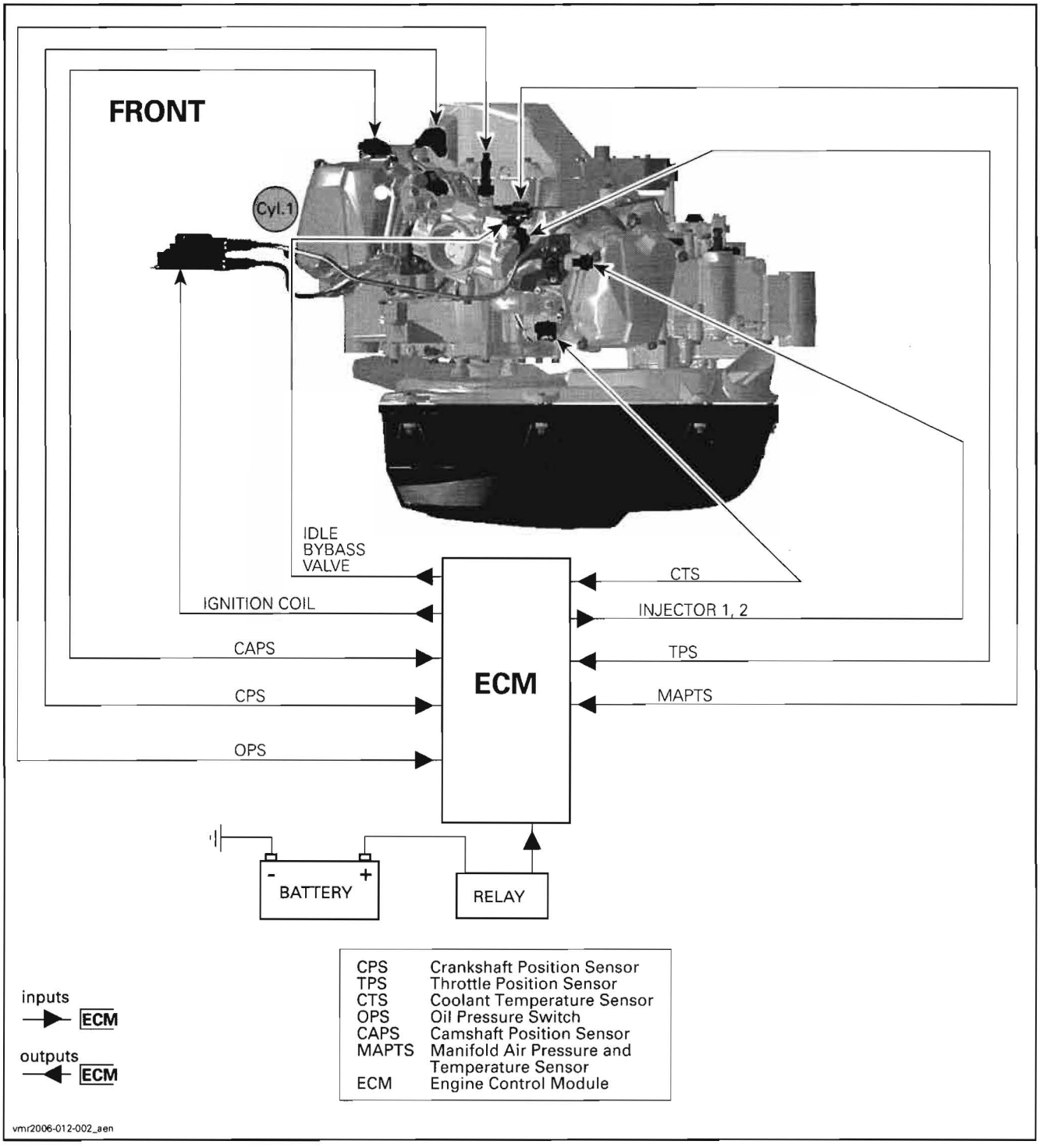

ENGINE MANAGEMENT SYSTEM OVERVIEW

www.midwestmanuals.com
Sales@midwestmanuals.com

www.midwestmanuals.com

OPERATING PRINCIPLE

A highly advanced engine management system (EMS) has been used to ensure a high power output with cleaner combustion.

There are 3 main systems in interaction with the engine management system (EMS):

1. Air induction.
2. Fuel system.
3. Electrical system.

NOTE: The cylinders are referenced as 1 (front) and 2 (rear).

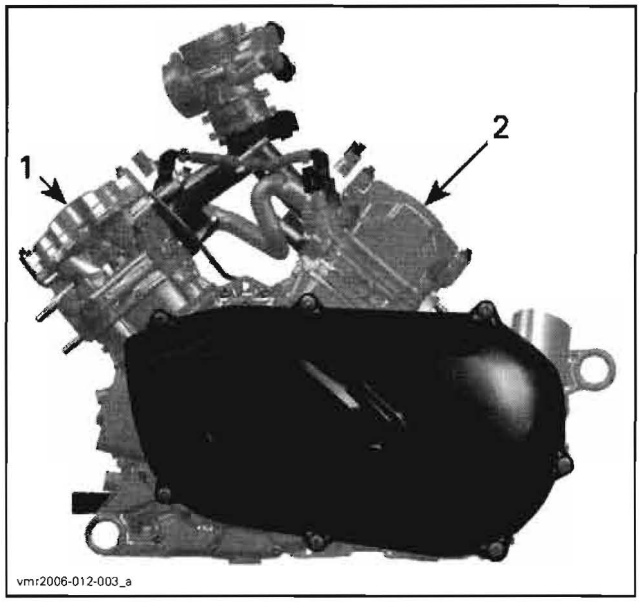

1. Cylinder 1 (front)
2. Cylinder 2 (rear)

AIR INDUCTION

Air flows through air silencer, air filter, throttle body, intake manifold and then goes into combustion chamber.

Throttle Body

The 46 mm throttle body is mounted on top of intake manifold. Fitted on the throttle body, there is the TPS and the idle bypass valve which allows the ECM to control the idle speed while the throttle plate is closed.

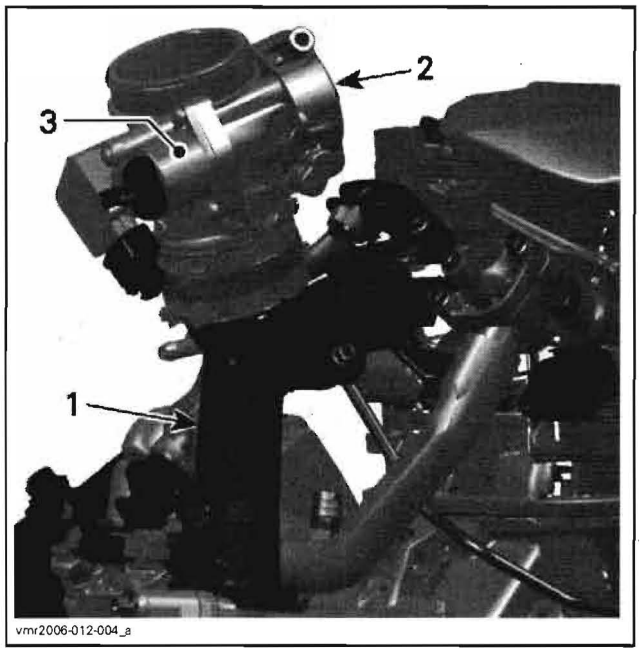

1. Intake manifold
2. Throttle body
3. Idle bypass valve

Intake Manifold

The intake manifold is mounted on the top of the engine on both cylinder heads. It provides support for the throttle body, fuel injectors, the fuel rails and the MAPTS (manifold air pressure and temperature sensor).

The air intake manifold is a resonator between the throttle body and the air intake at the cylinder heads.

FUEL SYSTEM

When the intake valve reaches the correct position, the ECM (engine control module) opens the fuel injector and fuel is discharged into the intake port at the air intake manifold by the high fuel pressure inside the fuel rail. The air/fuel mixture enters then the combustion chamber through the open intake valve. This mixture is then ignited by the spark plug.

www.midwestmanuals.com
Sales@midwestmanuals.com

www.midwestmanuals.com

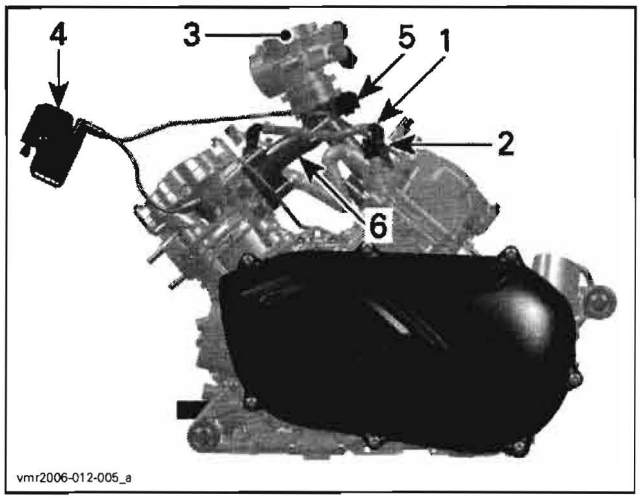

1. *Fuel rail (2)*
2. *Injector (2)*
3. *Throttle body*
4. *Ignition coil*
5. *Manifold air pressure and temperature sensor (MAPTS)*
6. *Intake manifold*

Fuel Rail

Two fuel rails, one for each injector, are mounted on the intake manifold. The fuel rails ensure all the time, that enough fuel can be delivered to the fuel injectors. The fuel rails are fed by the fuel pump with the properly regulated fuel pressure.

Fuel Injector

Two fuel injectors (one per cylinder) are used to inject fuel into the intake port of the cylinder head.

Fuel Pump Module

The fuel pump module is underneath fuel tank. The module includes fuel pump, fuel pressure regulator and fuel level sensor. Refer to *FUEL SYSTEM*.

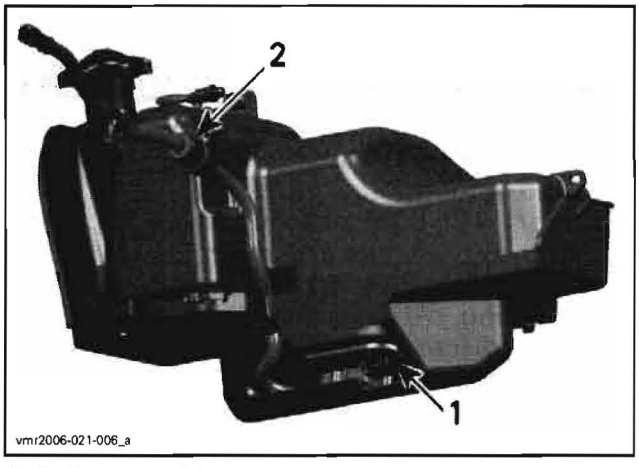

1. *Fuel pump module*
2. *In-line fuel filter*

Fuel Pressure Regulator

A fuel pressure regulator controls the pressure in the system and allows excess fuel to return to the fuel tank. Refer to *FUEL SYSTEM*.

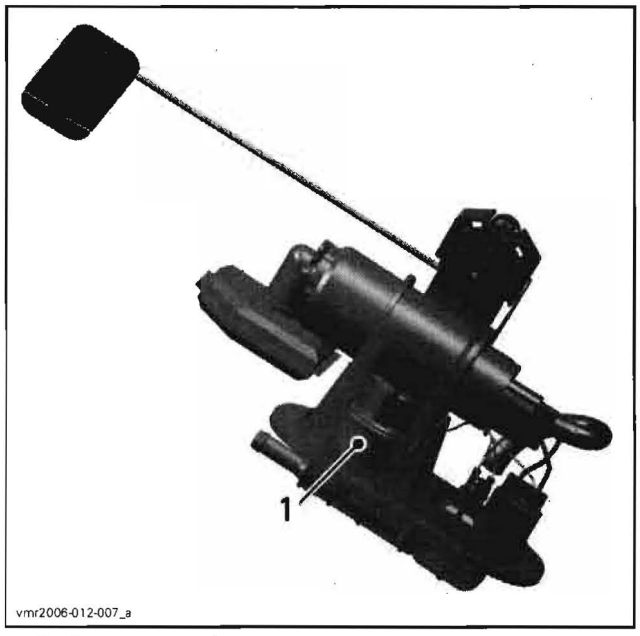

1. *Fuel pressure regulator*

Fuel Filter

The fuel filter is located between engine and fuel tank. Refer to *FUEL SYSTEM*.

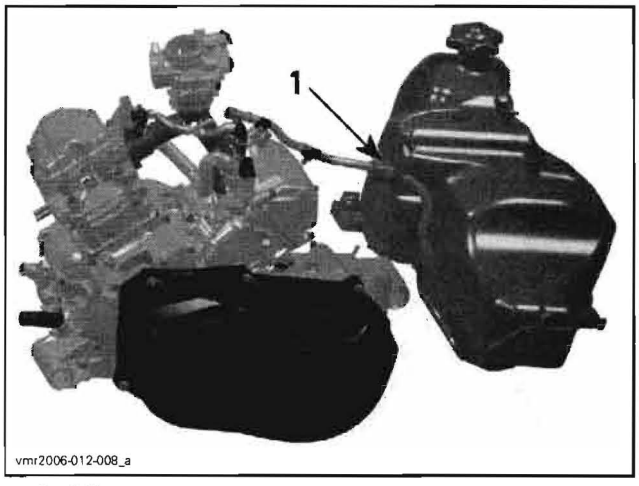

1. *Fuel filter*

www.midwestmanuals.com
Sales@midwestmanuals.com

www.midwestmanuals.com

ELECTRICAL SYSTEM

A communication link (CAN lines) is used to communicate between the ECM and the multifunction speedometer. CAN lines consist of a pair of wires (WHITE/BEIGE and BEIGE/GREEN).

The communication link is also used to communicate with the B.U.D.S. software. Refer to *COMMUNICATION TOOLS AND B.U.D.S. SOFTWARE*.

The speedometer multifunction display can show fault codes. Refer to *EMS DIAGNOSTIC*.

Engine Control Module (ECM)

The ECM controls the electrical system and the engine management functions, by processing the information given by various sensors.

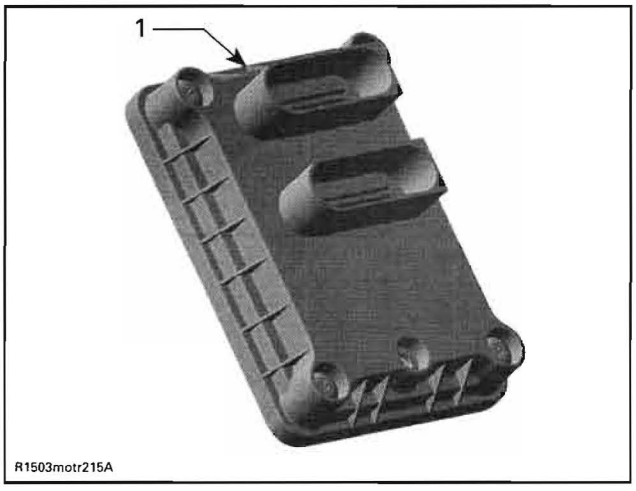

TYPICAL
1. ECM

The ECM is located in front of steering column.

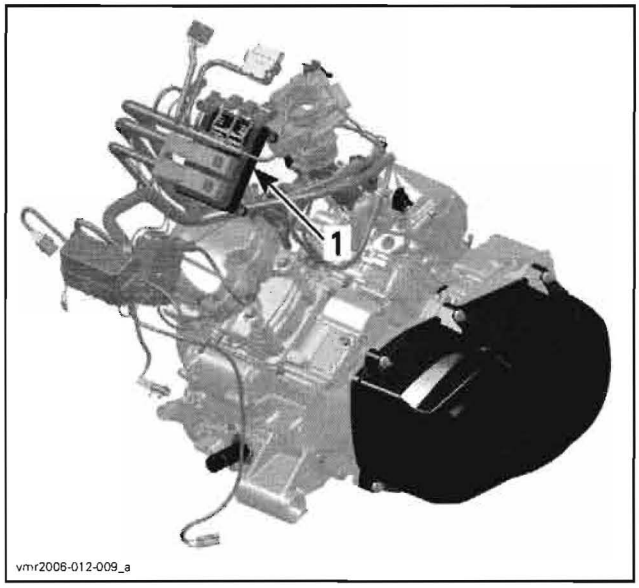

1. ECM location

The ECM features a permanent memory that will keep the programmed ignition key(s) active, fault codes, customer information and other engine information, even when the battery is removed from the vehicle.

The ECM features a self-diagnostic mode when ignition key is turned on. However, some components need the engine to be running so that they can be monitored. Some problems will turn on a warning lamp or will set the engine in limp home mode. Refer to *EMS DIAGNOSTIC* section for more information.

Power Distribution

Three relays are used to distribute power to different components. When ignition key is turned ON and engine run/stop switch is in RUN position, relay 2 is energized and in turn, it supplies the windings of relay 1 and relay 3. The ECM provides the trigger signal to activate each relay individually. Refer to the following diagram.

When starting engine, relay 1 and 3 are temporary disabled to make all power available for the starter, the fuel pump and the EMS.

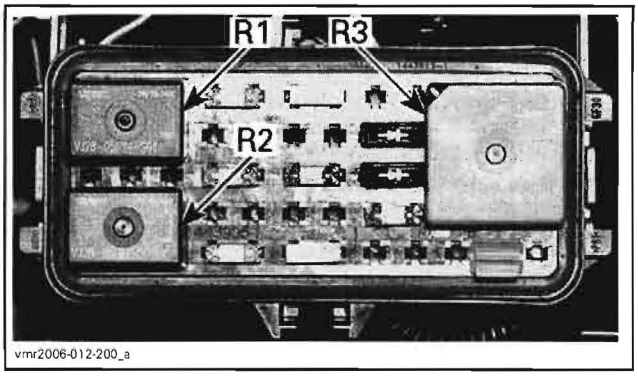

R1: Cooling fan
R2: Main
R3: Accessories

⚠ WARNING

Some components are continuously powered by the VFB when ignition key is turned on and engine run/stop switch is in RUN position. The ECM switches the circuit to the ground to complete the electrical circuits it controls. Take this into account when troubleshooting. Always disconnect the battery prior to disconnecting any electric or electronic parts.

www.midwestmanuals.com
Sales@midwestmanuals.com

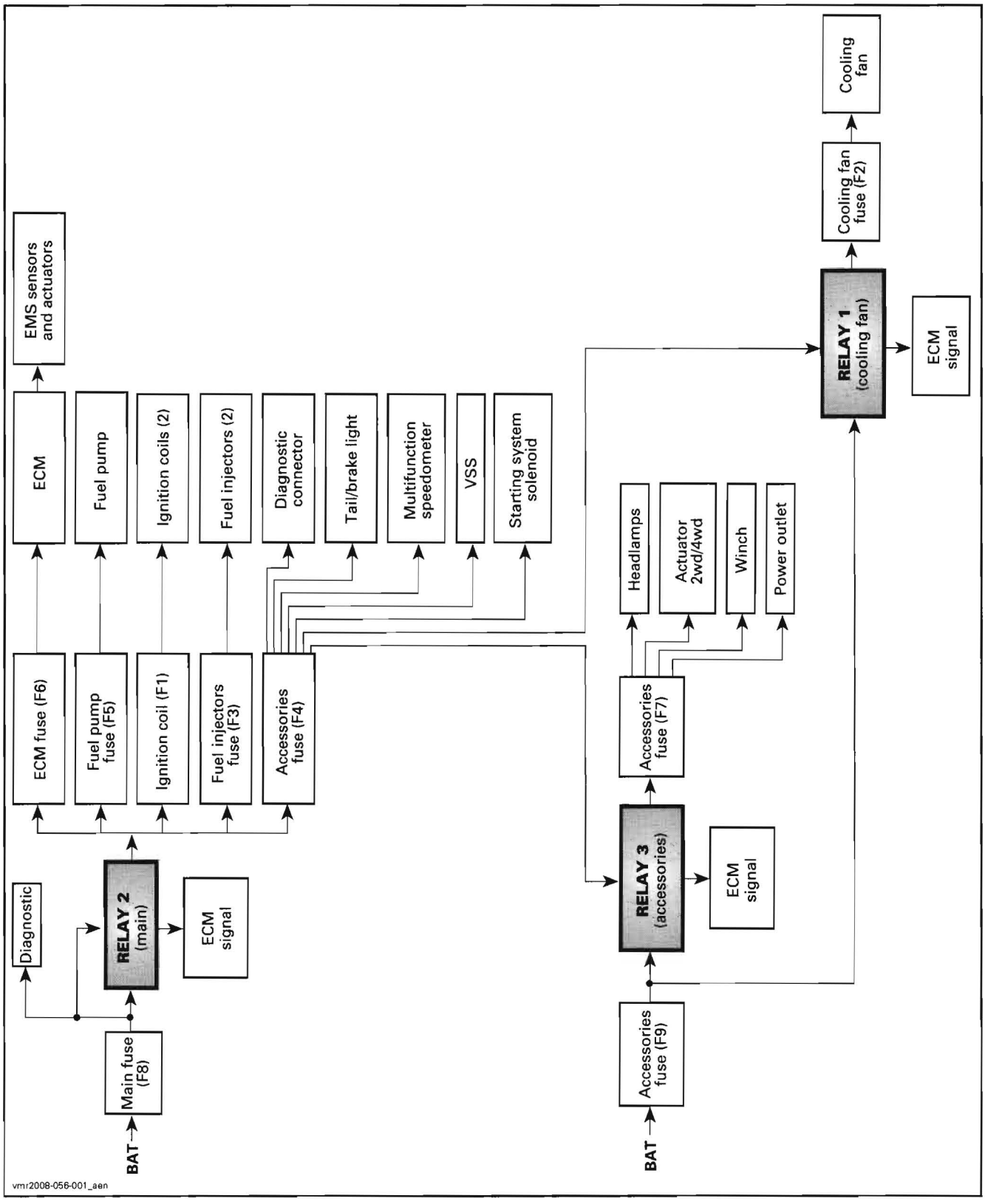

www.midwestmanuals.com
Sales@midwestmanuals.com

www.midwestmanuals.com

ECM and VFB Interaction with the Electrical System

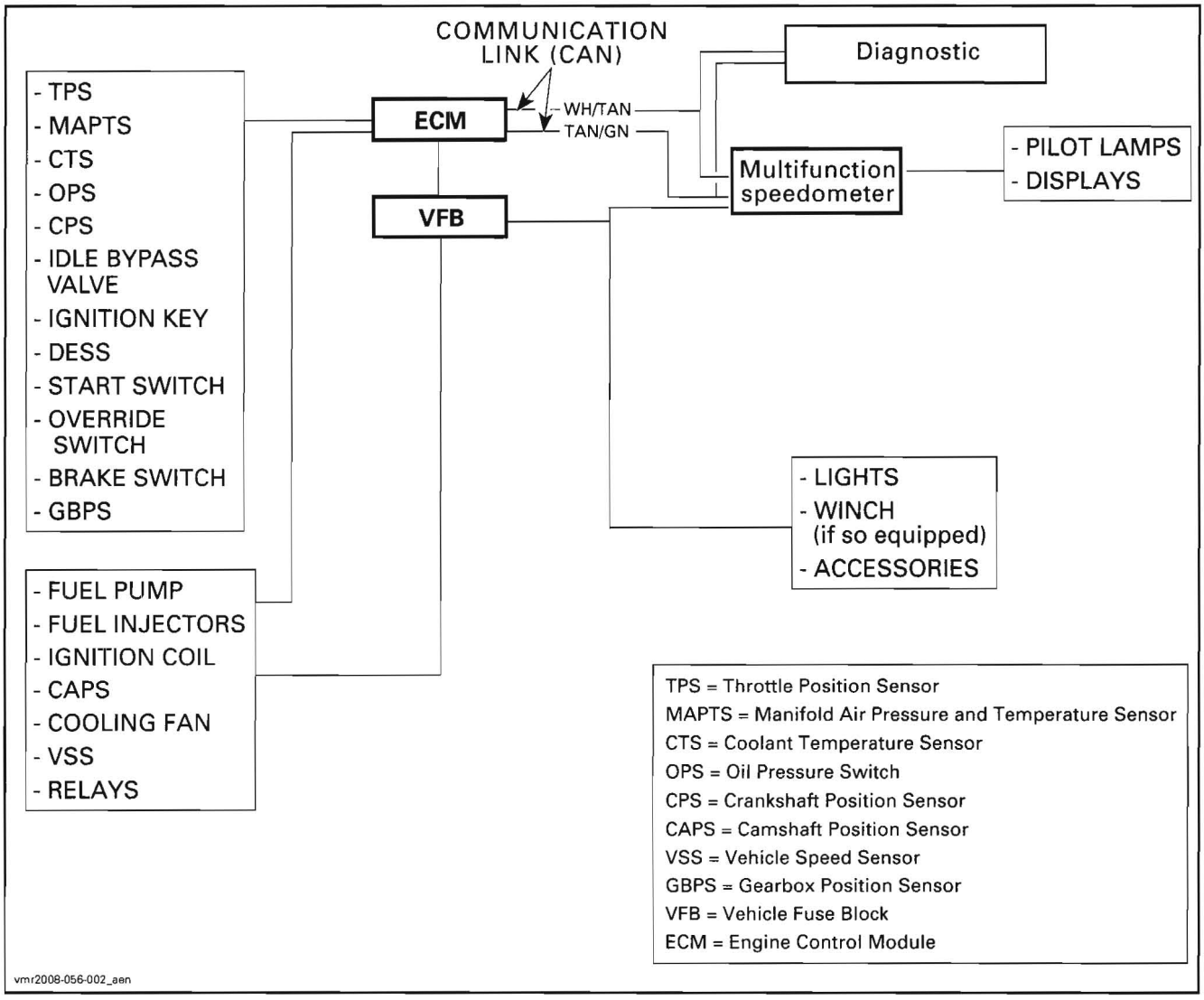

ENGINE MANAGEMENT SYSTEM

The EMS calculates the proper air/fuel mixture and ignition timing for each cylinder separately.

The ECM is the central point of the engine management system. It reads the inputs, makes computations, uses pre-determined parameters and sends the proper signals to the outputs for proper engine management.

ELECTRONIC FUEL INJECTION

The ECM reads the signals from different sensors which indicate engine operating conditions at millisecond intervals.

Signals from sensors are used by the ECM to determine the injection parameters (fuel maps) required for optimum air-fuel ratio.

The CPS, the MAPTS and the TPS are the primary sensors used to control the injection and ignition timing. Other sensors (like temperature sensors, etc.) are used for secondary input.

IGNITION

The ignition system is fully managed by the ECM which controls the ignition system parameters, such as spark timing, duration and firing order to achieve the proper engine requirements.

Ignition Coil

A double ignition coil induces voltage to a high level in the secondary winding to produce a spark at each spark plug independently.

The ignition coil receives input from the ECM.

Ignition coil is located in front of engine.

www.midwestmanuals.com
Sales@midwestmanuals.com

www.midwestmanuals.com

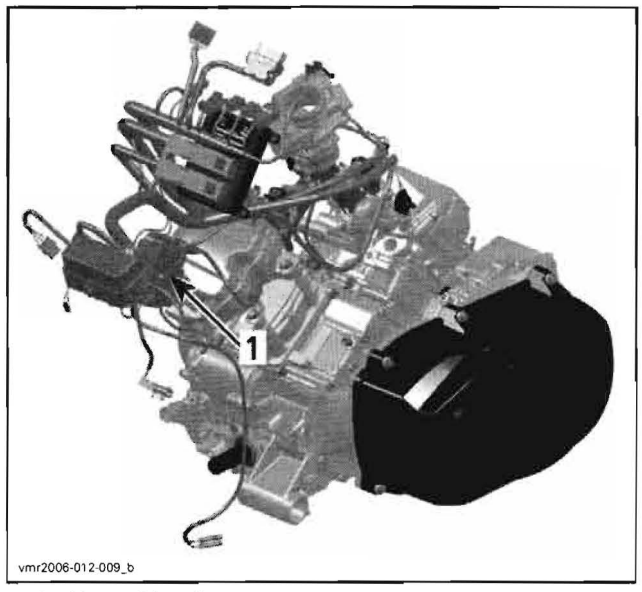

1. Ignition coil location

Ignition Timing

The ECM is programmed with data (it contains ignition mappings) for optimum ignition timing under all operating conditions. Using engine operating conditions provided by the sensors, the ECM controls the ignition timing for optimum engine operation. There is no adjustment to perform.

ENGINE MODES OF OPERATION

Engine RPM Limiter

The ECM will limit the maximum engine speed when vehicle shifter is in:

- forward position (Hi and LO individually)
- neutral position
- park position
- reverse position.

The ECM uses the CPS and the GBPS (gearbox position sensor) for this function.

An override switch, on the handlebar, allows the engine speed to run higher than the RPM limiter when more power is needed in reverse operation. Refer to *LIGHTS, GAUGE AND ACCESSORIES*.

Vehicle Speed Limiter

The ECM will limit the maximum vehicle speed both in 2WD and in 4WD. For this purpose, the ECM uses the VSS (vehicle speed sensor) and the GBPS (gearbox position sensor).

Limp Home Mode

Besides the signals seen above, the ECM may automatically set default parameters to the engine management to ensure the adequate operation of the engine if a component of the fuel injection system is not operating properly. The engine will operate with reduced performance to protect the engine. In more severe cases, the engine RPM will be limited, also to protect the engine.

These performance-reduced modes allow the rider to go back home which would not be otherwise possible without this advanced system. Refer to the *COMMUNICATION TOOLS AND B.U.D.S. SOFTWARE* for a complete chart.

When a sensor failure occurs,the ECM will send out a signal to the multifunction speedometer to warn the operator.

NOTE: LIMP MODE will be displayed in the multifunction speedometer and check engine light will flash. Refer to *LIGHTS, GAUGE AND ACCESSORIES*.

When minor fault occurs, the fault and message in the multifunction speedometer may disappear automatically when the ignition key is turned off and kept off until lights turn off in multifunction speedometer, then turned back on.

In the following situations, engine RPM will be limited.

CONDITION	MAX ALLOWED RPM
High engine temperature	4000
Low battery voltage	5000
Low oil pressure	
Safety fuel cut-off (TPS or internal memory error)	
High battery voltage	7000

Drowned Mode (flooded engine)

If engine is fuel-flooded and does not start, this special mode can be activated to prevent fuel injection and ignition while cranking. Proceed as follows to activate it.

With ignition key in ignition switch while engine is stopped, press and HOLD throttle lever at WOT position.

Press the start button. The mode is now on.

Releasing throttle lever will bring back the normal mode.

www.midwestmanuals.com
Sales@midwestmanuals.com

www.midwestmanuals.com

If engine does not start, it may be necessary to remove spark plugs and crank engine with rags over spark plug holes. Refer to *ADJUSTMENT AND REPAIR PROCEDURES* subsection.

⚠ WARNING

When disconnecting coil from spark plug, always disconnect coil from main harness first. Never check for engine ignition spark from an open coil and/or spark plug in the engine compartment as spark may cause fuel vapor to ignite.

MONITORING SYSTEM

The ECM monitors the electronic components of the fuel injection system and also parts of the electrical system. When a fault occurs, the ECM sends out signals to the multifunction speedometer to inform you of a particular condition. Refer to the *COMMUNICATION TOOLS AND B.U.D.S. SOFTWARE* for the fault codes chart.

Battery Voltage Warning Device

When the battery voltage is either too low or too high, the ECM sends out a signal to the multifunction speedometer.

NOTE: Either LO BATT or HI BATT will be displayed in the multifunction speedometer and check engine light will flash. Limp home will be set.

Low Oil Pressure Warning Device

When the engine oil pressure falls under a certain level, the ECM sends out a signal to the multifunction speedometer.

NOTE: LOW OIL will be displayed in the multifunction speedometer and check engine light will flash. Limp home will be set.

Brake Monitoring

The ECM monitors the brakes through the brake switch. If parking brake is activated or the driver inadvertently keeps the brake depressed for more than 15 seconds (either when vehicle moves or not), the ECM sends out a signal to the speedometer. BRAKE will be displayed in the multifunction speedometer.

Shutdown Mode

When engine run/stop switch is turned OFF **or** ignition key is turned OFF position, speedometer will turn off within 15 seconds. All the electrical system is cut-off.

Engine not running: When engine run/stop switch is in RUN position **and** ignition key is left in the ON position, the accessories are powered. After 15 minutes, the ECM shuts down all functions except multifunction speedometer. ECM and multifunction speedometer will draw power.

NOTE: If engine starting is desired at this point, it is required to turn ignition key OFF, wait until speedometer turns OFF then, turn key back ON.

To prevent battery drain, always turn OFF either ignition key **or** engine run/stop switch.

DIAGNOSTIC MODE

The fault codes are recorded in the memory of the ECM. They can be checked by using the software B.U.D.S.

Refer to the *COMMUNICATION TOOLS AND B.U.D.S. SOFTWARE* subsection.

www.midwestmanuals.com
Sales@midwestmanuals.com

www.midwestmanuals.com

ENGINE MANAGEMENT SYSTEM FLOW CHART

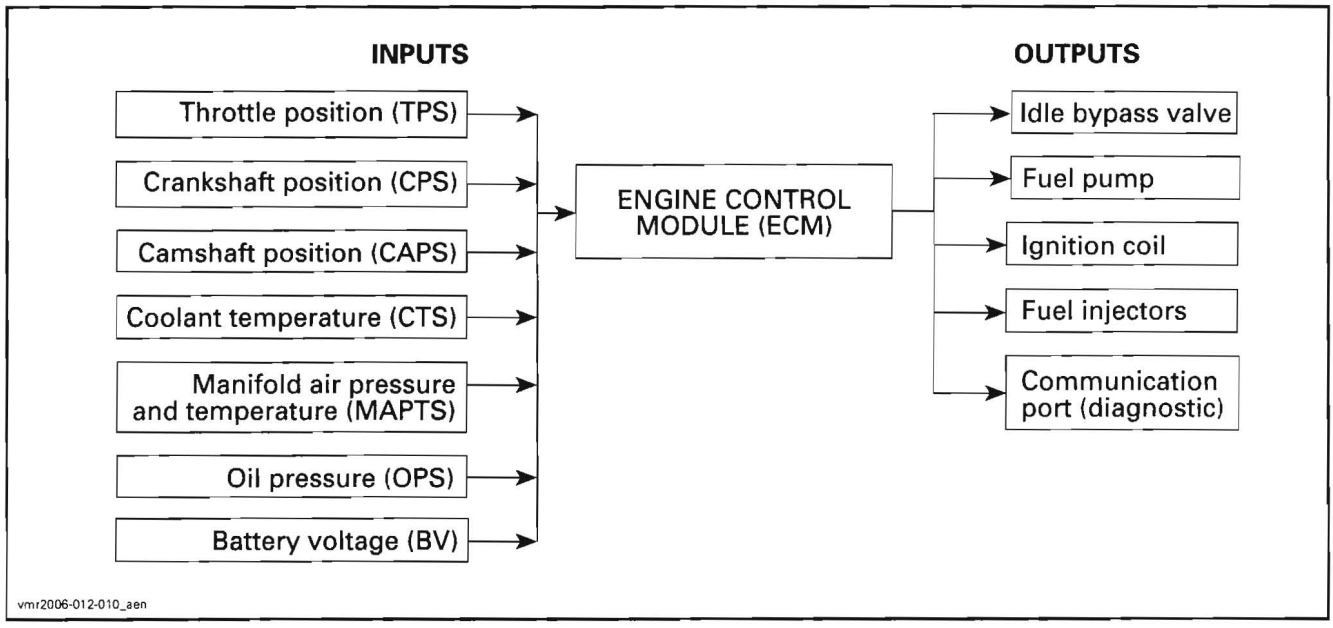

www.midwestmanuals.com
Sales@midwestmanuals.com

www.midwestmanuals.com

www.midwestmanuals.com
Sales@midwestmanuals.com

www.midwestmanuals.com

EMS DIAGNOSTIC

GENERAL

Here is the basic order suggested to diagnose a suspected engine management or fuel injection related problem:

- Check the chart in the *TROUBLESHOOTING* section to have an overview of problems and suggested solutions.
- Check if the engine management system (EMS) pilot lamp is ON or blinks. If so, use the B.U.D.S. software and look for fault codes to diagnose the trouble.

NOTE: When a fault code is present, the EMS pilot lamp will turn on. When EMS is in limp home mode, the lamp will blink.

- Check all fuses.
- Check relay(s).
- Check fuel pressure.
- Check spark plugs condition.
- Check all connections of the wiring harness.
- Refer to *ADJUSTMENT AND REPAIR PROCEDURES* section for procedures.

When using the service action suggested in the **Fault** section of B.U.D.S., the system circuits are referred to as 2-A-41, which means connector "A" on the ECM and pin 41. The first digit (2) indicates connector location in vehicle such as shown in the *WIRING DIAGRAMS*.

On-Board Diagnostic

Fault codes starting with the letter "P" followed by 4 digits (P-1234) can be displayed in the multifunction gauge for troubleshooting.

Proceed as follows:

NOTE: Renegade gauge is shown but procedures apply to Outlander models as well.

Turn ignition key to lights ON position.

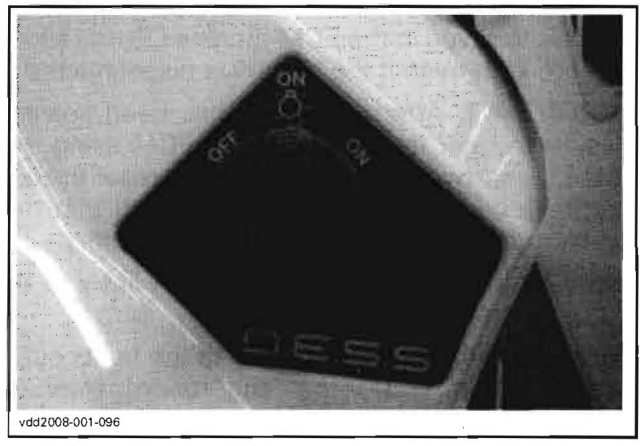

vdd2008-001-096

Use the mode button and scroll to Engine Hour (EH) on the gauge.



vdd2008-001-095

Press and HOLD mode button while QUICKLY toggling HI - LO beam.

NOTE: A minimum of 3 HI - LO toggles must be completed within 2 seconds.

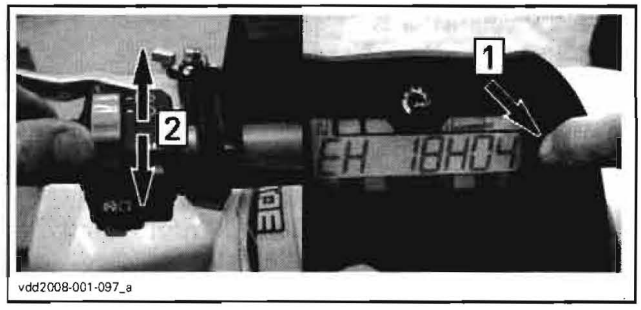

vdd2008-001-097_a

Step 1: Press and hold
Step 2: Quickly toggle HI - LO beam

If there is no P-Code, the "No Active P Codes" will be displayed.

If there is any P-Code, it will be displayed.

- If there is more than one P-Code, they will automatically scroll.
- Once the last P-Code is displayed, gauge displays END then defaults back to normal operation.

www.midwestmanuals.com
Sales@midwestmanuals.com

www.midwestmanuals.com

FAULT CODES

General

The faults saved in the ECM (Engine Control Module) are kept even if the battery is disconnected.

IMPORTANT: After a problem has been solved, ensure to clear the fault(s) in the ECM using the B.U.D.S. software. This will properly reset the appropriate counter(s) and will also record that the problem has been fixed in the ECM memory.

Many fault codes at the same time is likely to be burnt fuse(s) or a faulty relay.

For more information pertaining to the fault codes (state, count, first, etc.) and report, refer to B.U.D.S. online help.

TPS (Throttle Position Sensor) Faults

Faults which are reported in B.U.D.S. fall into two groups: TPS faults and adaptation faults. These are displayed on the B.U.D.S. system as TPS OUT OF RANGE and TPS ADAPTATION FAILURE.

TPS "OUT OF RANGE" Fault

It is caused by the sensor reading going out of its allowable range. This fault can occur during the whole range of movement of the throttle.

To diagnose this fully, it is recommended to operate the throttle through its full range. It is also recommended to release the throttle quickly as this may also reveal a fault that is intermittent.

POSSIBLE CAUSES	ACTION
Check if connector is disconnected from TPS	Fix.
Check if sensor is loose	Tighten and reset **Closed Throttle and Idle Actuator**.
Inspect sensor for damage or corrosion	Replace and reset **Closed Throttle and Idle Actuator**.
Inspect wiring (voltage test)	Repair.
Inspect wiring and sensor (resistance test)	If bad wiring, repair. If bad TPS, replace and reset **Closed Throttle and Idle Actuator**.
Test sensor operation (wear test)	Replace and reset **Closed Throttle and Idle Actuator**.

TPS "ADAPTATION FAILURE" Fault

It is caused by the idle position moving out of an acceptable range.

Following problems can be caused by a TPS "Adaptation Failure":

- Idle speed is out of range.
- Engine stops when throttle is released quickly.
- Engine runs inconsistent in low partload or low RPM.

POSSIBLE CAUSES	ACTION
Sensor has been replaced and TPS closed position not reset	Reset **Closed Throttle and Idle Actuator**.
Throttle body has been replaced and TPS closed position not reset	Reset **Closed Throttle and Idle Actuator**.
ECM has been replaced and TPS closed position not reset	Reset **Closed Throttle and Idle Actuator**.
Throttle cable too tight	Tighten and reset **Closed Throttle and Idle Actuator**.
Sensor is loose	Tighten and reset **Closed Throttle and Idle Actuator**.
Throttle bracket is loose	Tighten and reset **Closed Throttle and Idle Actuator**.
Idle speed screw (tamper proof) worn or loose	Change throttle body.
Idle bypass valve replaced but not reset	Reset **Closed Throttle and Idle Actuator** using B.U.D.S.

Fault Code P2119

Wrong ECM. Installed ECM is not appropriate for the vehicle. Engine will crank but will not start. Refer to *PARTS CATALOG* for proper ECM according to vehicle.

www.midwestmanuals.com
Sales@midwestmanuals.com

www.midwestmanuals.com

FAULT CODE TABLE

P-CODE	DESCRIPTION	CAUSE	ACTION	GAUGE	ENGINE REACTION	DESCRIPTION OF LIMP HOME EFFECT
P0106	Air pressure sensor voltage out of range	Sensing port dirty or blocked. Sensor failure or unexpected reading at idle. Sensor fallen out of intake manifold.	Make sure sensor's connector is fully inserted. Check for approximately 5 volts between sensor connector pins 1 and 3. Check system circuits 2-A-12, 2-A-28 and 2-A-40.	Engine pilot lamp/check engine and limp home	Limp home	No rev limit but air pressure is set to a default value
P0107	Air pressure sensor voltage too low	Damaged circuit wires, damaged or disconnected sensor, sensor shorted to ground.	Make sure sensor's connector is fully inserted. Check for approximately 5 volts between sensor connector pins 1 and 3. Check system circuits 2-A-12, 2-A-28 and 2-A-40.	Engine pilot lamp/check engine and limp home after a few seconds	Limp home	No rev limit but air pressure is set to a default value
P0108	Air pressure sensor voltage too high	Damaged circuit wires, damaged or disconnected sensor, sensor shorted to a supply.	Make sure sensor's connector is fully inserted. Check for approximately 5 volts between sensor connector pins 1 and 3. Check system circuits 2-A-12, 2-A-28 and 2-A-40.	Engine pilot lamp/check engine and limp home	Limp home	No rev limit but air pressure is set to a default value
P0111	Air temperature sensor functional problem	Intermittent air temperature sensor reading or circuit wires shorted to ground.	Check system circuits 2-A-7 and 2-A-21. Replace the sensor if necessary.	Engine pilot lamp/check engine and limp home	Limp home	No rev limit but air temperature is set to a default value
P0112	Air temperature sensor voltage too low	Air temperature sensor or circuit wires shorted to ground.	Disconnect the sensor and check for a change in the fault code. If the fault code stays the same, look for a short circuit on the harness. If the fault code is different, replace the sensor. Check system circuits 2-A-7 and 2-A-21.	Engine pilot lamp/check engine and limp home	Limp home	No rev limit but air temperature is set to a default value
P0113	Air temperature sensor voltage too high	Disconnected sensor or sensor's resistance too high.	Check for disconnected air temperature sensor on the intake. Check the air temperature sensor for approximately 2000 to 4200 ohms at 10 to 25°C (50 to 77°F). Replace the sensor if necessary. Check system circuits 2-A-7 and 2-A-21.	Engine pilot lamp/check engine and limp home	Limp home	No rev limit but air temperature is set to a default value
P0116	Engine temperature sensor functional problem	Intermittent engine temperature sensor reading or circuit wires shorted to ground.	Check system circuits 2-A-11 and 2-A-27. Replace the sensor if necessary.	Engine pilot lamp/check engine and limp home	No effect	No rev limit but engine temperature is set to a default value

www.midwestmanuals.com
Sales@midwestmanuals.com

www.midwestmanuals.com

P-CODE	DESCRIPTION	CAUSE	ACTION	GAUGE	ENGINE REACTION	DESCRIPTION OF LIMP HOME EFFECT
P0117	Engine temperature sensor voltage too low	Engine temperature sensor or circuit wires shorted to ground.	Disconnect the sensor and check for a change in the fault code. If the fault code stays the same, look for a short circuit on the harness. If the fault code is different, replace the sensor. Check for leakage between sensor's connection and ground. Check system circuits 2-A-11 and 2-A-27.	Engine pilot lamp/check engine and limp home	No effect	No rev limit but engine temperature is set to a default value
P0118	Engine temperature sensor voltage too high	Disconnected sensor or sensor's resistance too high.	Check for disconnected engine temperature sensor. Check the engine temperature sensor for approximately 2280 to 2736 ohms at 19 to 21°C (66 to 70°F). Replace the sensor if necessary. Check system circuits 2-A-11 and 2-A-27.	Engine pilot lamp/check engine and limp home	No effect	No rev limit but engine temperature is set to a default value
P0122	Throttle position sensor voltage too low	Damaged circuit wires, damaged throttle position sensor or damaged ECM pins.	Check system circuits 2-A-24, 2-A-25 and 2-A-39. Refer to the *SERVICE MANUAL* for complete throttle position sensor testing procedure.	Engine pilot lamp and check engine	Engine will not start	
P0123	Throttle position sensor voltage too high	Damaged circuit wires, damaged throttle position sensor or damaged ECM pins.	Check system circuits 2-A-24, 2-A-25 and 2-A-40. Refer to the *SERVICE MANUAL* for complete throttle position sensor testing procedure.	Engine pilot lamp and check engine	Engine will not start	
P0231	Fuel pump open circuit or shorted to ground	Damaged or disconnected fuel pump, damaged circuit wires, damaged connectors or damaged ECM output pins.	Check for damaged or disconnected connector on fuel pump. Check for approximately 1 ohm between pins 5-FP-3 and 5-FP-4 of the fuel pump connector. Check for approximately 1 ohm between pins F5 and 2-B-29.	Engine pilot lamp and check engine	Will not run	
P0232	Fuel pump shorted to battery	Damaged fuel pump, damaged circuit wires, damaged connectors or damaged ECM output pins.	Check for approximately 1 ohm between pins 5-FP-3 and 5-FP-4 of the fuel pump connector. Check for approximately 1 ohm between pins F5 and 2-B-29. Check if system circuit 2-B-29 is shorted to 12 V.	Engine pilot lamp and check engine	Will not run long	

www.midwestmanuals.com
Sales@midwestmanuals.com

www.midwestmanuals.com

P-CODE	DESCRIPTION	CAUSE	ACTION	GAUGE	ENGINE REACTION	DESCRIPTION OF LIMP HOME EFFECT
P0261	Cylinder #1 injector open circuit or shorted to ground	Blown fuse, damaged or disconnected injector, damaged or disconnected circuit wires, damaged ECM output pins.	Check fuse F1. Check connections on injector. Check for approximately 14.5 ohms on injector. Check system circuit 2-A-15. Check connector CJ connecting the two harnesses together.	Engine pilot lamp/check engine and limp home	Engine pilot lamp/check engine and limp home	No rev but cylinder 1 will not work properly
P0262	Cylinder #1 injector shorted to battery	Damaged injector, damaged circuit wires, damaged connector or damaged ECM output pins.	Check for approximately 14.5 ohms on injector. Check if system circuit 2-A-15 is shorted to 12 V.	Engine pilot lamp/check engine and limp home	Engine pilot lamp/check engine and limp home	No rev but cylinder 1 will not work properly
P0264	Cylinder #2 injector open circuit or shorted to ground	Blown fuse, damaged or disconnected injector, damaged or disconnected circuit wires, damaged ECM output pins.	Check fuse F1. Check connections on injector. Check for approximately 14.5 ohms on injector. Check system circuit 2-A-33. Check connector CJ connecting the two harnesses together.	Engine pilot lamp/check engine and limp home	Engine pilot lamp/check engine and limp home	No rev but cylinder 2 will not work properly
P0265	Cylinder #2 injector shorted to battery	Damaged injector, damaged circuit wires, damaged connector or damaged ECM output pins.	Check for approximately 14.5 ohms on injector. Check if system circuit 2-A-33 is shorted to 12 V.	Engine pilot lamp/check engine and limp home	Engine pilot lamp/check engine and limp home	No rev but cylinder 2 will not work properly
P0336	High engine RPM detected	CPS signal not plausible, damaged circuit wires, damaged connector or damaged tooth wheel.	Check for metal deposit on sensor. Check circuit between 2-A-5, 2-A-19 and 4-CPS-1, 4-CPS-2. Replace sensor if necessary.	Engine pilot lamp and check engine	Erratic engine behavior	
P0337	No crankshaft signal detected	Damaged circuit wires, damaged CPS or damaged tooth wheel.	Check for metal deposit on sensor. Check circuit between 2-A-5, 2-A-19 and 4-CPS-1, 4-CPS-2. Replace sensor if necessary.	Engine pilot lamp and check engine	No start	
P0339	Crankshaft signal fault	CPS signal not plausible, damaged circuit wires, damaged connector or damaged tooth wheel.	Check for metal deposit on sensor. Check circuit between 2-A-5, 2-A-19 and 4-CPS-1, 4-CPS-2. Replace sensor if necessary.	Engine pilot lamp and check engine	Will not run	
P0344	Cam phase sensor signal missing	Blown fuse, damaged circuit wires or damaged sensor.	Check fuse F4. Check for 12 volts between sensor's connector pins 1 and 3. Check system circuits 2-A-20, 2-A-34 and F4.	Engine pilot lamp and check engine	Limp home	No rev but calculation of RPM will be less precise. Cold start will take more time.
P0351	No ignition output stage cylinder #1	Blown fuse, damaged circuit wires, damaged connector or damaged ignition coil.	Check fuse F3. Check for 2.2 ± 0.3 ohm between ignition coil pins. Check connector HIC connecting the two harnesses together. Check system circuit 2-A-1.	Engine pilot lamp/check engine and limp home	Limp home	No rev but cylinder 1 will not work properly

www.midwestmanuals.com
Sales@midwestmanuals.com

www.midwestmanuals.com

P-CODE	DESCRIPTION	CAUSE	ACTION	GAUGE	ENGINE REACTION	DESCRIPTION OF LIMP HOME EFFECT
P0352	No ignition output stage cylinder #2	Blown fuse, damaged circuit wires, damaged connector or damaged ignition coil.	Check fuse F3. Check for 2.2 ± 0.3 ohm between ignition coil pins. Check connector HIC connecting the two harnesses together. Check system circuit 2-A-1.	Engine pilot lamp/check engine and limp home	Limp home	No rev but cylinder 2 will not work properly
P0480	Engine fan short-circuit to battery	Blown fuse, damaged fan relay, damaged circuit wires, damaged pins or damaged ECM output pin.	Check fuse F4. Check for approximately 12 volts between 3-PF-1D and engine ground. Check system circuit 2-B-3.	Engine pilot lamp and check engine	No effect	
P0480	Engine fan short-circuit to ground or open	Blown fuse, damaged fan relay, damaged circuit wires, damaged or disconnected pins or damaged ECM output pin.	Check fuse F4. Check for disconnected relay or pin 3-PF-1 D and 3-PF-1E. Check for approximately 12 volts between 3-PF-1D and engine ground. Check system circuit 2-B-3.	Engine pilot lamp and check engine	No effect	
P0505	Idle air control valve output stage cutoff memory difference	Damaged actuator, damaged circuit wires, damaged connector or damaged ECM output pins.	Check for approximately 50 ohms between pins A and D and also between pins B and C of the idle air control valve. Check for damaged circuit wires. Check system circuits 2-A-35, 2-A-36, 2-A-37 and 2-A-38. Check for damaged connector or damaged ECM output pins.	Engine pilot lamp and check engine	Erratic engine behavior	
P0505	Idle air control valve output stage fault	Damaged actuator, damaged circuit wires, damaged connector or damaged ECM output pins.	Check for approximately 50 ohms between pins A and D and also between pins B and C of the idle air control valve. Check for damaged circuit wires. Check system circuits 2-A-35, 2-A-36, 2-A-37 and 2-A-38. Check for damaged connector or damaged ECM output pins.	Engine pilot lamp and check engine	Erratic engine behavior	
P0513	Incorrect DESS® key	DESS key not programmed. Wrong DESS key used. Bad contact on the DESS key. DESS key failure.	Clean DESS key. Program the DESS key.	Check engine/ incorrect DESS	Will not start	

www.midwestmanuals.com
Sales@midwestmanuals.com

www.midwestmanuals.com

P-CODE	DESCRIPTION	CAUSE	ACTION	GAUGE	ENGINE REACTION	DESCRIPTION OF LIMP HOME EFFECT
P0520	Oil pressure switch functional problem	Low oil level, engine leak, oil pump failure, damaged sensor, damaged or shorted circuit wires.	Check oil level. Check oil pressure switch resistance. With engine stopped, the resistance should be less than 1 ohm. With engine running, the resistance of oil switch should be infinitely high (0L). Check system circuit 2-A-10 to engine ground.	Engine pilot lamp and check engine	No effect	
P0562	Battery voltage too low	Battery failure, damaged circuit wires, damaged or disconnected magneto and regulator.	Check battery voltage for 12 to 13 volts with engine stopped. Check battery voltage for 13.8 to 15.0 volts with engine idling. Check connections on magneto and regulator.	Engine pilot lamp/check engine/low batt and limp home	Limp home	Rev at 5000
P0563	Battery voltage too high	Bad battery, damaged circuit wires or damaged regulator. An external battery charger may have been used.	Check battery voltage for 13.8 to 15.0 volts with engine idling. Check connections on battery. Replace regulator if necessary.	Engine pilot lamp/check engine/hi batt and limp home	Limp home	Rev at 7000
P0600	CAN Bus Off	Communication error between cluster and ECM and/or B.U.D.S.	Check for damaged circuit between 1-CI-23, 4-B-29 and 2-DB-1. Check for damaged circuit between 1-CI-24, 4-B-27 and 2-DB-2. Replace cluster if necessary.	No ECU communi-cation	No effect	
P0600	CAN ID 514 missing	Communication error between cluster and ECM and/or B.U.D.S.	Check system circuits 2-B-27 and 2-B-28 with 1-CI-23 and 1-CI-24. Refer to the *SERVICE MANUAL* for more details.	No ECU communi-cation	No effect	
P0601	Throttle position sensor adaptation failure	Wrong throttle body mechanical position during reset of closed TPS or no initialization after ECM replacement.	Check cable adjustment. Check idle stop for wear. Make sure throttle plate is against throttle stop. Reset closed TPS.	Engine pilot lamp/check engine		
P0601	Module call monitoring	Damaged ECM or faulty programming.	Try updating the ECM. If the problem persists, replace the ECM.	Engine pilot lamp/check engine		
P0602	ECM not coded	Damaged ECM or faulty programming.	Try updating the ECM. If the problem persists, replace the ECM.	Engine pilot lamp/check engine	Will not start	
P0604	RAM fault	Damaged ECM or faulty programming.	Try updating the ECM. If the problem persists, replace the ECM.	Engine pilot lamp/check engine		
P0605	EEPROM fault	Damaged ECM or faulty programming.	Try updating the ECM. If the problem persists, replace the ECM.	Engine pilot lamp/check engine		

www.midwestmanuals.com
Sales@midwestmanuals.com

www.midwestmanuals.com

P-CODE	DESCRIPTION	CAUSE	ACTION	GAUGE	ENGINE REACTION	DESCRIPTION OF LIMP HOME EFFECT
P0605	EEPROM checksum fault	Damaged ECM or faulty programming.	Try updating the ECM. If the problem persists, replace the ECM.	Engine pilot lamp/check engine		
P0605	Coding ID checksum fault	Damaged ECM or faulty programming.	Try updating the ECM. If the problem persists, replace the ECM.	Engine pilot lamp/check engine		
P0605	Coding checksum fault	Damaged ECM or faulty programming.	Try updating the ECM. If the problem persists, replace the ECM.	Engine pilot lamp/check engine		
P0605	Programming checksum fault	Damaged ECM or faulty programming.	Try updating the ECM. If the problem persists, replace the ECM.	Engine pilot lamp/check engine		
P0608	Sensor's power supply voltage too low	Inverted connectors between air pressure sensor and TPS. Damaged circuit wires, shorted air pressure sensor or shorted TPS.	Check system circuits 2-A-12, 2-A-28, 2-A-40, 2-A-24, 2-A-25 and 2-A-39.	Engine pilot lamp/check engine	Limp home	No rev but all associated sensors will be set to a default value
P0608	Sensor's power supply voltage too high	Damaged circuit wires, TPS or air pressure sensor shorted to a supply.	Check system circuits 2-A-12, 2-A-28, 2-A-40, 2-A-24, 2-A-25 and 2-A-39.	Engine pilot lamp/check engine	Limp home	No rev but all associated sensors will be set to a default value
P0616	Starter relay open circuit or shorted to ground	Blown fuse, damaged or disconnected starter relay, damaged circuit wires, damaged connectors or damaged ECM output pins.	Check fuse F4. Disconnect the starter relay and check for approximately 7.3 ohms between the small starter relay terminals. Check for approximately 12 volts between starter relay OR/GN wire and ground. Check system circuit 2-B-31.	Engine pilot lamp/check engine	Will not start	
P0617	Starter relay shorted to battery	Damaged solenoid, damaged circuit wires, damaged connector or damaged ECM output pins.	Disconnect the starter relay and check for approximately 7.3 ohms between the small starter relay terminals. Check if system circuit 2-B-31 is shorted to 12 V.	Engine pilot lamp/check engine	Will not start	
P0705	Transmission range sensor circuit malfunction (PRNHL)	Improbable combination of transmission switches.	Check for disconnected or damaged transmission contact. Check circuit 2-A-2, 2-A-6 and 2-A-31. Refer to *B.U.D.S. TRANSMISSION* switch diagnostic. Refer to *SERVICE MANUAL* for transmission service.	Check engine/"E" is displayed	Limp home	No rev but engine will react as if the gear were in high
P1102	Throttle position sensor adaptation failure	Wrong throttle body mechanical position during reset of closed TPS or no initialization after ECM replacement.	Check cable adjustment. Check idle stop for wear. Make sure throttle plate is against throttle stop. Reset closed TPS.	Engine pilot lamp/check engine		

www.midwestmanuals.com
Sales@midwestmanuals.com

www.midwestmanuals.com

P-CODE	DESCRIPTION	CAUSE	ACTION	GAUGE	ENGINE REACTION	DESCRIPTION OF LIMP HOME EFFECT
P1104	Throttle position sensor adaptation failure	Wrong throttle body mechanical position during reset of closed TPS or no initialization after ECM replacement.	Check cable adjustment. Check idle stop for wear. Make sure throttle plate is against throttle stop. Reset closed TPS.	Engine pilot lamp/check engine		
P1116	High temp	High temperature of the cooling liquid.	Refer to *SERVICE MANUAL* for high engine temperature.	Check engine/hi temp	Limp home	Rev at 4050
P1148	Safety fuel cut off detected	TPS adaptation failure, TPS failure, damaged ECM memory or battery voltage out of range.	Check cable adjustment. Check idle stop for wear. Make sure throttle plate is against throttle stop. Reset closed TPS.	Engine pilot lamp/check engine	Limp home	Rev at 5000
P1202	Oil pressure switch still closed	Low oil level, engine leak, oil pump failure, damaged sensor, damaged or shorted circuit wires.	Check oil level. Check oil pressure switch resistance. With engine stopped, the resistance should be less than 1 ohm. With engine running, the resistance of oil switch should be infinitely high (OL). Check system circuit 2-A-10 to engine ground.	Engine pilot lamp/check engine	No effect	
P1203	Oil pressure switch leakage	Low oil level, engine leak, oil pump failure, damaged sensor, damaged or shorted circuit wires.	Check oil level. Check oil pressure switch resistance. With engine stopped, the resistance should be less than 1 ohm. With engine running, the resistance of oil switch should be infinitely high (OL). Check system circuit 2-A-10 to engine ground.	Engine pilot lamp/check engine	No effect	
P1520	Low oil	Low oil detected in engine.	Refer to *SERVICE MANUAL* for low oil service.	Check engine/low oil	Limp home	Rev at 4000
P1655	DESS® line shorted to battery	Damaged circuit wires or mixed up connection pins.	Check system circuits 2-B-38, and 2-B-39 with 1-CC-C and 1-CC-D.	Check engine/ incorrect DESS	Will not start	
P1656	DESS® line shorted to ground	Damaged circuit wires or mixed up connection pins.	Check system circuits 2-B-38, and 2-B-39 with 1-CC-C and 1-CC-D.	Check engine/ incorrect DESS	Will not start	
P1675	Relay 2 shorted to battery	Damaged relay, damaged circuit wires, damaged connector or damaged ECM output pins.	Check for approximately 100 ohms between relay pins 85 and 86. Check if system circuit 2-B-14 is shorted to 12 V.	Engine pilot lamp/check engine	ECM will not do memory tracking sequence	

www.midwestmanuals.com
Sales@midwestmanuals.com

www.midwestmanuals.com

P-CODE	DESCRIPTION	CAUSE	ACTION	GAUGE	ENGINE REACTION	DESCRIPTION OF LIMP HOME EFFECT
P1676	Relay 2 open circuit or shorted to ground	Blown fuse, damaged or disconnected relay, damaged or disconnected circuit wires, damaged ECM output pins.	Check fuse F4. Check for approximately 100 ohms between relay pins 85 and 86. Check system circuit 2-B-14.	Engine pilot lamp/check engine	ECM will not do memory tracking sequence	
P1683	CAN RAM Fault	Communication error between cluster and ECM and/or B.U.D.S.	Check for damaged circuit between 1-CI-23, 4-B-29 and 2-DB-1. Check for damaged circuit between 1-CI-24, 4-B-27 and 2-DB-2. Replace cluster if necessary.	Engine pilot lamp/check engine	No effect	
P2119	ECU wrong	Incorrect ECU or cluster for engine.	Install proper recommended ECU or gauge for vehicle.	Engine pilot lamp/check engine	Will not start	



sales@midwestmanuals.com
www.midwestmanuals.com

www.midwestmanuals.com
Sales@midwestmanuals.com

www.midwestmanuals.com

ADJUSTMENT AND REPAIR PROCEDURES

SERVICE TOOLS

Description	Part Number	Page
pliers	295 000 070	206
ECM adapter	420 277 010	195
tachometer	529 014 500	197
Fluke 111 multimeter	529 035 868	195, 199
Back probe test wires	529 036 063	195

SERVICE PRODUCTS

Description	Part Number	Page
Loctite 243	293 800 060	212, 216, 218

GENERAL

Engine problems are not necessarily related to the electronic fuel injection system.

It is important to ensure that the mechanical integrity of the engine/propulsion system is present:
- good transmission system operation
- good engine compression and properly operating mechanical components, no leaks etc.
- fuel pump connection and fuel lines without leaks.

Check the chart in *TROUBLESHOOTING* section to have an overview of problems and suggested solutions.

When replacing a component, always check its operation after installation.

FUEL SYSTEM

⚠ WARNING

Fuel is flammable and explosive under certain conditions. Ensure work area is well ventilated. Do not smoke or allow open flames or sparks in the vicinity.

⚠ WARNING

Always disconnect battery prior to working on the fuel system. Always disconnect battery exactly in the specified order, BLACK (-) cable first. It is recommended to disconnect electrical connections prior to disconnecting fuel lines.

⚠ WARNING

The fuel system of a fuel injection system holds much more pressure than on a carbureted ATV. Prior to disconnecting a hose or to removing a component from the fuel system, follow the recommendation described here.

- Use the B.U.D.S. software to release the fuel pressure in the system (refer to *EMS DIAGNOSTIC*). Look in the **Activation** section of the software B.U.D.S.

www.midwestmanuals.com
Sales@midwestmanuals.com

www.midwestmanuals.com

⚠ WARNING

Fuel lines remain under pressure at all times. Always proceed with care and use appropriate safety equipment when working on pressurized fuel system. Wear safety glasses. Proceed with care when removing/installing pressure test equipment or disconnecting fuel line connections. Use the software B.U.D.S. to release fuel pressure prior to removing a hose. Cover the fuel line connection with an absorbent shop rag. Slowly disconnect the fuel hose to minimize spilling. Wipe off any fuel spillage in the engine compartment. Do not allow fuel to spill on hot engine parts and/or on electrical connectors. Never use a hose pincher on injection system high pressure hoses. Replace any damaged or deteriorated fuel lines.

When the repair is completed, ensure that all hoses are connected and secured. Perform the *FUEL PRESSURE TEST* and the *FUEL TANK LEAK TEST* as explained in *FUEL TANK AND FUEL PUMP* section.

⚠ WARNING

Always perform the fuel pressure test if any component has been removed. A pressure test must be done before turning the ignition key to ON and setting the engine run/stop switch to RUN. The fuel pump is activated each time in these conditions. After performing a fuel pressure test, use the valve on the fuel pressure gauge to release the pressure (if so equipped).

To locate a leak, pressurize the system. Check for leaking fuel or fuel odor. Spray soapy water on all hose connections, fuel rail and injectors. Air bubbles will show the leaking area.

ELECTRICAL SYSTEM

It is important to check that the electrical system is functioning properly:

- battery
- fuses
- relay(s)
- diodes
- DESS
- ignition (spark)
- ground connections
- wiring connectors
- multifunction gauge.

It is possible that a component seems to operate in static condition but in fact, it is defective. In this case, the best way to solve this problem is to remove the original part and replace it with one which is in good condition.

Never use a battery charger to substitute temporarily the battery, as it may cause the ECM (engine control module) to work erratically or not to work at all. Check related-circuit fuse solidity and condition with an ohmmeter. Visual inspection could lead to false results.

⚠ WARNING

Some EMS components are continuously powered by the VFB (Vehicle Fuse Block) when ignition key is turned on and engine run/stop switch is set in RUN position. The ECM switches the circuit to the ground to complete the electrical circuits it controls. Take this into account when troubleshooting. Always disconnect the battery prior to disconnecting any electric or electronic parts.

Pay particular attention to ensure that pins are not out of their connectors or out of shape.

When probing terminals, pay attention not to bend the terminal as this could bring a loose connection that would be difficult to troubleshoot.

⚠ WARNING

Ensure all terminals are properly crimped on wires and connector housings are properly fastened.

Before replacing an ECM, always check electrical connections. Make sure terminals are properly crimped on wires and fastened in housing, and that they are free of corrosion or moisture. Check if wiring harness shows any signs of scoring. Ensure proper electrical connection. Particularly check ECM ground connections. A "defective module" could possibly be repaired simply by unplugging and replugging the ECM. The voltage and current might be too weak to go through dirty wire pins.

For the electrical connectors, pay attention to the following:

- ECM connectors: Do not apply dielectric grease or any other lubricant.
- Other connectors: Apply a silicon-based dielectric grease or other appropriate lubricant.

Ensure that all electronic components are genuine. Any modification on the wiring harness may lead to generate fault codes or bad operation.

www.midwestmanuals.com
Sales@midwestmanuals.com

www.midwestmanuals.com

NOTE: For diagnostics purposes, use B.U.D.S. software. See *COMMUNICATION TOOLS AND B.U.D.S. SOFTWARE* subsection.

After a problem has been solved, ensure to clear the fault(s) in the ECM using the B.U.D.S. software. Refer to *EMS DIAGNOSTIC* subsection.

Diagnostic Tools

To perform verifications, use the Fluke 111 multimeter (P/N 529 035 868).



To easily probe wire terminals through the back of their connectors, Back probe test wires (P/N 529 036 063) can be used.

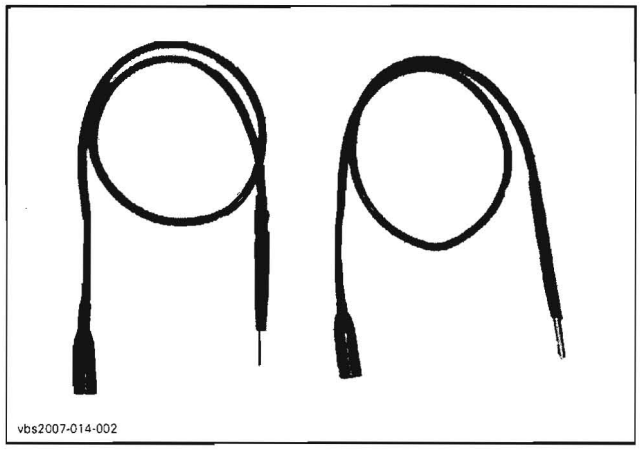

They can be inserted at the end of the standard probes of the Fluke 111 multimeter (P/N 529 035 868).

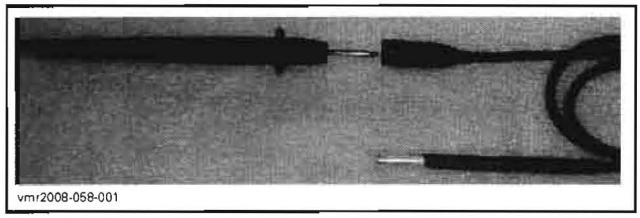

The most recommended and safest method to probe ECM connector terminals is to use the ECM adapter (P/N 420 277 010). This tool will prevent deforming or enlarging terminals which would lead to bad ECM terminal contact creating intermittent or permanent problems.

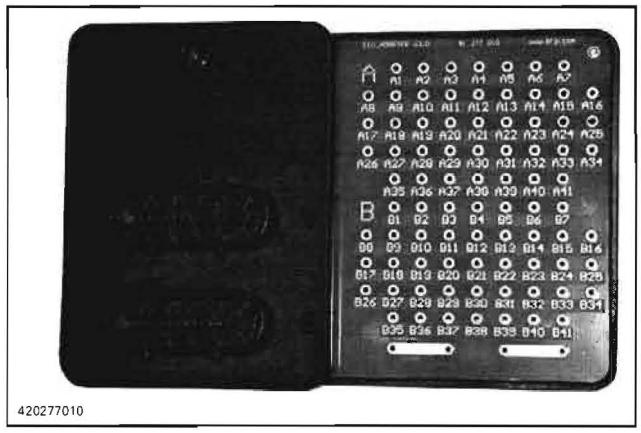

Disconnect the desired connector from ECM and reconnect on the tool connector. Probe required terminals directly in the tool holes.

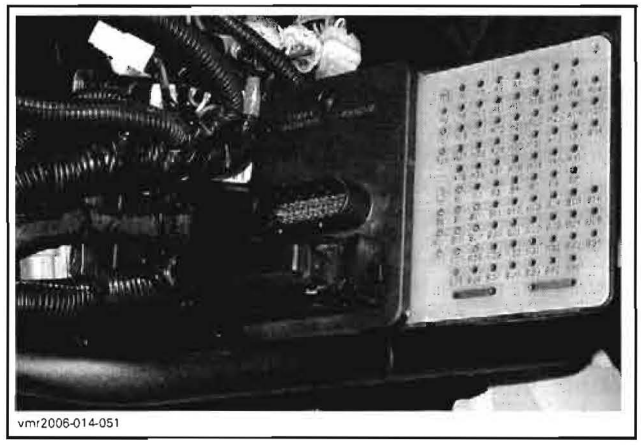

Resistance Measurement

When measuring the resistance with an ohmmeter, all values are given for a temperature of 20°C (68°F). The resistance value of a resistance varies with the temperature. The resistance value for usual resistor or windings (such as injectors) **increases** as the temperature increases. However, our temperature sensors are NTC types (Negative Temperature Coefficient) and work the opposite which means that the resistance value **decreases** as the temperature increases. Take it into account when measuring at temperatures different from 20°C (68°F). Use this table for resistance variation relative to temperature for **temperature** sensors.

www.midwestmanuals.com
Sales@midwestmanuals.com

www.midwestmanuals.com

TEMPERATURE SENSOR TABLE			
TEMPERATURE		RESISTANCE (ohms)	
°C	°F	MAPTS	CTS
- 40	- 40	—	45000
- 30	- 22	28000	28000
- 20	- 4	14500	15000
0	32	5500	5750
20	68	2500	2600
40	104	1200	1200
60	140	600	600
80	176	320	320
100	212	180	180
130	266	90	90

CONVERSION CHART FOR TEMPERATURE SENSORS

The resistance value of a temperature sensor may test good at a certain temperature but it might be defective at other temperatures. If in doubt, try a new sensor.

Also remember this validates the operation of the sensor at room temperature. It does not validate the over temperature functionality. To test it, the sensor could be removed from the engine and heated with a heat gun while it is still connected to the harness to see if the ECM will detect the high temperature condition and generate a fault code.

ECM Connectors

The ECM connectors are identified by the letter "A" and "B".

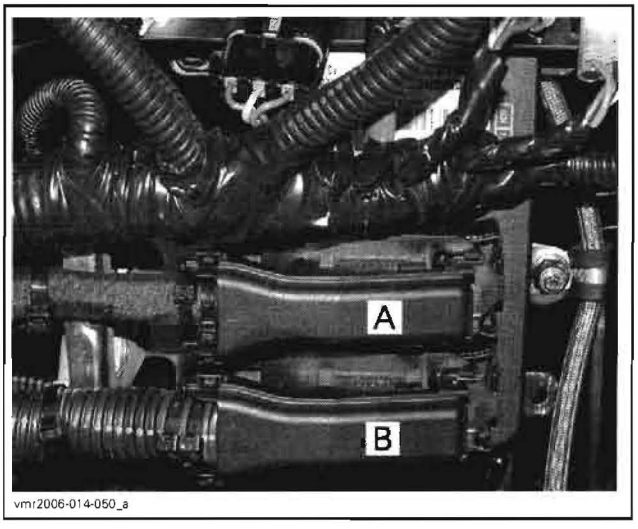

Engine Connector

Remove center panel and dashboard. Refer to *BODY*.

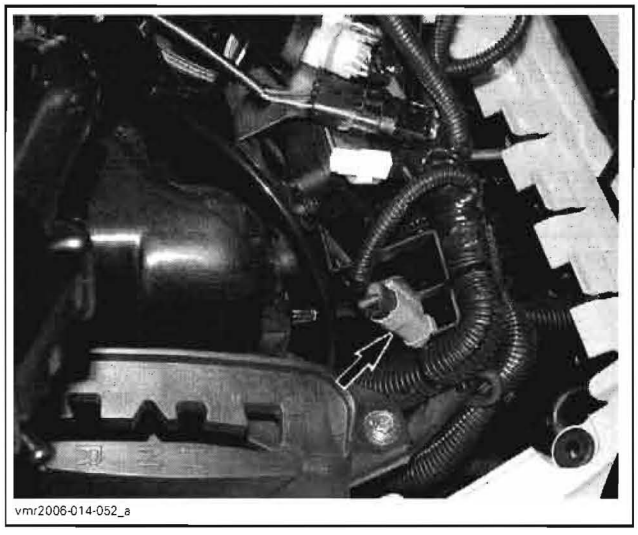

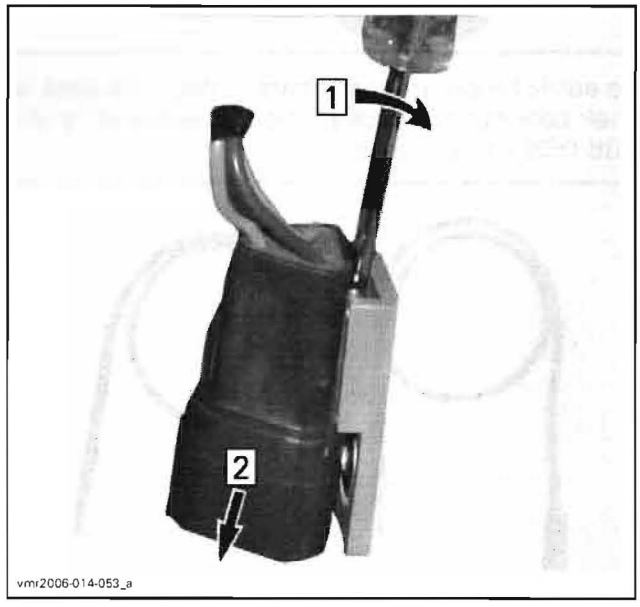

TYPICAL — CONNECTOR REMOVAL

Use this illustration to locate the pin numbers on the engine connector when performing tests.

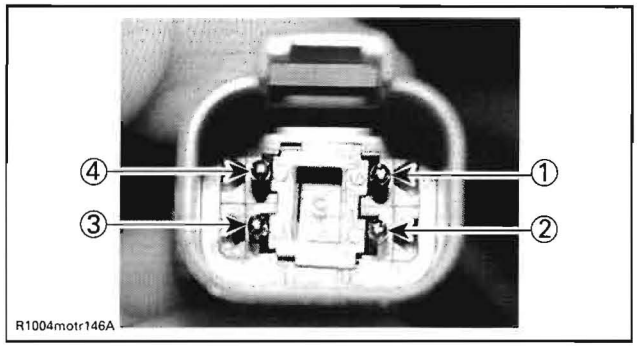

ENGINE CONNECTOR PIN-OUT (ENGINE SIDE)

www.midwestmanuals.com
Sales@midwestmanuals.com

www.midwestmanuals.com

BASIC ADJUSTMENTS

IDLE SPEED

The idle speed is not adjustable. The ECM controls the idle speed of the engine.

CAUTION: Never attempt to adjust the sealed idle stop screw. It is calibrated at the factory. If the screw adjustment is changed, the throttle body must be replaced.

If desired, the engine RPM can be verified with the tachometer (P/N 529 014 500).

Install the tachometer wire on spark plug cable.

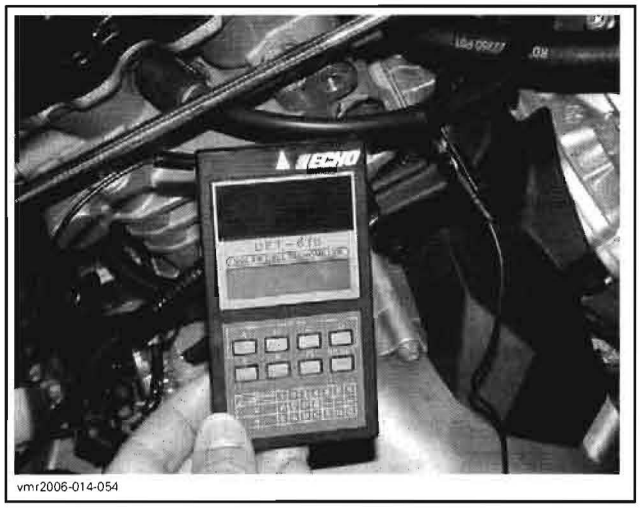
vmr2006-014-054

THROTTLE CABLE

Mechanically adjust the throttle cable as follows.

Handlebar and throttle cable must be at their normal position. Throttle cable routing must have been performed before adjusting cable.

Activate throttle lever a few times. Make sure throttle cam of throttle body rests against set screw without any tension in the cable.

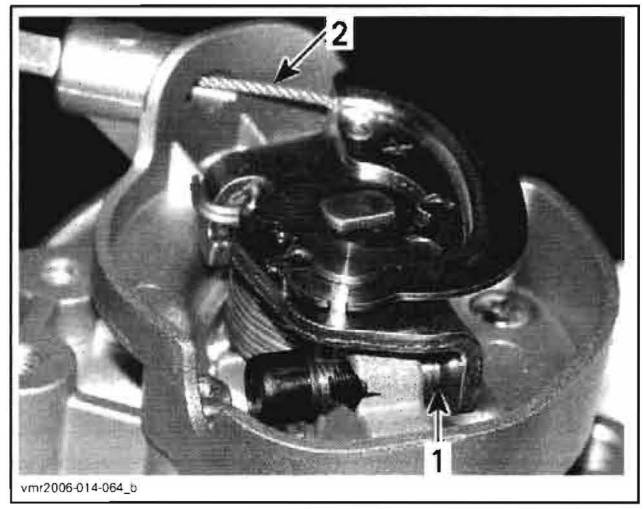

vmr2006-014-064_b

1. *Contact here*
2. *Free-play here*

CAUTION: If there is no free-play at idle position, it may cause poor idling and startability problems. Improper cable adjustment will cause strain on cable and/or damage cable bracket or throttle lever at handlebar.

⚠ WARNING

Make sure idle speed stopper contacts throttle cam when throttle lever is fully released at handlebar.

If adjustment is needed, proceed with adjuster at handlebar. Adjust to have 2 mm (.078 in) free-play. When done, slide back cable protector over adjuster.

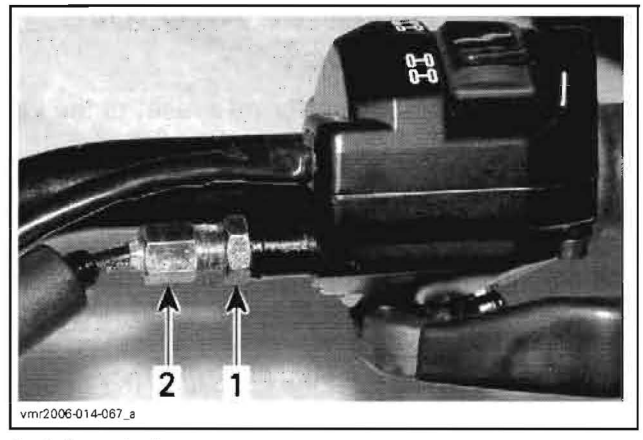

vmr2006-014-067_a

1. *Adjuster lock nut*
2. *Adjuster*

Turn handlebar side to side and ensure there is still free-play in each position.

To ensure there is no strain in the cable at wide open position:

www.midwestmanuals.com
Sales@midwestmanuals.com

www.midwestmanuals.com

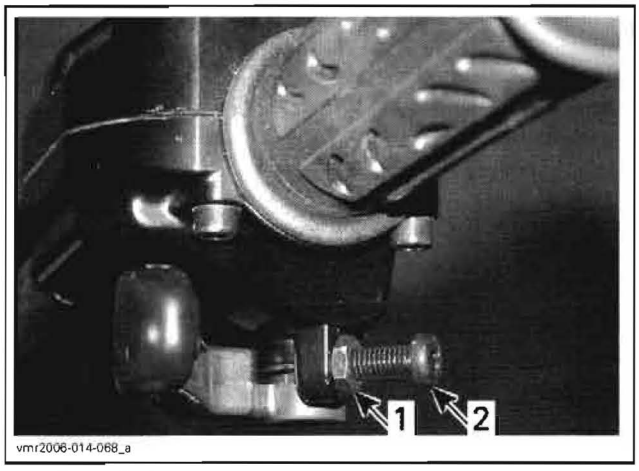

1. Adjuster lock nut
2. Adjuster

- Fully depress throttle lever and hold.
- Slacken adjuster lock nut/adjuster until it just releases lever.
- Turn adjuster clockwise until it touches lever again.
- From there, tighten adjuster 1/2 turn (to remove strain in cable).
- Tighten lock nut.
- Release throttle lever.

Reinstall throttle body cover.

Closed Throttle and Idle Actuator Reset

Perform the **Closed Throttle and Idle Actuator** reset.

CLOSED THROTTLE AND IDLE ACTUATOR RESET

NOTE: This operation performs a reset of the values in the ECM.

This reset is very important. The setting of the TPS will determine the basic parameters for all fuel mapping and several ECM calculations and the setting of the idle bypass valve will determine the basic parameters for the idle speed control of the engine.

NOTE: Reset must be done each time the throttle position sensor (TPS) is loosened or removed or throttle body is replaced or ECM is replaced.

CAUTION: An improperly set TPS or idle bypass valve may lead to poor engine performance and emission compliance could possibly be affected. In addition, improper idle bypass valve reset may lead to poor engine starting, improper idle (too low or too high) and engine stop on deceleration.

Use the B.U.D.S. software to perform this adjustment.

Remove throttle body cap and ensure the throttle cam of throttle body rests against set screw without any tension in the cable.

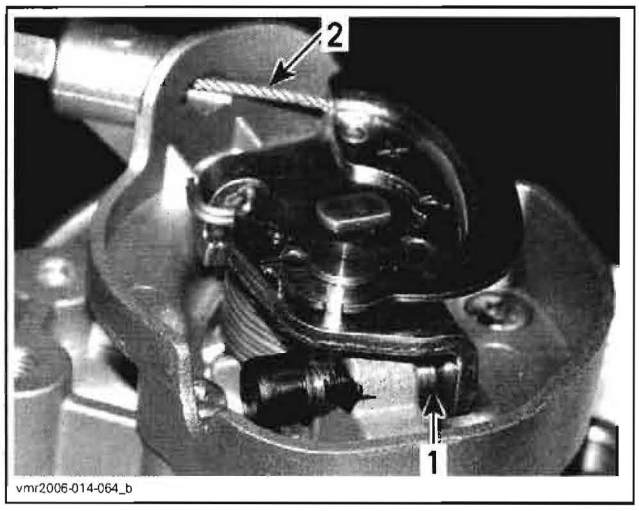

1. Contact here
2. Free-play here

Open throttle approximately one quarter then quickly release. Repeat 2 - 3 times to settle throttle plate. If stopper does not rest against its stop lever, perform throttle cable adjustment. Refer to *THROTTLE BODY* in this section.

To reset valve and TPS, click on the **Reset** button in the **Setting** section of B.U.D.S.

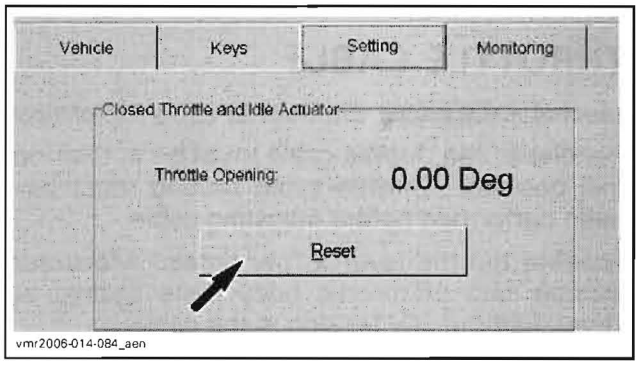

NOTE: No message will be displayed if operation is successful. If operation is wrong, an error message will be displayed.

NOTE: There is no idle speed adjustment to perform. The ECM takes care of that. If TPS is not within the allowed range while resetting the **Closed Throttle and Idle Actuator**, the ECM will generate a fault code and will not accept the setting.

Start engine and make sure it operates normally through its full engine RPM range. If fault codes appear, refer to *EMS DIAGNOSTIC* section for more information.

www.midwestmanuals.com
Sales@midwestmanuals.com

www.midwestmanuals.com

IGNITION TIMING

The ignition timing is not adjustable.

REPAIR PROCEDURES

MAIN RELAY (R2)

Relay (R2) Installation

NOTE: Relays may be inverted by 180° at installation and they will work correctly. Ensure to align tabs of relay with terminals of fuse holder at installation.

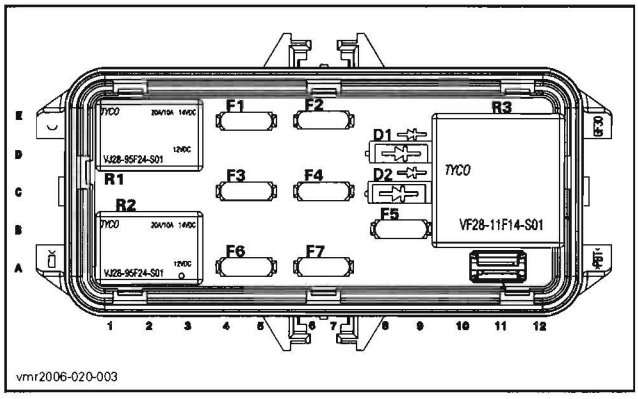

R2: Main relay

Relay (R2) Continuity Test

Remove relay.

Use the Fluke 111 multimeter (P/N 529 035 868), and select the Ω position.

Probe relay as follows.

TERMINAL		RESISTANCE
30	87	Open circuit (OL)

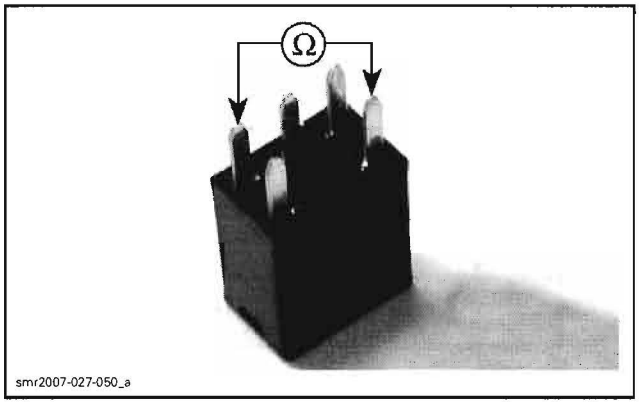

Connect battery as shown and probe relay again as follows.

TERMINAL		RESISTANCE
30	87	0.5 Ω max. (continuity)

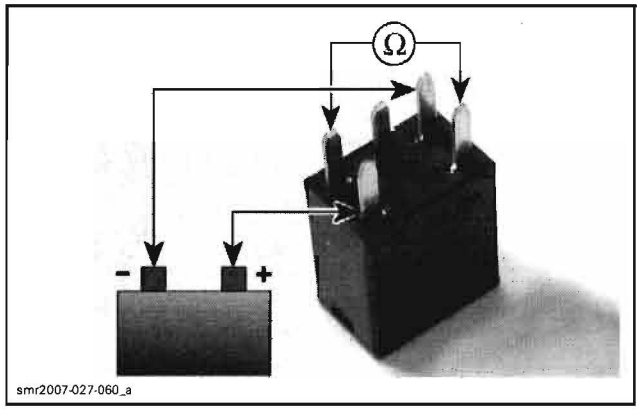

If relay failed any test, replace it.

D1 DIODE (ECM)

The diode D1 is located in the fuse holder.

The fuse holder is located in the front service compartment.

Diode (D1) Installation

Validate D1 diode installation as shown.

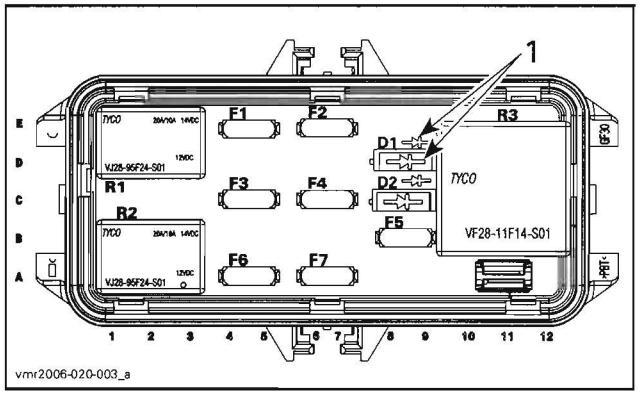

1. Position symbol on diode in same direction as symbol on fuse holder

Problems Related to Diode D1

ECM does not turn on	– Missing diode – Inverted diode installation – Defective diode (open)
ECM does not turn off (engine will not shut off)	– Defective diode (shorted)

www.midwestmanuals.com
Sales@midwestmanuals.com

www.midwestmanuals.com

Diode (D1) Test

Remove diode and lay down on a non-metallic table.

Set multimeter as shown.

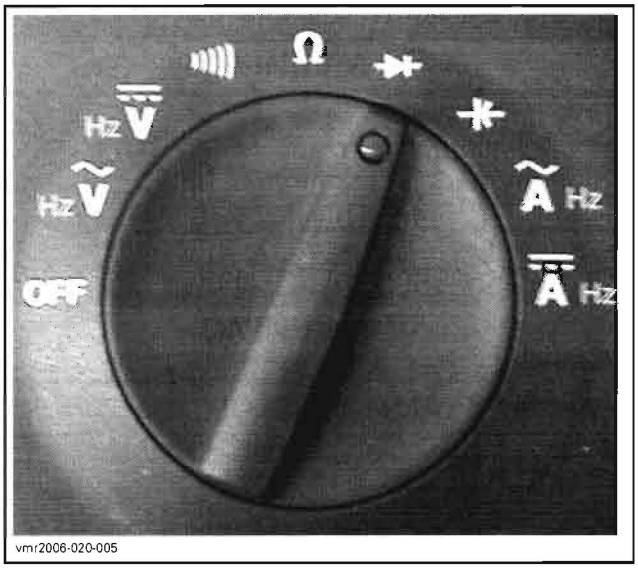

vmr2006-020-005

Probe diode paying attention to proper polarity.

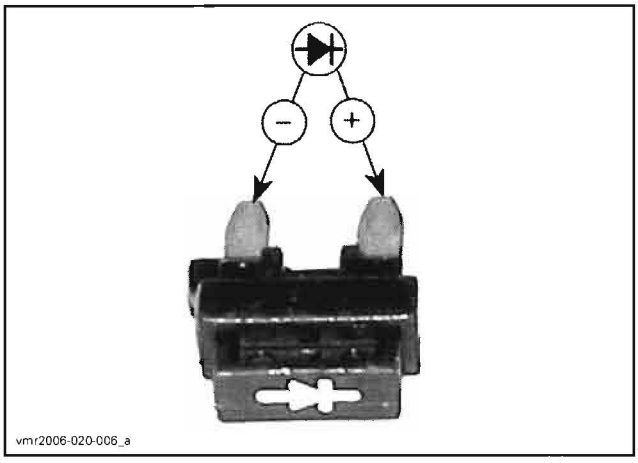

vmr2006-020-006_a

MUST BE OPEN CIRCUIT

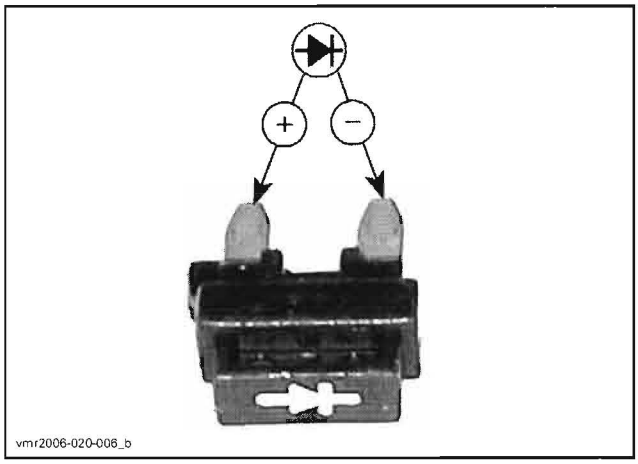

vmr2006-020-006_b

MUST BE AROUND 0.5 V

If diode fail any test, replace it.

ENGINE CONTROL MODULE (ECM)

Quick Test to Validate ECM Operation

Turn ignition key to ON **AND** set engine run/stop switch to RUN.

NOTE: When both switches are ON, it triggers the ECM and it then turns on.

QUICK INDICATION THAT ECM IS NOT WORKING (assuming the observed component is working)
Multifunction gauge does not turn on.
Fuel pump does not turn on for approx. 5 seconds (when turning key on and setting engine run/stop switch RUN).
Rear light does not turn on.
Headlamp do not turn on (with ignition key at light position).

If Engine Stop Running for no Reason

It may be caused by the ECM that is improperly reset (it restarts).

- If it occurs when using the winch, check diodes D5 and D6. Refer to *LIGHTS, GAUGE AND ACCESSORIES* section for diode testing procedure.
- If it occurs at any time, check diode D2. Refer to *STARTING SYSTEM* section for diode testing procedure.

ECM Power Supply and Ground Pinout

FUNCTION	CONNECTOR PIN
Power 12 Vdc	B-11
Grounds	B1, B2, B32 and B41

ECM Power Supply Verification

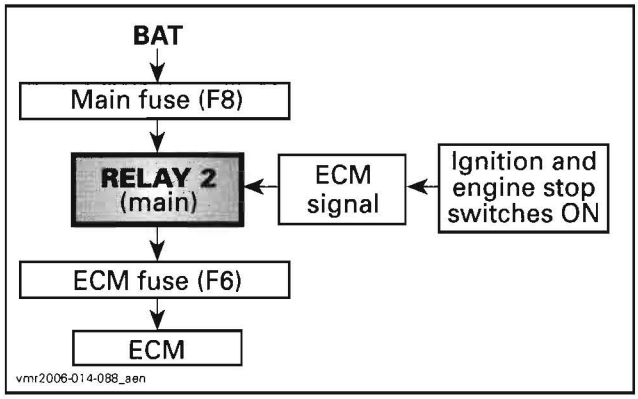

vmr2006-014-088_aen

www.midwestmanuals.com
Sales@midwestmanuals.com

www.midwestmanuals.com

NOTE: If engine is not started within 15 minutes after ignition switch was turned on and engine run/stop switch was set to RUN, ECM will go in sleep mode and will cut power to everything except the multifunction gauge. To exit that mode, turn off ignition key and WAIT until multifunction gauge turns off then, turn ignition key back on.

Check fuses F8 and F6.

Check main relay R2.

To check relay operation, remove relay and bypass it with a jumper between terminals as shown.

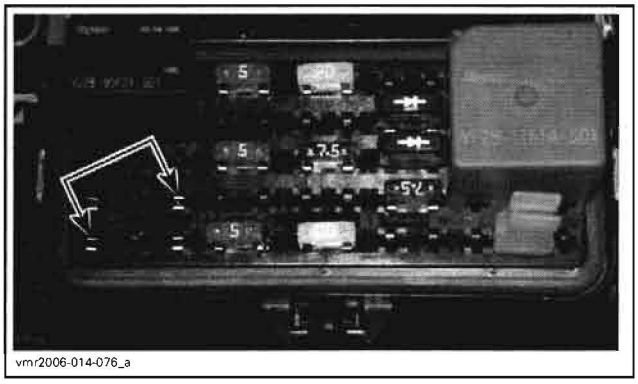
vmr2006-014-076_a

If ECM does NOT Work when Bypassing Relay R2:

Problem is on the **contact side of relay** circuit, check wiring/connectors from battery to ECM.

- Disconnect connector "B" from ECM.
- Keep the jumper to bypass relay.

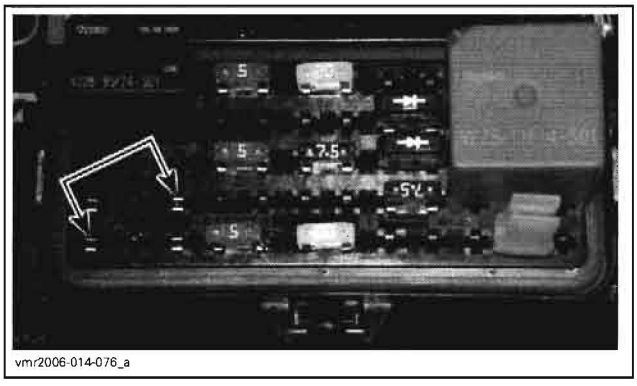
vmr2006-014-076_a

- Read voltage as follows.

ECM CONNECTOR "B"		MEASUREMENT
PIN		VOLTAGE
B-1 (ground)	B-11	12 Vdc

- If voltage is good, check ignition switch, engine run/stop switch and their wiring/connectors. Refer to *IGNITION SYSTEM*. If they test good, check **signal side of relay** as described under *IF ECM WORKS WHEN BYPASSING RELAY* below.
- If voltage is not good, read voltage as follows.

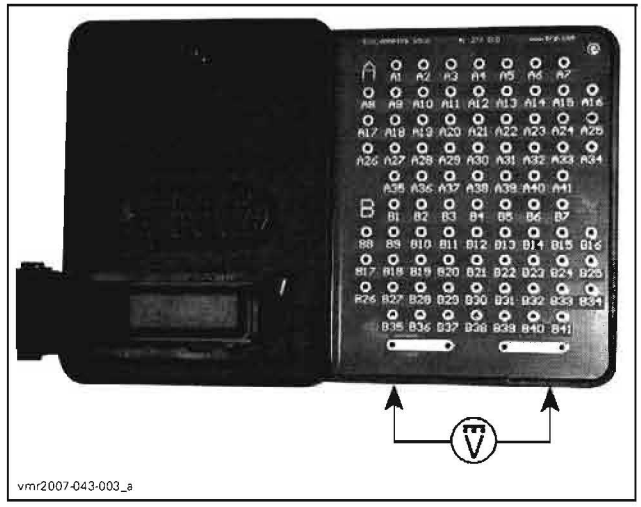
vmr2007-043-003_a

ECM CONNECTOR "B"		MEASUREMENT
PIN		VOLTAGE
B-11	Battery ground	Battery voltage

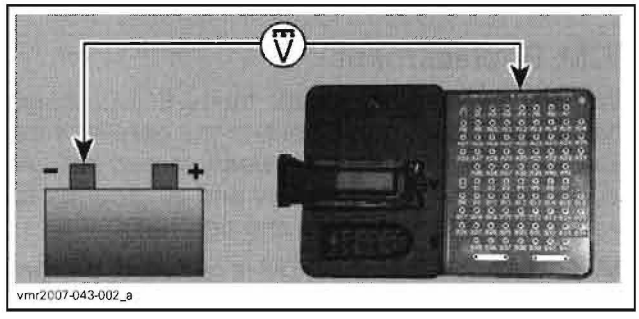
vmr2007-043-002_a

- If voltage is now good, check ECM ground circuits and battery ground.
- If voltage is still not good, remove jumper in fuse box and read voltage as follows.

www.midwestmanuals.com
Sales@midwestmanuals.com

www.midwestmanuals.com

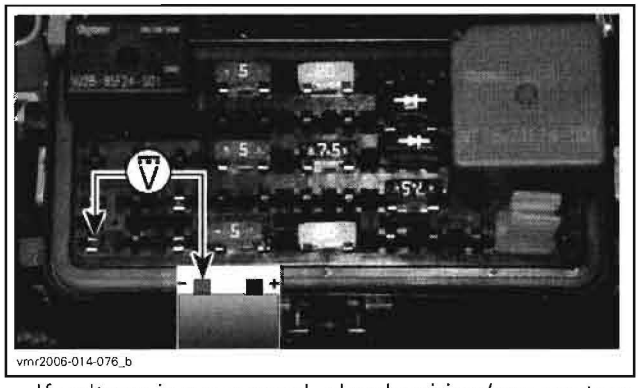
vmr2006-014-076_b

- If voltage is now good, check wiring/connectors from fuse block to ECM.
- If voltage is NOT good, check wiring/connectors from battery to fuse block.

If ECM WORKS when Bypassing Relay:

Relay is likely to be faulty. Test relay. Refer to *MAIN RELAY (R2)* above in this section.

If relay tested good, problem is on the **input signal of relay** circuit. Do the following:

- Check diode D1. Refer to *DIODE D1 (ECM)* above in this section.
- Check wiring/connectors from battery to fuse block.
- Check wiring/connectors from fuse block to ECM.
- Try a new ECM.

ECM Replacement

Prior to replacing a possibly faulty ECM, ensure that all the recommendations in the general introduction of this section have been carried out. Also, check ECM power supply and all grounds for proper contact/cleanliness and tightness.

IMPORTANT: When the ECM is replaced, the ignition key(s) and the **Closed Throttle and Idle Actuator** must be reprogrammed/reset. Refer to their specific section for adjustment.

To allow transferring the previous recorded information from the old ECM to the new one, use the B.U.D.S. software. Select ECM, **Replace** in the **Module** menu. Follow instructions in its help system.

NOTE: If the old ECM still works, its information must be read by B.U.D.S. before being removed from the vehicle in order to transfer vehicle information and history to the new ECM.

Disconnect battery cables.

⚠ WARNING

Battery BLACK negative cable must always be disconnected first and connected last.

Remove center panel and dashboard. Refer to *BODY*.

Disconnect both connectors from ECM.

Unscrew retaining screws and remove the ECM from vehicle.

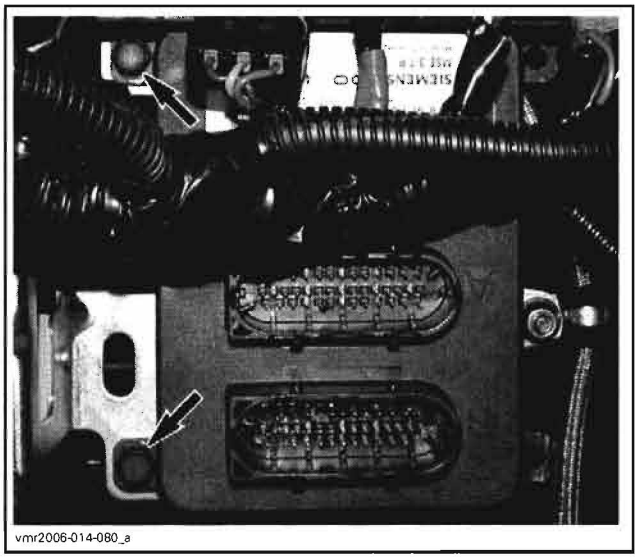
vmr2006-014-080_a

Install the new ECM to the vehicle.

Reconnect connectors to ECM, and then battery cables.

Transfer the data from the previous ECM to the new one using B.U.D.S. then proceed with the required resets and reprogram ignition key(s), if you were unable to transfer the data.

NOTE: If data cannot be transferred, manually enter information in **Vehicle** tab and **Engine serial number** in **History, Part Replacement**.

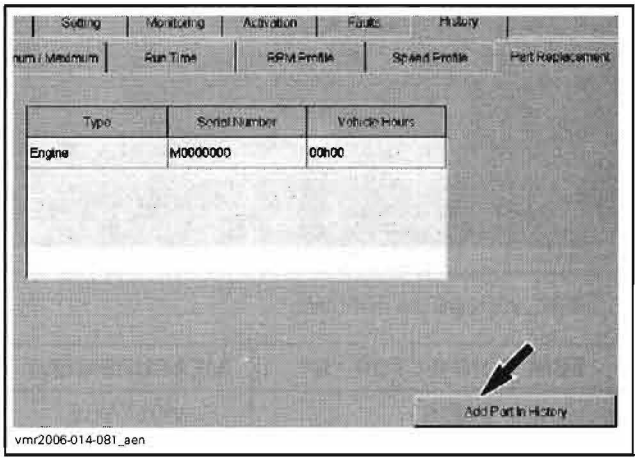

vmr2006-014-081_aen

www.midwestmanuals.com
Sales@midwestmanuals.com

www.midwestmanuals.com

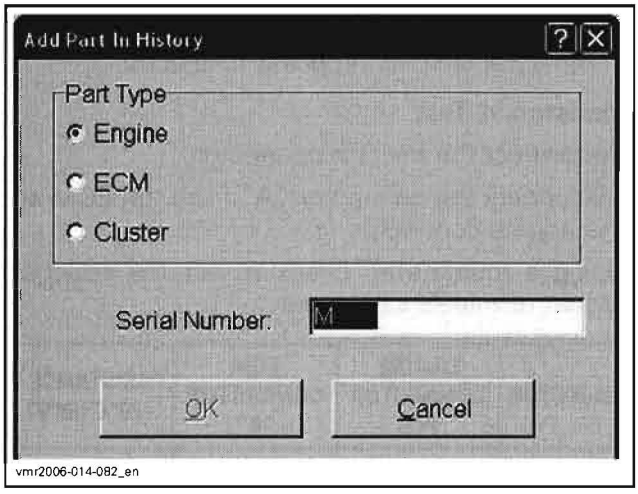

After performing the required resets, ensure to clear all faults from the newly replaced ECM.

Security Exchange

If you get the message shown in the following illustration, the installed ECM is not appropriate for the vehicle or its calibration has been changed. Engine will crank but will not start.

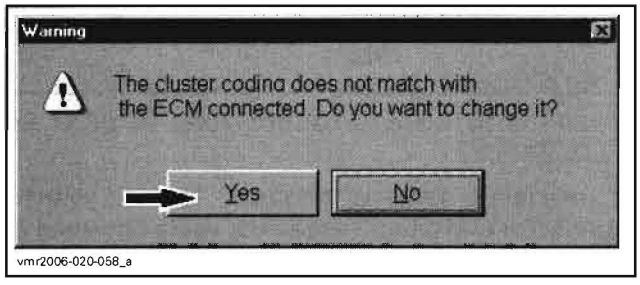

If it occured just after replacing the ECM, refer to *PARTS CATALOG* to get the proper ECM according to vehicle.

If you get this message after you have purposely changed the ECM calibration, Click "Yes" to update the system and to allow engine starting.

CAUTION: It is not recommended to start an engine with the wrong calibration.

FUEL INJECTOR

Leakage Test

The leakage test is validated when performing the "fuel delivery system diagnostic flow chart" in *FUEL TANK AND FUEL PUMP*.

Electrical Test

Turn ignition key ON and set engine run/stop switch to RUN.

Using the B.U.D.S. software, energize the fuel injector from the **Activation** section.

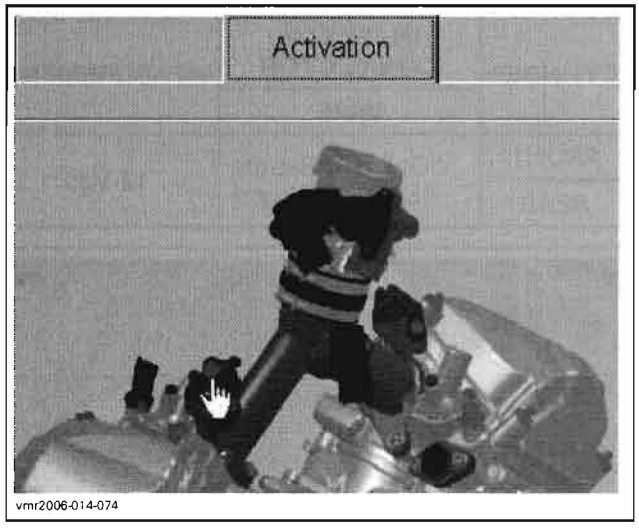

You should hear the injector working.

This will validate the injector mechanical and electrical operation.

If the injector does not work, check injector power supply.

Voltage Test

Disconnect the connector from the injector.

NOTE: If connector is hard to unlock, gently use a screwdriver to release connector.



NOTE: It is not necessary to activate the injector since it is continuously powered.

Use a multimeter and set it to Vdc. Read voltage.

www.midwestmanuals.com
Sales@midwestmanuals.com

www.midwestmanuals.com

CYLINDER	INJECTOR CONNECTOR		MEASUREMENT
	WIRE		
FRONT	VIOLET/ BLUE	Battery ground	12 Vdc
REAR			

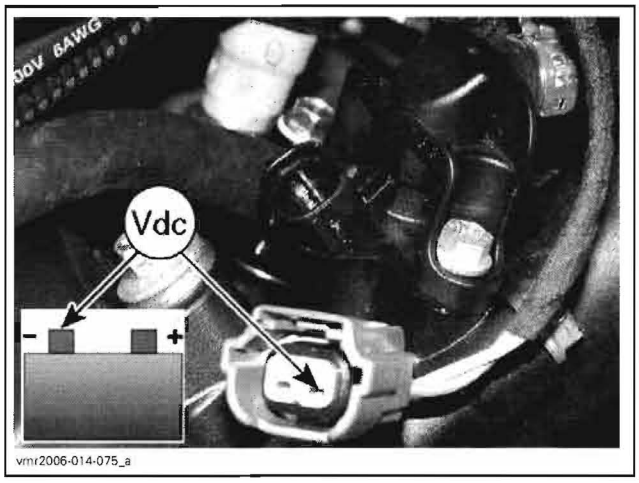

vmr2006-014-075_a

If supply voltage is good, check ground circuit between injector and ECM (see *WIRING DIAGRAMS*).

- If ground circuit is faulty, repair/replace.
- If ground circuit is good, refer to *ECM REPLACEMENT*.

If supply voltage is not good, check continuity between fuse F3 and injector (see *WIRING DIAGRAMS*).

NOTE: Probe fuse exactly as shown. This validates fuse at the same time.

Use a multimeter and set it to Ω. Read resistance.

CYLINDER	INJECTOR CIRCUIT		MEASUREMENT
	WIRE		
FRONT	VIOLET/ BLUE	Fuse F3	Close to 0 Ω
REAR			

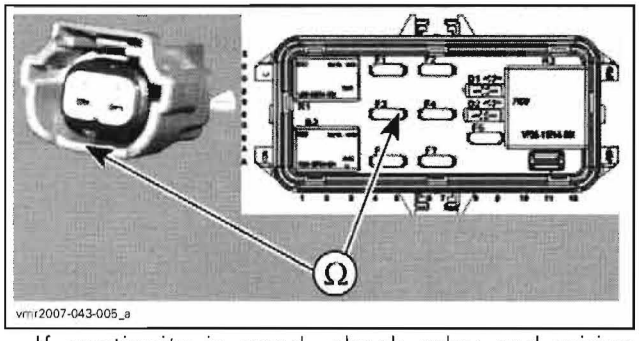

vmr2007-043-005_a

- If continuity is good, check relay and wiring from battery.
- If continuity is faulty, check fuse and if ok, repair/replace wiring going to injector.

Resistance Test

Reconnect the injector connector.

Disconnect the connector "A" from the ECM and the engine connector.

Using a multimeter, check resistance value between terminals as follows.

INJECTOR	ENGINE CONNECTOR PIN	ECM CONNECTOR "A"	RESISTANCE @ 20°C (68°F)
FRONT	3	A-15	13.8 - 15.2 Ω
REAR		A-33	

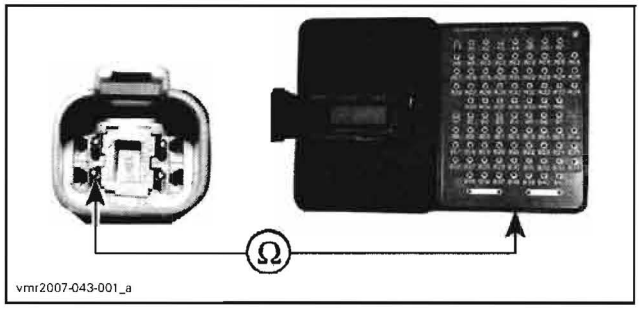

vmr2007-043-001_a

If resistance value is correct, refer to *ECM REPLACEMENT*.

If resistance value is incorrect, remove injector connector and check resistance value between injector pins as follows.

INJECTOR	INJECTOR PIN		RESISTANCE @ 20°C (68°F)
FRONT	1	2	13.8 - 15.2 Ω
REAR			

www.midwestmanuals.com
Sales@midwestmanuals.com

www.midwestmanuals.com

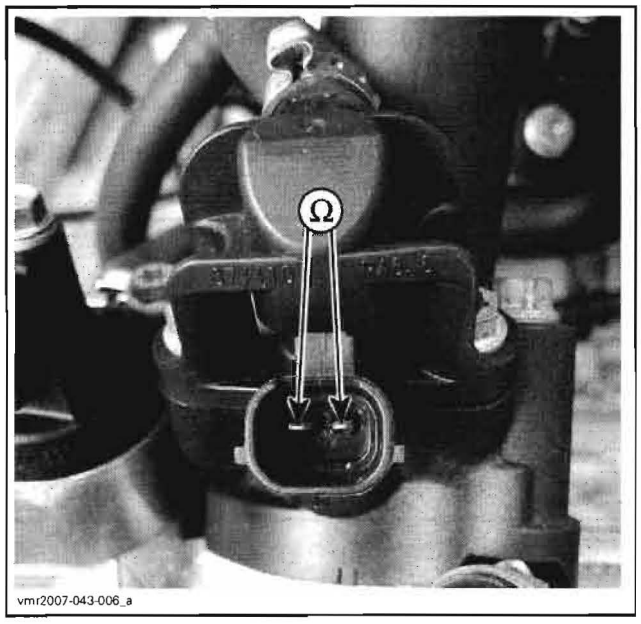

vmr2007-043-006_a

If readings are out of specifications, replace injector.

If readings are good, repair/replace wiring going to injector.

Fuel Injector Replacement

Removal

Before removing the injector, the fuel rail has to be removed from the engine. Refer to *FUEL RAIL* for the procedure.

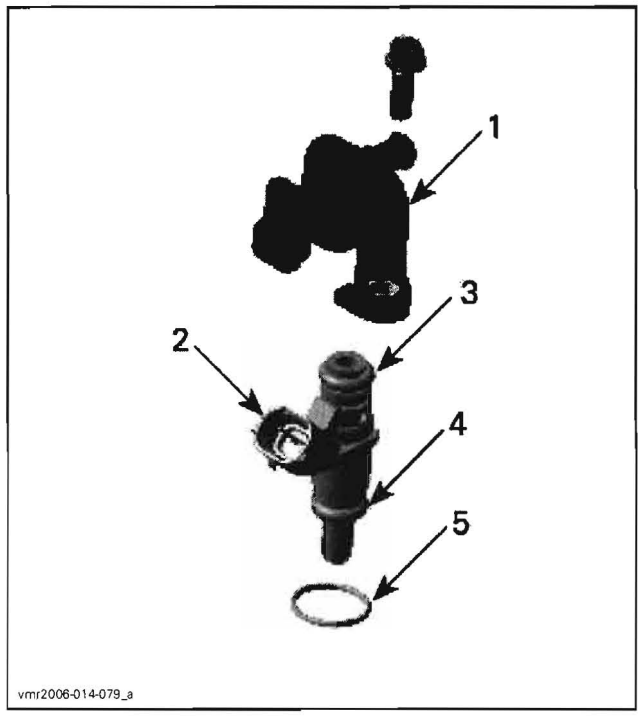

vmr2006-014-079_a

FUEL RAIL ASS'Y
1. *Fuel rail*
2. *Fuel injector*
3. *Injector top O-ring*
4. *Injector bottom O-ring*
5. *Manifold O-ring*

The fuel injector can be easily pulled out of the fuel rail.

Installation

For the installation, reverse the removal procedure. Pay attention to the following details.

Apply a thin film of engine oil to O-rings to ease insertion in rail.

Install new O-rings, if you reinstall a used injector then insert the fuel injector in place with your hand. Do not use any tool.

Position the manifold O-ring as shown on injector.

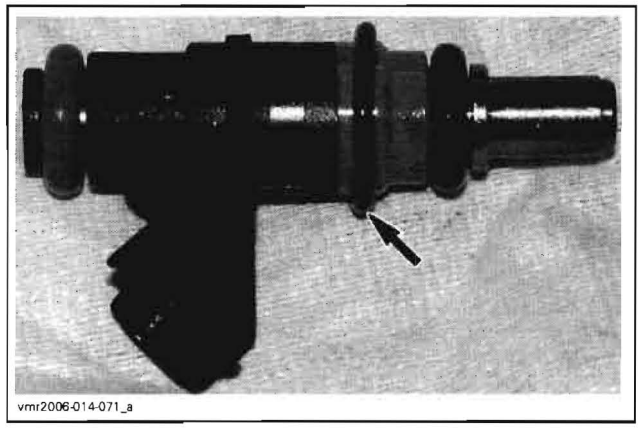
vmr2006-014-071_a

www.midwestmanuals.com
Sales@midwestmanuals.com

www.midwestmanuals.com

Carefully insert injector in manifold paying attention to the manifold O-ring. Gently push in evenly all around while inserting injector. O-ring must be completely inserted and not visible, before finishing pushing injector.

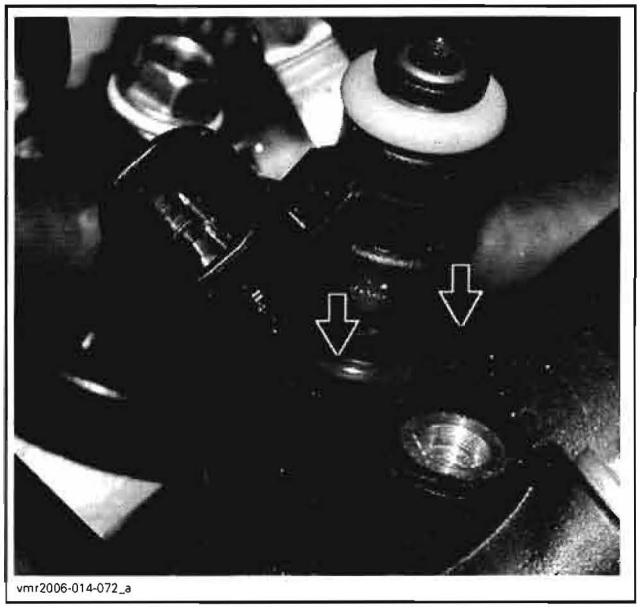
vmr2006-014-072_a

Firmly push injector until it bottoms.

Reinstall fuel rail. See above.

FUEL RAIL

Pressure at fuel rails is supplied and controlled by the fuel pump module. Refer to *FUEL TANK AND FUEL PUMP* for pressure test.

Fuel Rail Replacement

Removal

Disable fuel pump using B.U.D.S. Look in the **Activation** tab.

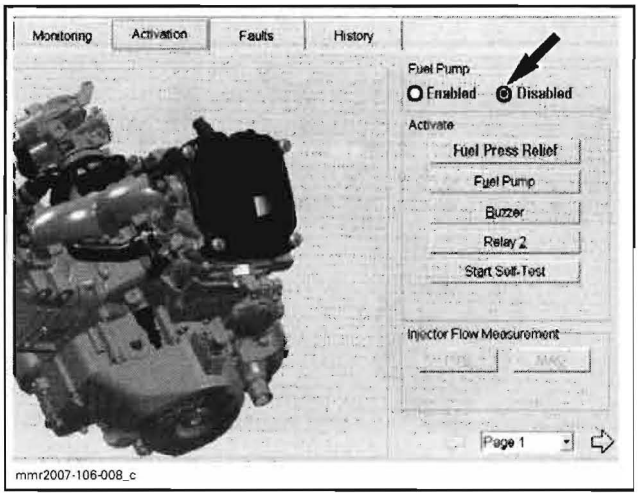

mmr2007-106-008_c

Release fuel pressure by running engine until it runs out of gas.

Turn ignition key off.

Wrap a rag around the inlet hose and release the quick fitting.

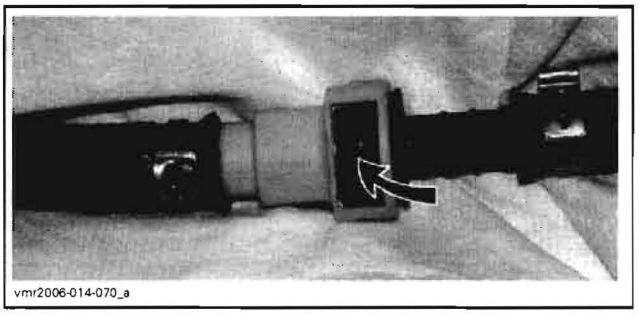
vmr2006-014-070_a

Unscrew rail retaining screws.

Gently pull rail up by hand.

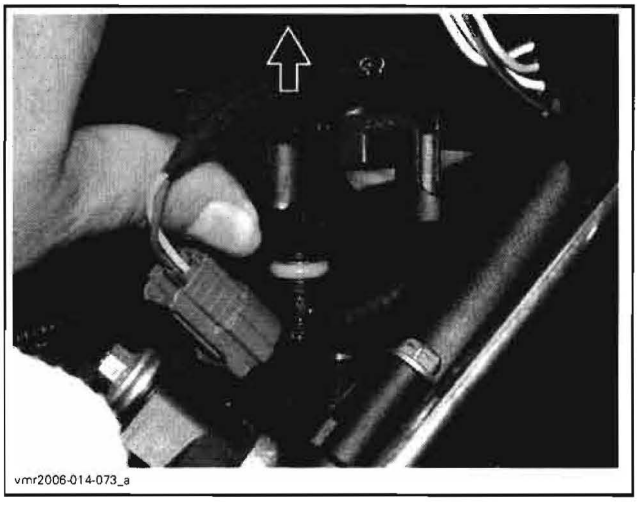
vmr2006-014-073_a

To disconnect fuel rail, cut clamp on fuel hose using pliers (P/N 295 000 070). Refer to *FUEL TANK AND FUEL PUMP* for clamp removal/installation procedures.

NOTE: If fuel rail is removed purposely to access fuel injector, it is not necessary to cut hose clamp. Only to replace fuel rail.

Installation

For installation, reverse the removal process but pay attention to the following.

Install new clamps using pliers as per removal (if fuel rail was replaced).

A thin film of injection oil should be applied to O-rings of fuel injector to ease installation of fuel rail.

Install new O-rings.

Install fuel rail and evenly tighten screws a little at a time each side.

www.midwestmanuals.com
Sales@midwestmanuals.com

www.midwestmanuals.com

Tightening torque of the rail retaining screws is 6 N•m (53 lbf•**in**).

After securing inlet hose at quick fitting, re-enable fuel pump using B.U.D.S.

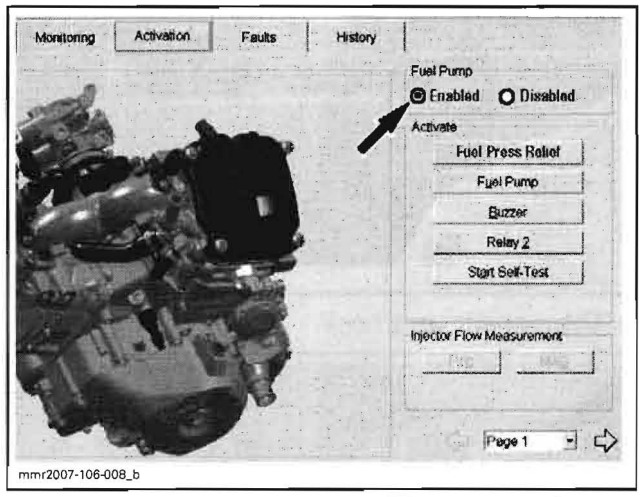

mmr2007-106-008_b

⚠ WARNING

Perform a fuel pressure test and ensure that there is no leak. Refer to *FUEL TANK AND FUEL PUMP*. Run engine and check for leaks.

THROTTLE BODY

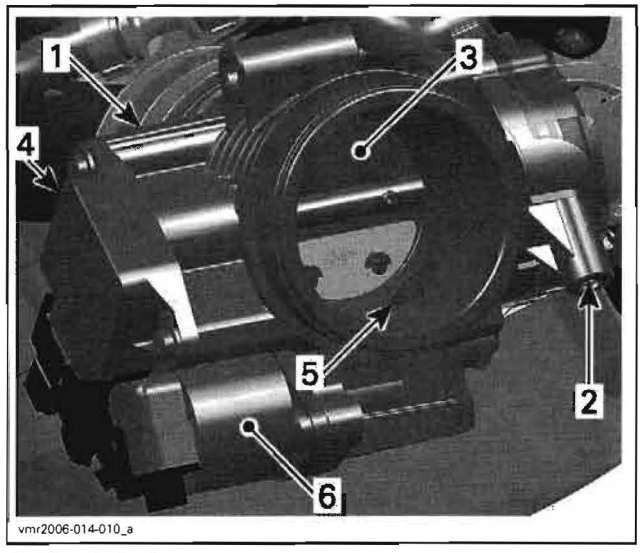

vmr2006-014-010_a

1. *Throttle body*
2. *Throttle cable attachment*
3. *Throttle plate*
4. *TPS*
5. *Idle bypass channel*
6. *Idle bypass valve*

Mechanical Inspection

Check that the throttle plate moves freely and smoothly when depressing throttle lever.

IMPORTANT: Never attempt to adjust the sealed idle stop screw. It is calibrated at the factory. If the screw adjustment is changed, the throttle body must be replaced.

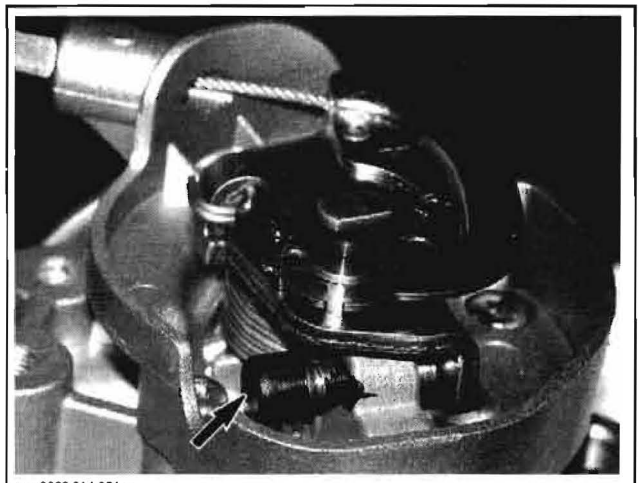
vmr2006-014-064_c

Before replacing any part, check the following as these could be causing the fault. Perform the test while the engine is off.

- Throttle cable adjustment too tight. Not returning fully to idle stop.
- Throttle body idle set screw is loose or worn.
- TPS is loose.
- Idle bypass valve is loose.
- Corroded or damaged wiring or connectors.
- Throttle body has been replaced and the **Closed Throttle and Idle Actuator** reset has not been performed.
- ECM has been replaced and the **Closed Throttle and Idle Actuator** reset has not been performed.

Electrical Inspection

Refer to *THROTTLE POSITION SENSOR (TPS)* and *IDLE BYPASS VALVE* in this section.

Throttle Body Replacement

Removal

To remove the throttle body from engine, proceed as follows:

- Remove side panels, center panel and dashboard. Refer to *BODY*.
- Remove air box retaining fasteners.

www.midwestmanuals.com
Sales@midwestmanuals.com

www.midwestmanuals.com

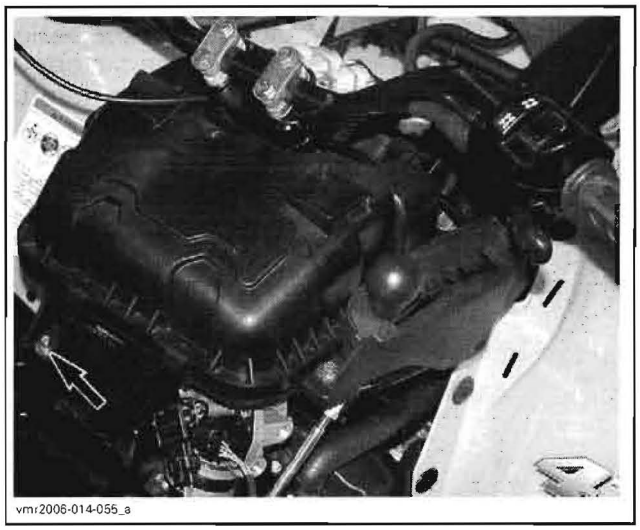
vmr2006-014-055_a

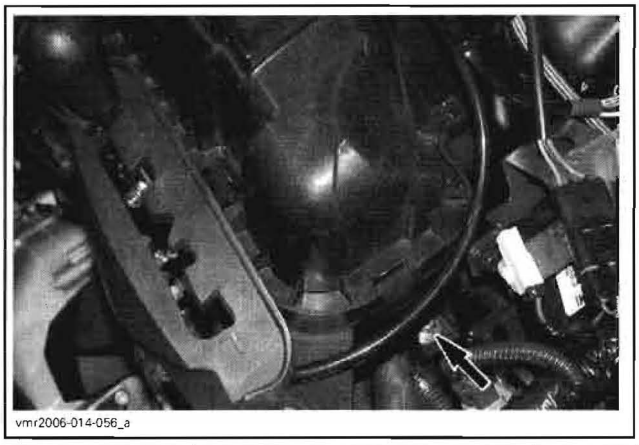
vmr2006-014-056_a

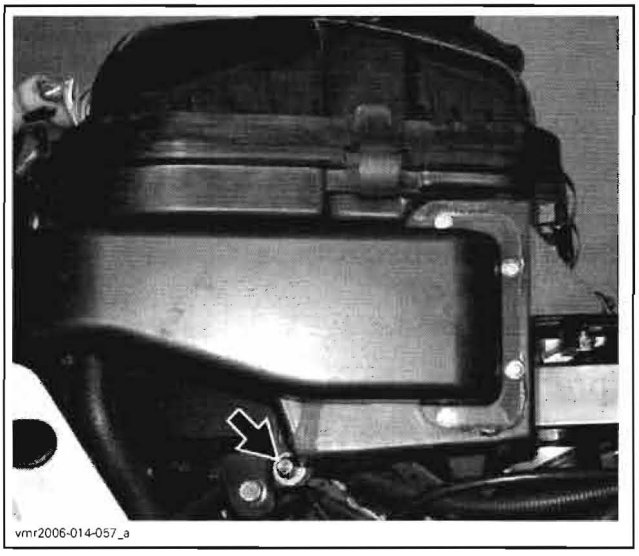
vmr2006-014-057_a

– Remove dart.

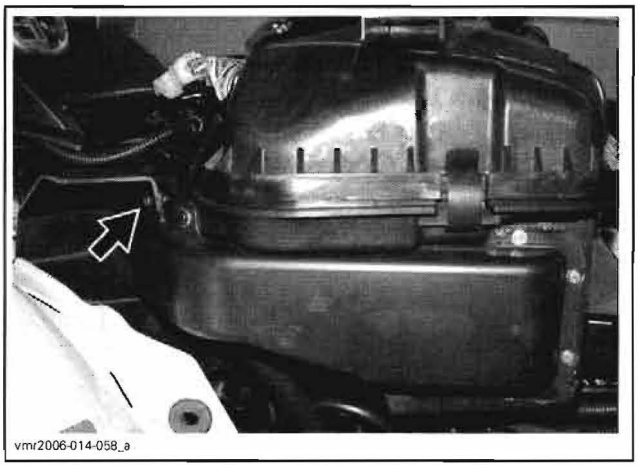
vmr2006-014-058_a

– Disconnect vent hose.

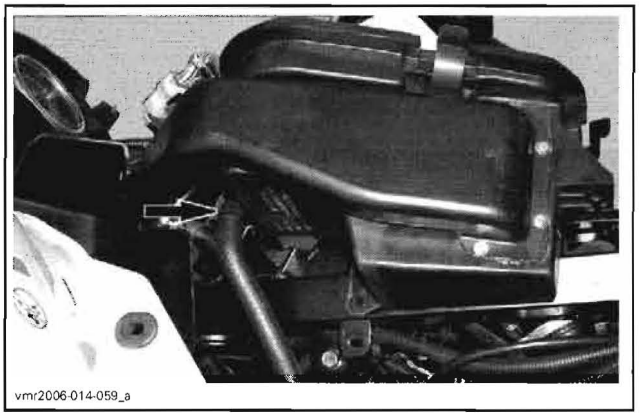
vmr2006-014-059_a

– Detach throttle cable from shifter panel.

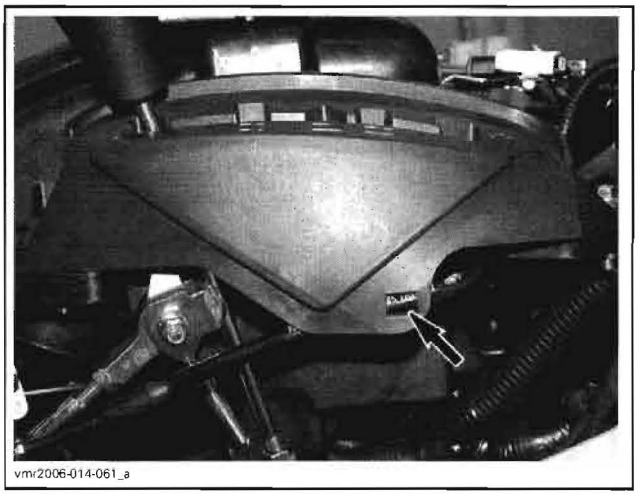
vmr2006-014-061_a

– Disconnect TPS and idle bypass valve connectors.
– Detach throttle body from intake manifold.

www.midwestmanuals.com
Sales@midwestmanuals.com

www.midwestmanuals.com

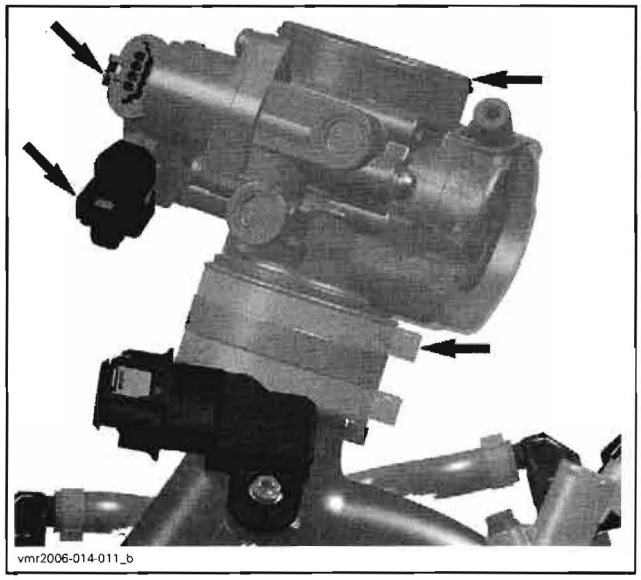
vmr2006-014-011_b

- Gently move throttle body away to detach throttle cable.
- Remove throttle body cover.
- Detach throttle cable.

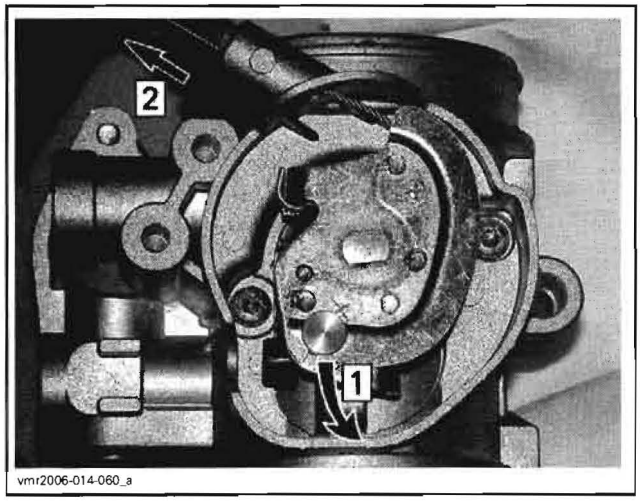

vmr2006-014-060_a

Installation

Installation of the new throttle body is the reverse of the removal procedure. Pay attention for the following details.

Properly install cable barrel to throttle cable end.

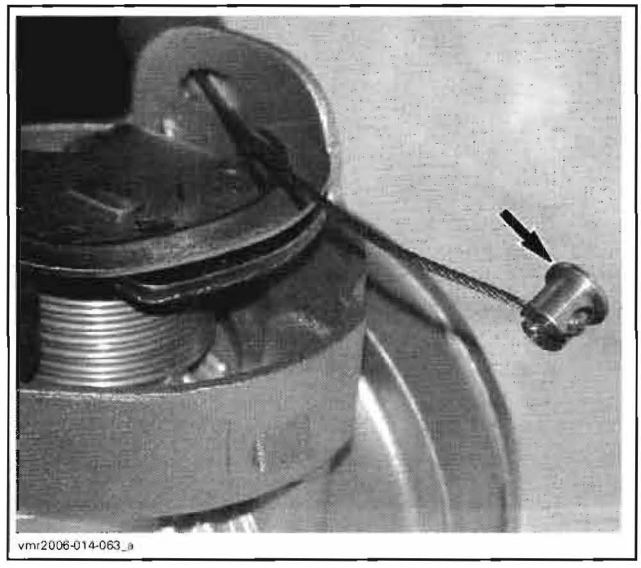
vmr2006-014-063_a

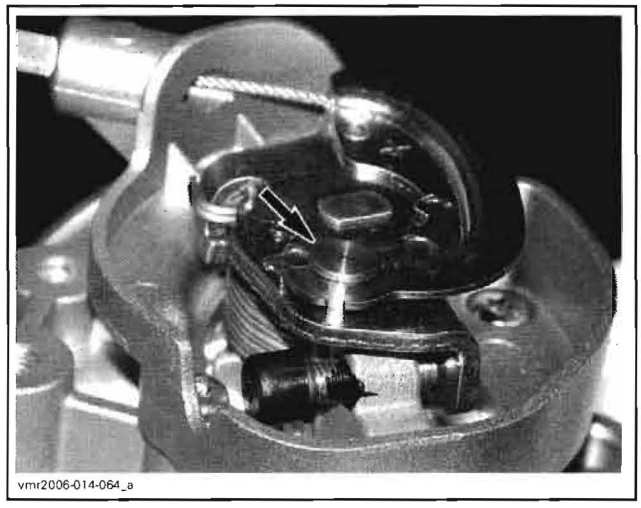
vmr2006-014-064_a

Do not reinstall cover yet.

Install throttle body on intake manifold. Ensure to index throttle body tab with boot notch.

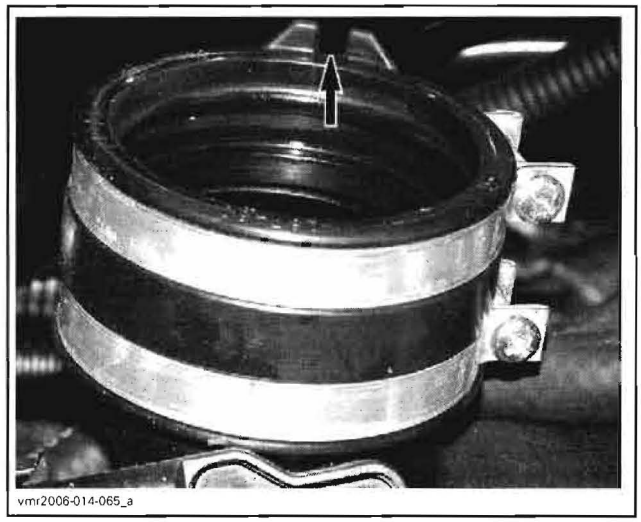
vmr2006-014-065_a

www.midwestmanuals.com
Sales@midwestmanuals.com

www.midwestmanuals.com

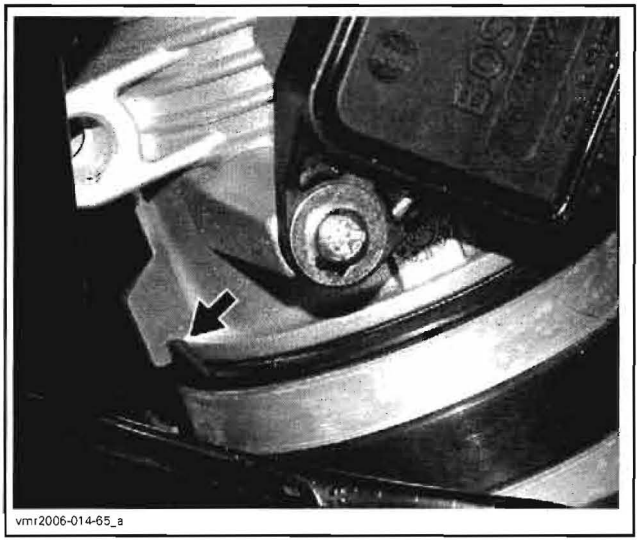
vmr2006-014-65_a

Clip throttle cable to shifter panel.

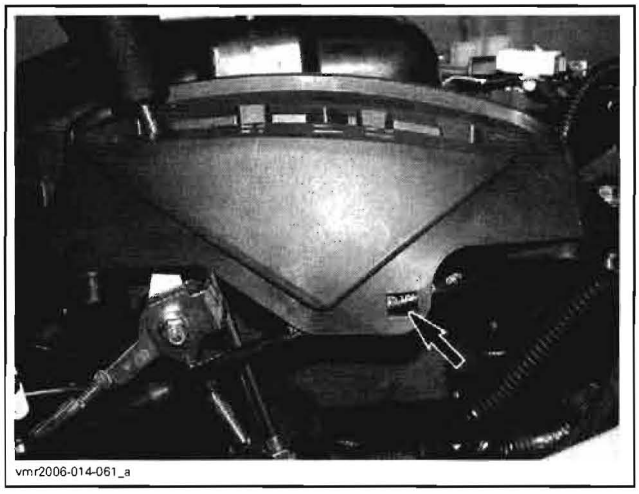
vmr2006-014-061_a

Gently pull throttle cable toward rear to have a gap between cable and shifter mechanism.

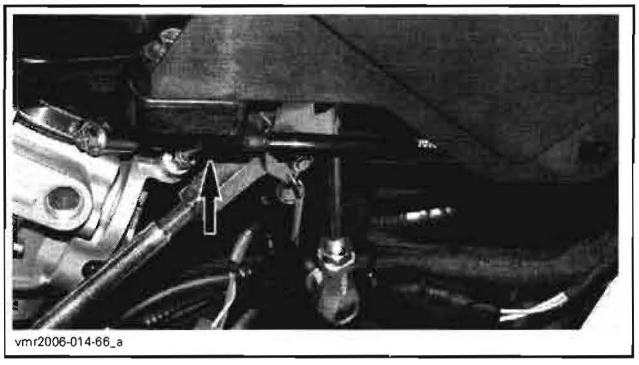
vmr2006-014-66_a

GAP HERE

⚠ WARNING

Ensure shifter mechanism does not touch throttle cable. Depress throttle lever several times to ensure it properly returns.

For TPS and idle bypass valve replacement procedures, refer to the respective paragraph in this section.

Adjustment

When the throttle body has been replaced, perform throttle cable adjustment and the **Closed Throttle and Idle Actuator** reset. Refer to *BASIC ADJUSTMENTS* in this section.

THROTTLE POSITION SENSOR (TPS)

General

The throttle position sensor (TPS) is a potentiometer that sends a signal to the ECM which is proportional to the throttle shaft angle.

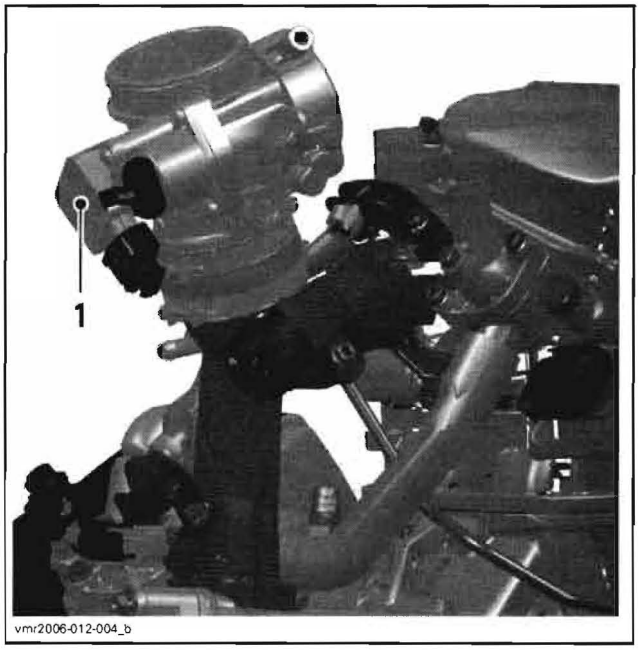

vmr2006-012-004_b

1. Throttle position sensor (TPS)

IMPORTANT: Prior to testing the TPS, ensure that mechanical components/adjustments of throttle body are adequate.

The EMS may generate several fault codes pertaining to the TPS. Refer to *EMS DIAGNOSTIC* section for more information.

TPS Wear Test

While engine is not running, activate throttle and pay attention for smooth operation without physical stops of the cable.

Using the B.U.D.S. software, use the **Throttle Opening** display under **Monitoring**.

www.midwestmanuals.com
Sales@midwestmanuals.com

www.midwestmanuals.com

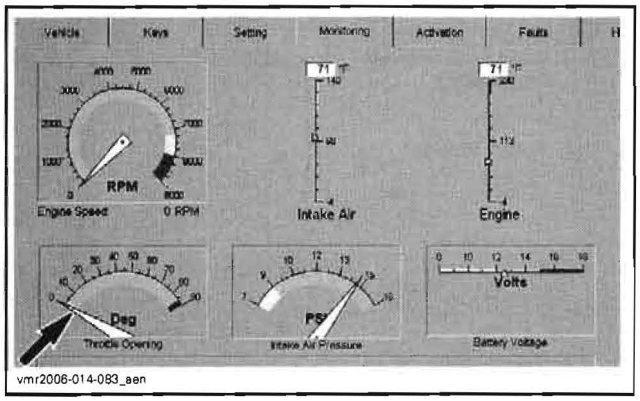

vmr2006-014-083_aen

Slowly and regularly depress the throttle. Observe the needle movement. It must change gradually and regularly as you move the throttle. If the needle "sticks", bounces, suddenly drops or if any discrepancy between the throttle movement and the needle movement is noticed, it indicates that the TPS needs to be replaced or the computer used may be too slow to transfer data fast enough for real time display.

TPS Resistance Test

Ensure TPS is connected to wiring harness.

Disconnect the connector "A" from the ECM.

Using a multimeter, check resistance values on ECM connector as per the following table.

ECM CONNECTOR		THROTTLE IDLE POSITION	WIDE OPEN THROTTLE POSITION
PIN		RESISTANCE Ω @ 20°C (68°F)	
A-24	A-25	710 - 1300	2600 - 2700
A-25	A-39	1600 - 2400	1600 - 2400
A-24	A-39	2600 - 2700	710 - 1300

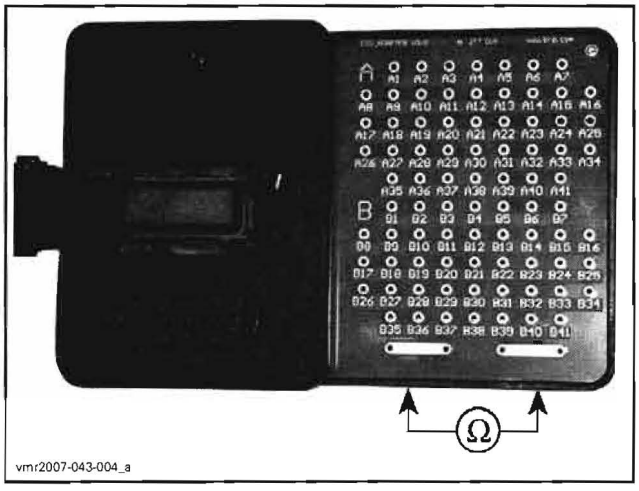

vmr2007-043-004_a

NOTE: The resistance value should change smoothly and proportionally to throttle movement. Otherwise, replace TPS.

If resistance values are correct, perform the *VOLTAGE TEST* below.

If resistance values are incorrect, check wiring harness. If wiring is faulty, repair/replace. If wiring is good, replace TPS.

Reconnect ECM connector.

TPS Input Voltage Test

Disconnect connector from TPS.

Turn ignition key ON and set engine run/stop switch to RUN.

Check the voltage readings from harness connector as follows.

CONNECTION	VOLTAGE
Pin 1 with battery ground	5.0 V
Pin 2 with battery ground	0 V
Pin 3 with battery ground	4.75 - 5 V

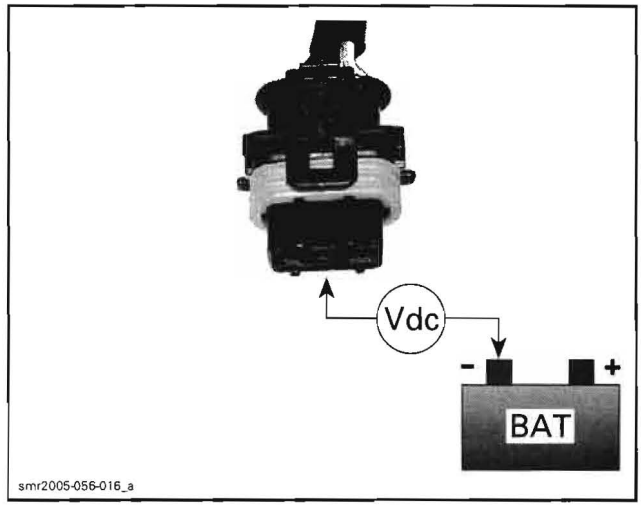

smr2005-056-016_a

If voltage test is not good, check/repair wiring harness. If wiring tests good, refer to *ECM REPLACEMENT*.

If voltage test is good, everything is in order (assuming resistance test was performed).

TPS Replacement

Remove center panel and dashboard. Refer to *BODY*.

Loosen two screws retaining the TPS.

Remove TPS.

www.midwestmanuals.com
Sales@midwestmanuals.com

www.midwestmanuals.com

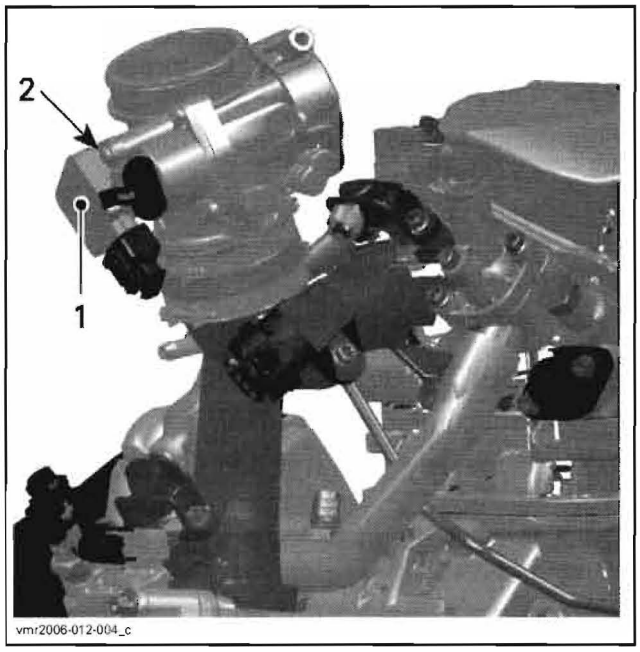

THROTTLE BODY
1. *Throttle position sensor (TPS)*
2. *Screws*

Install the new TPS.

Apply Loctite 243 (P/N 293 800 060) on the TPS retaining screws, then torque to 3 N•m (27 lbf•**in**).

Reinstall remaining removed parts.

Proceed with the **Closed Throttle and Idle Actuator Reset**. See *BASIC ADJUSTMENTS* at the beginning of this section.

IDLE BYPASS VALVE (IBV)

An idle bypass valve with good resistance measurement can still be faulty. It is also possible that a mechanical failure occurs which is not detectable without measuring the air flow. Replacing the idle bypass valve may be necessary as a test.

IBV Information in B.U.D.S. Software

The IBV position (Idle Bypass Valve) is displayed for information purposes only.

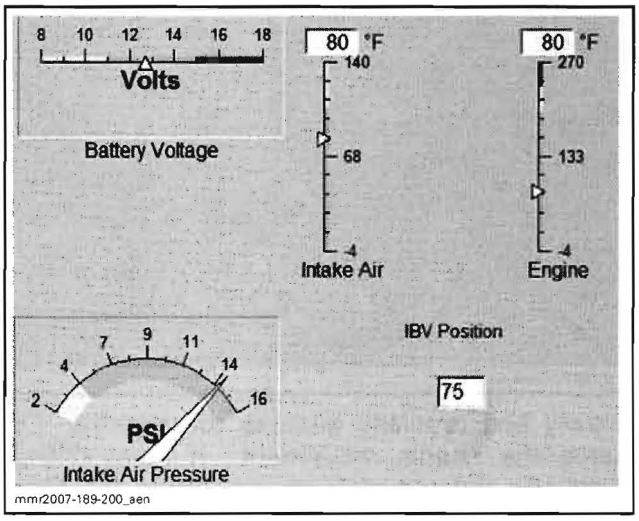

This value implies no maintenance, it is NOT adjustable.

The IBV is controlled by a stepper motor (via the ECM) and the value given is the position of the stepper motor.

The value is given in steps. See chart.

IBV STEPS IN B.U.D.S.	VALVE POSITION
0	Fully closed
Typical values: 25 - 50 (1)	Partially open
150	Fully open

(1) Typical IBV values at idle are given for a warm engine and vary depending on altitude, air temperature and production tolerances.

The ECM constantly controls the IBV to maintain its target idle speed when the throttle is closed.

NOTE: An engine giving an IBV position outside of this range is not necessarily faulty. It may only give clues if poor idle or light throttle behavior is experienced. Lower values may indicate a leakage in the air intake system; higher values can suggest a dirty throttle body, obstructed idle by-pass valve passage etc.

IBV Resistance Test

Disconnect idle bypass valve from the wiring harness.

Using a multimeter, check the resistance in both windings.

www.midwestmanuals.com
Sales@midwestmanuals.com

www.midwestmanuals.com

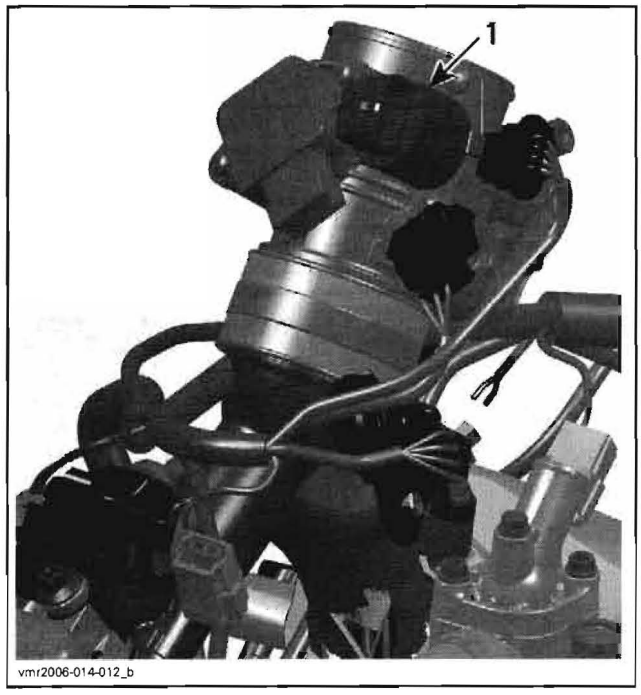

1. Idle bypass valve

Check the resistance between pins as shown.

IDLE BYPASS VALVE		MEASUREMENT
PIN		RESISTANCE Ω @ 20°C (68°F)
1	4	50
2	3	

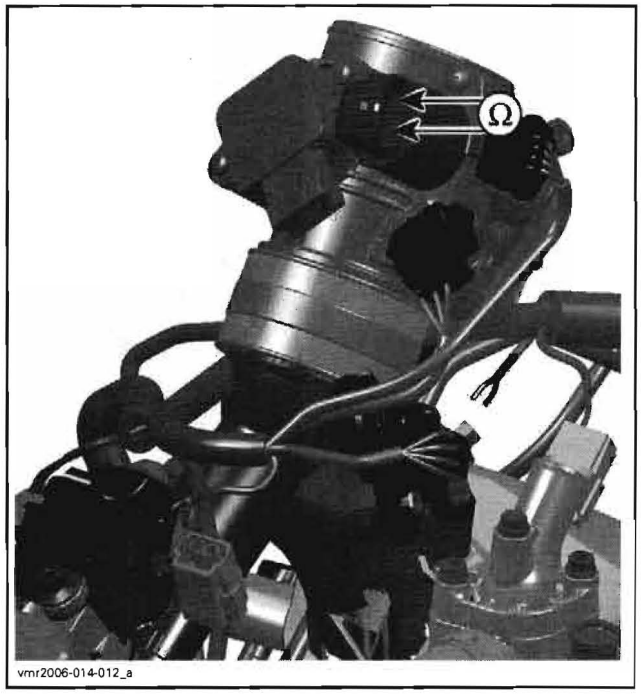

If the resistance of one or both windings is not good, replace the idle bypass valve.

If resistance test of valve windings is good, check continuity of circuits A-35, A-36, A-37, A-38. If not good, check/repair wiring/connectors.

IBV Visual Inspection

NOTE: Make sure the ignition key is turned off during the following procedure.

Remove idle bypass valve from throttle body.

Check the piston and bypass channel for dirt/deposits which can cause a sticking piston.

CAUTION: Always keep the ignition key turned OFF, while the idle bypass valve is removed.

CAUTION: Do not try to operate the piston of the idle bypass valve when it is dismounted. Also do not move the piston by hand. The drive screw is very sensitive and may be destroyed.

Using a part cleaner, clean idle bypass in throttle body from contamination then use an air gun to dry it.

⚠ WARNING

Always wear eye protector. Chemicals can cause a rash break out and injure your eyes.

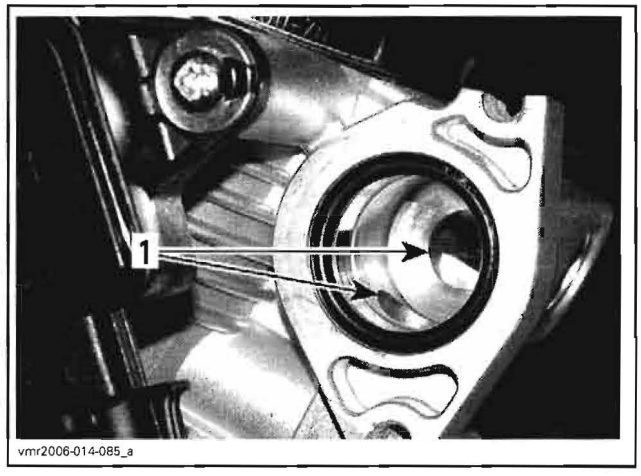

1. Clean bore from contamination

Clean all remaining parts and install the idle bypass valve on the throttle body.

Proceed with the **Closed Throttle and Idle Actuator Reset**. See procedure in *BASICS ADJUSTMENTS* at the beginning of this section.

www.midwestmanuals.com
Sales@midwestmanuals.com

www.midwestmanuals.com

CRANKSHAFT POSITION SENSOR (CPS)

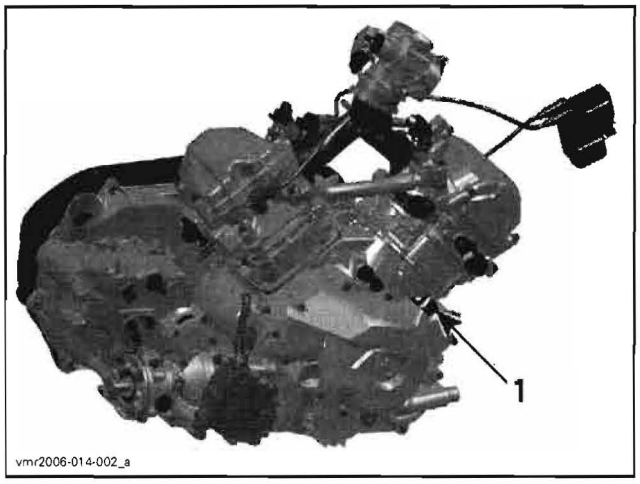

1. CPS connector

NOTE: Take into account that a CPS fault can be triggered by bent or missing encoder wheel teeth. First check fault codes (refer to *EMS DIAGNOSTIC*) then check the teeth condition if necessary (refer to *MAGNETO SYSTEM*).

CPS Resistance Test

Disconnect CPS wiring harness connector. Probe terminals as shown.

CPS CONNECTOR		MEASUREMENT
PIN		RESISTANCE Ω @ 20°C (68°F)
1	2	700 - 900 Ω

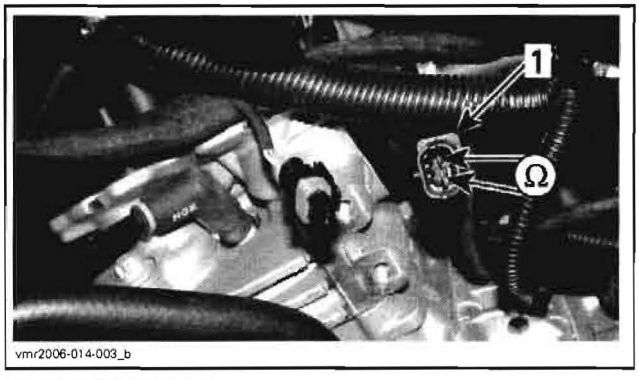

LH SIDE OF VEHICLE
1. CPS connector

If resistance is not within specifications, replace the CPS.

If resistance tests good, **reconnect** the CPS connector and disconnect the connector "A" on the ECM.

Using a multimeter, recheck resistance as per table.

ECM CONNECTOR		MEASUREMENT
PIN		RESISTANCE Ω @ 20°C (68°F)
A-5	A-19	700 - 900 Ω

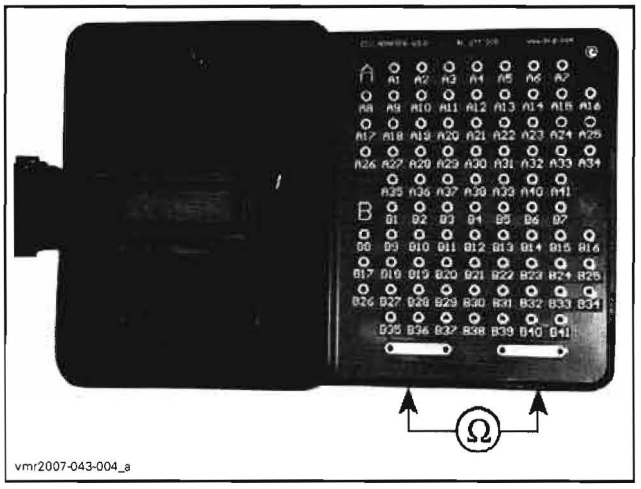

If resistance value is correct, refer to *ECM REPLACEMENT*.

If resistance value is incorrect, repair the connectors or replace the wiring harness between ECM connector and the CPS.

CPS Replacement

Unplug connector and remove CPS.

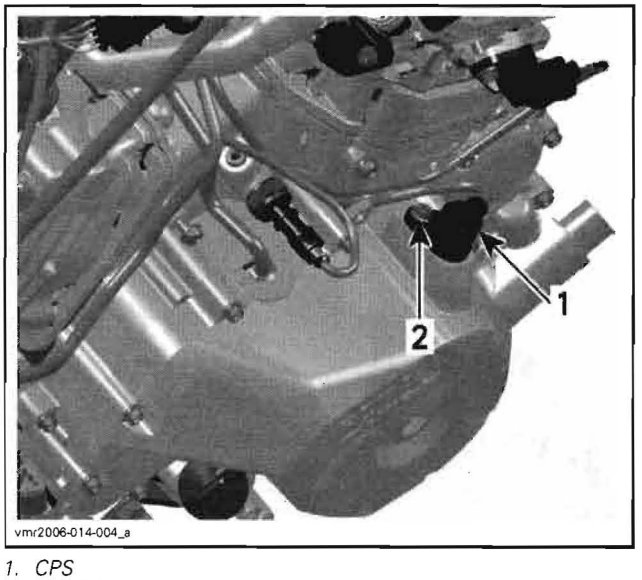

1. CPS
2. Retaining screw

Install new CPS and secure harness with a locking tie.

www.midwestmanuals.com
Sales@midwestmanuals.com

www.midwestmanuals.com

Tightening torque of the CPS retaining screws is 10 N•m (89 lbf•**in**).

CAMSHAFT POSITION SENSOR (CAPS)

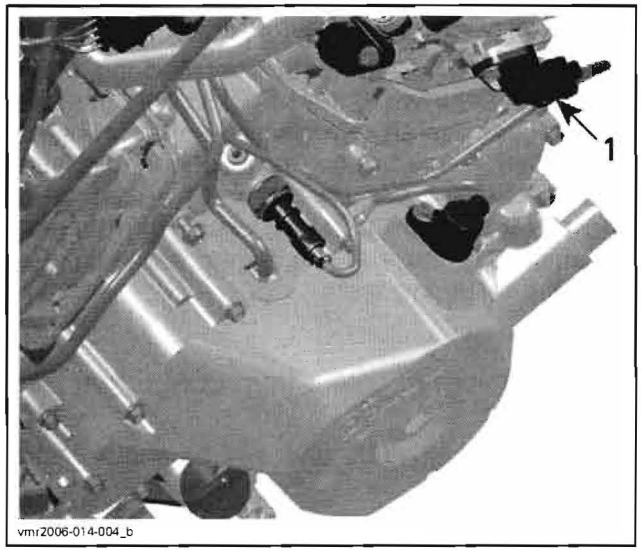

1. CAPS

CAPS Voltage Test

Turn ignition key ON and set engine run/stop switch to RUN.

Use a multimeter and set it to Vdc.

Back-probe connector and read voltage as follows.

CAPS CONNECTOR		VOLTAGE
ORANGE/GREEN	BLACK/GREEN	Battery voltage

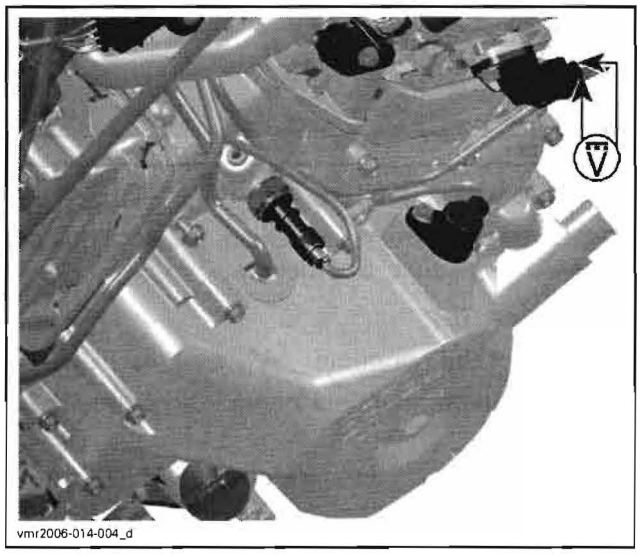

If voltage is not good, check/repair wiring/connectors.

If voltage is good, do the following test.

Remove CAPS sensor from engine.

Ensure connector is plugged.

Use a multimeter and set it to Vdc.

Back-probe connector and read voltage as follows.

CAPS CONDITION	CAPS CONNECTOR		VOLTAGE
Free	ORANGE/ GREEN	YELLOW/ GREEN	Close to 0 Vdc



CAPS CONDITION	CAPS CONNECTOR		VOLTAGE
Metallic object on sensor	ORANGE/ GREEN	YELLOW/ GREEN	Battery voltage

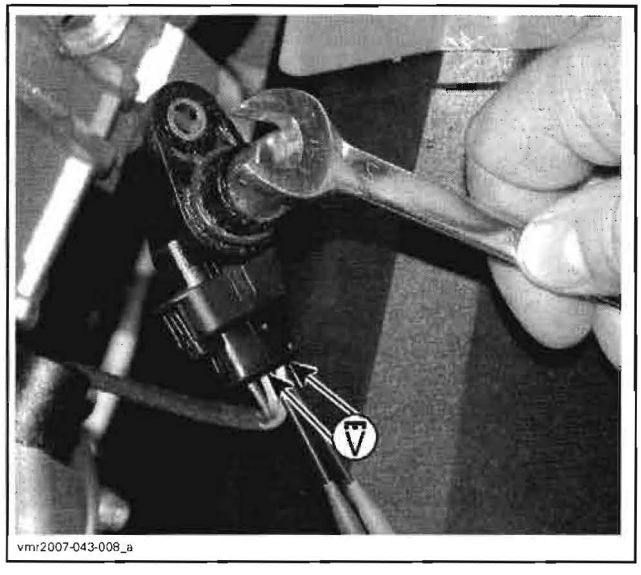

www.midwestmanuals.com
Sales@midwestmanuals.com

www.midwestmanuals.com

If voltage is appropriate, check/repair wiring/connector between sensor and ECM. If it is good, refer to *ECM REPLACEMENT*.

If voltage is wrong, try a new CAPS.

CAPS Replacement

Unscrew the retaining screw and replace the CAPS. Ensure to reinstall O-ring.

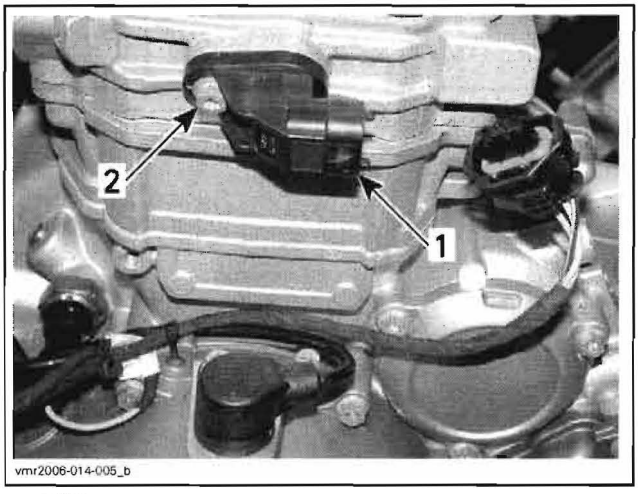

1. *CAPS*
2. *Retaining screw*

Apply Loctite 243 (P/N 293 800 060) on thread and torque to 10 N•m (89 lbf•**in**).

MANIFOLD AIR PRESSURE AND TEMPERATURE SENSOR (MAPTS)

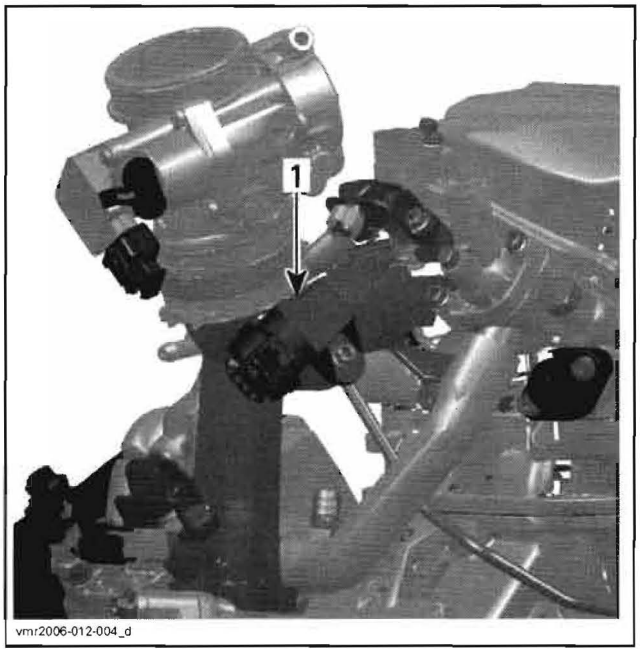

1. *Manifold air pressure and temperature sensor (MAPTS)*

NOTE: This sensor is a multifunction device.

Sensor Pressure Function

When engine is started and it runs at idle speed, the sensor takes the atmospheric pressure and stores it in the ECM. Thereafter, it takes the manifold air pressure at operating RPMs.

Ensure sensor is correctly installed on intake manifold. Otherwise, the MAPTS could generate a fault code for an unexpected sensor range at idle when it reads the atmospheric pressure. Remove sensor and check for oil or dirt on its end and if problem persists, check throttle plate condition/position and the wiring harness. Perform the following tests.

Voltage Test

Check the voltage output from ECM to the pressure sensor.

Turn ignition key ON and set engine run/stop switch to RUN.

Disconnect plug connector from MAPTS and connect a voltmeter as shown.

MAPTS CONNECTOR		MEASUREMENT
PIN		VOLTAGE
1	3	5 Vdc

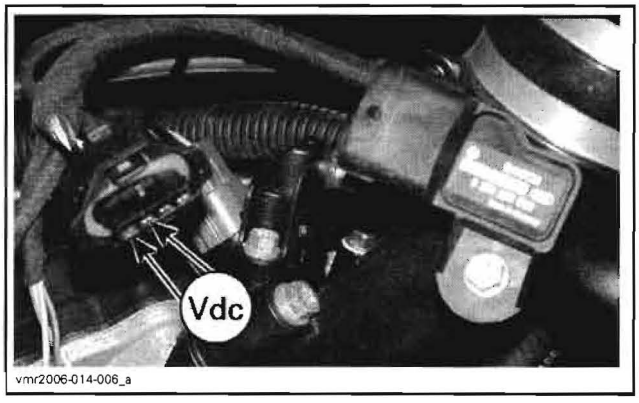

If voltage test is good, replace the MAPTS.

If voltage test is not good, check the continuity of the MAPTS circuit. See below.

Resistance Test

Disconnect the connector "A" from the ECM.

Using a multimeter, check continuity of circuits 12, 28 and 40.

If wiring harness is good, refer to *ECM REPLACEMENT*.

Otherwise, repair the connectors or replace the wiring harness between ECM connector and the MAPTS.

www.midwestmanuals.com
Sales@midwestmanuals.com

www.midwestmanuals.com

Quick Test

Using B.U.D.S. software, look the MAPTS from the **Monitoring** section and read out the pressure value while engine is stopped.

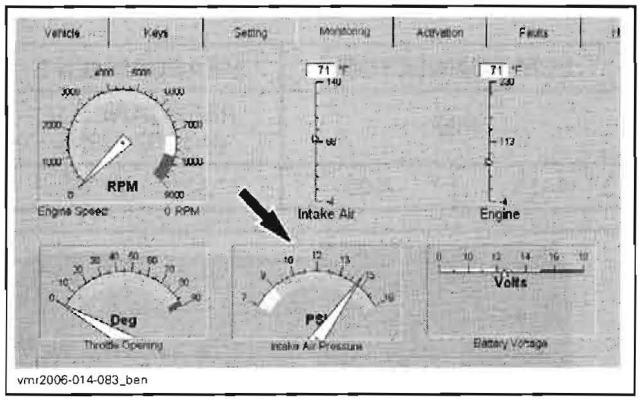

vmr2006-014-083_ben

Perform the same test with a new MAPTS and compare both readings.

Values have to be within ± 3.4 kPa (0.5 PSI).

If old MAPTS's value is out of this range, replace it.

Sensor Temperature Function

The sensor also monitors the temperature at manifold.

Resistance Test

Disconnect the connector from the MAPTS.

Using a multimeter, check the resistance of the sensor itself as shown.

MAPTS		MEASUREMENT
PIN		RESISTANCE Ω @ 20°C (68°F)
1	2	2280 - 2740

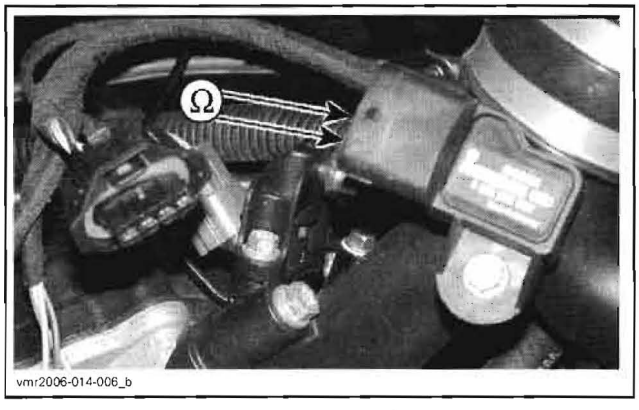

vmr2006-014-006_b

If resistance is not within specification, replace the MAPTS.

If resistance tests good, **reconnect** the MAPTS and disconnect the connector "A" from the ECM.

Using a multimeter, recheck resistance value between pins as shown.

ECM CONNECTOR		MEASUREMENT
PIN		RESISTANCE Ω @ 20°C (68°F)
A-7	A-28	2280 - 2740

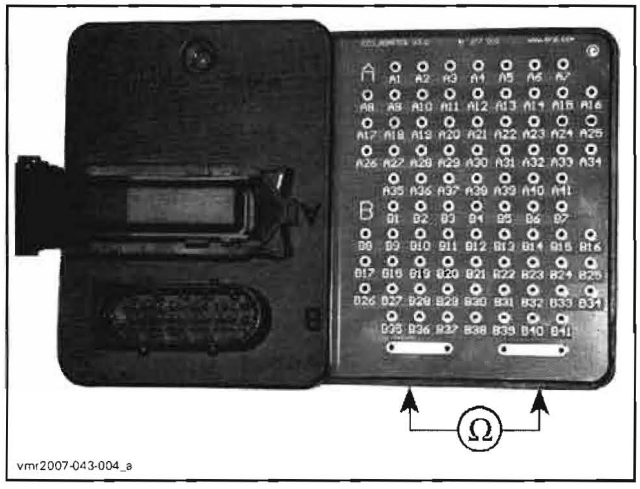

vmr2007-043-004_a

If resistance value is correct, refer to *ECM REPLACEMENT.*

If resistance value is incorrect, inspect/repair/replace wiring harness between ECM connector and the MAPTS.

MAPTS Replacement

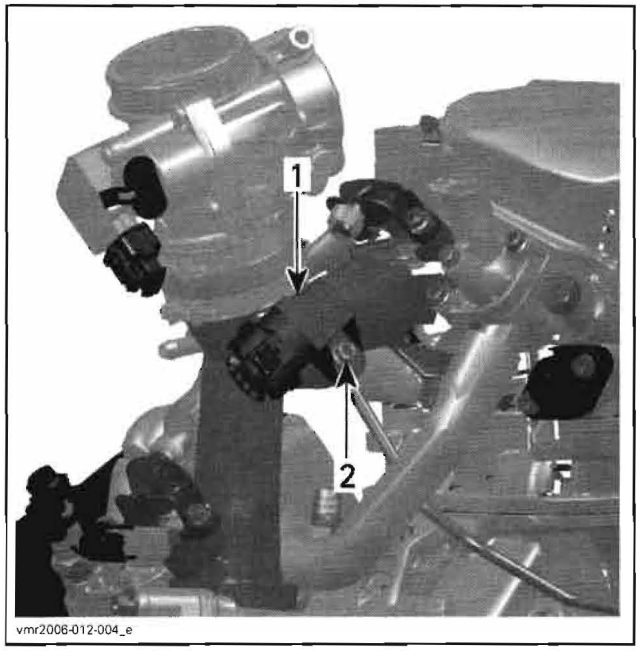

vmr2006-012-004_e

1. MAPTS
2. Retaining screw

Disconnect MAPTS connector and remove the MAPTS.

www.midwestmanuals.com
Sales@midwestmanuals.com

www.midwestmanuals.com

Apply Loctite 243 (P/N 293 800 060) on screw then torque to 6 N•m (53 lbf•**in**).

COOLANT TEMPERATURE SENSOR (CTS)

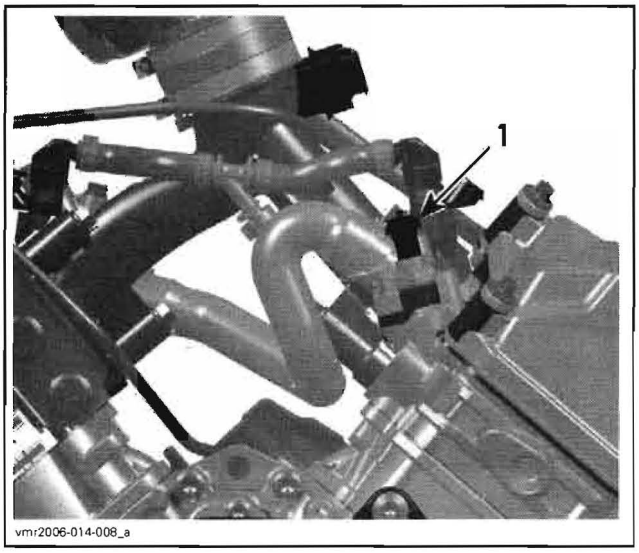

1. Coolant temperature sensor (CTS)

CTS Resistance Test

Disconnect the plug connector from the CTS and check the resistance of the sensor itself.

CTS SENSOR		MEASUREMENT
PIN		RESISTANCE Ω @ 20°C (68°F)
1	2	2280 - 2740

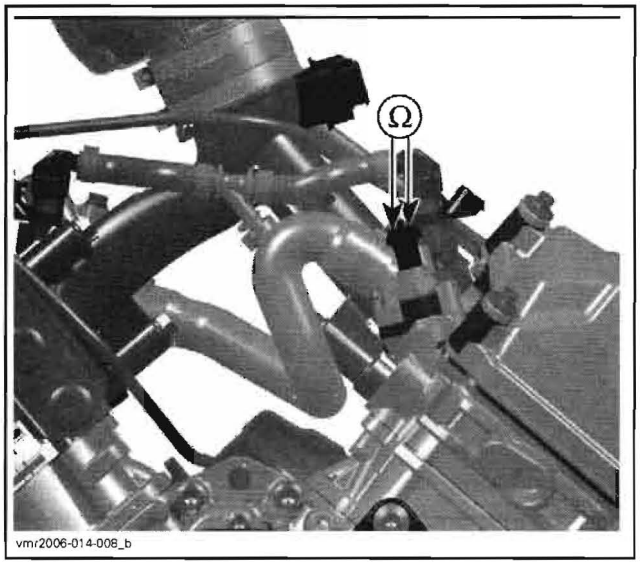

If resistance is out of specification, replace the CTS.

If resistance tests good,**reconnect** the CTS and disconnect the ECM connector "A" from the ECM.

Using a multimeter, recheck resistance on the ECM connector as per table.

ECM CONNECTOR		MEASUREMENT
PIN		RESISTANCE Ω @ 20°C (68°F)
A–11	A-27	2280 - 2736

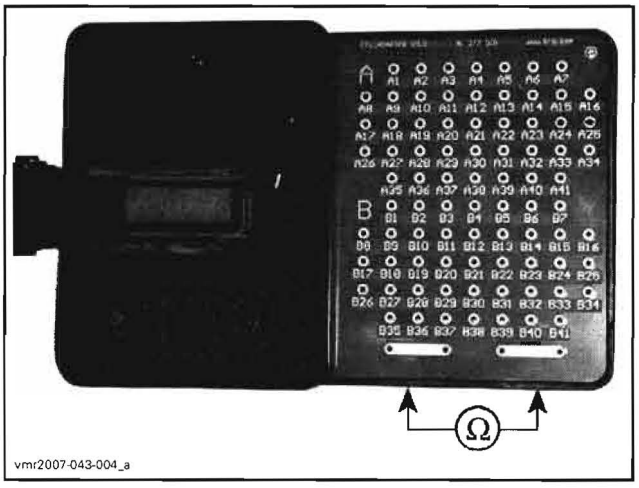

If resistance value is correct, refer to *ECM REPLACEMENT*.

If resistance value is incorrect, repair the connectors or replace the wiring harness between ECM connector and the CTS.

CTS Replacement

Disconnect CTS connector and remove CTS.

Install the new CTS and torque to 16 N•m (142 lbf•**in**).

Reinstall remaining removed parts.

Refill and bleed the cooling system, refer to *COOLING SYSTEM* subsection.

www.midwestmanuals.com
Sales@midwestmanuals.com

www.midwestmanuals.com

FUEL TANK AND FUEL PUMP

SERVICE TOOLS

Description	Part Number	Page
pliers	295 000 070	225
small hose pincher	295 000 076	221
vacuum/pressure pump	529 021 800	222
pressure gauge	529 035 709	224
T-fitting	529 036 023	224

Midwest Manuals
sales@midwestmanuals.com
www.midwestmanuals.com

www.midwestmanuals.com
Sales@midwestmanuals.com

www.midwestmanuals.com

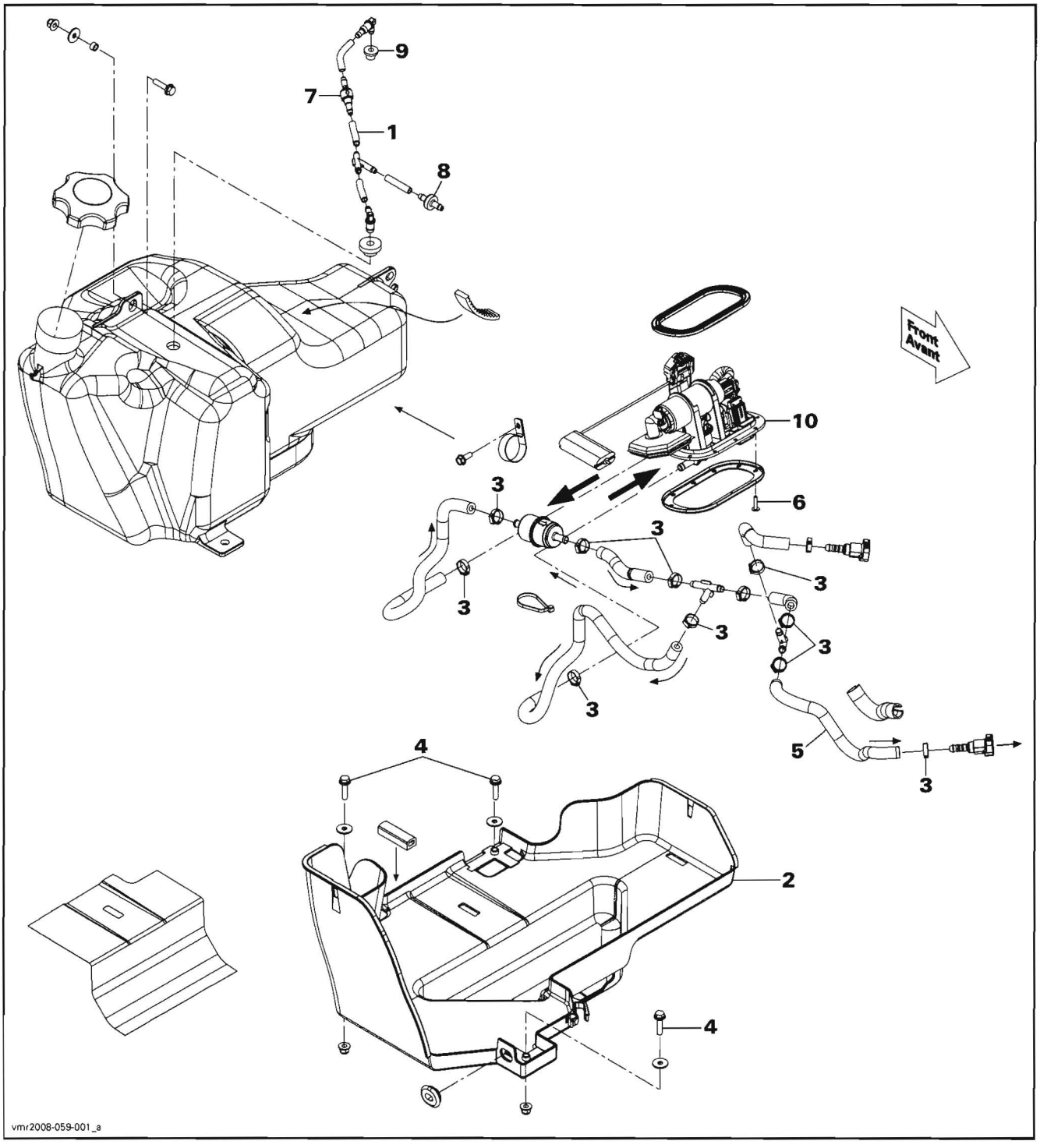

www.midwestmanuals.com
Sales@midwestmanuals.com

www.midwestmanuals.com

GENERAL

⚠ WARNING

Fuel is flammable and explosive under certain conditions. Ensure work area is well ventilated. Do not smoke or allow open flames or sparks in the vicinity.

⚠ WARNING

Always disconnect battery prior to working on the fuel system. Always disconnect battery exactly in the specified order, BLACK (-) cable first. It is recommended to disconnect electrical connections prior to disconnecting fuel lines.

Whenever working on fuel system, always verify for water or dust infiltration in reservoir.

During assembly/installation, use the torque values and service products as in the exploded views.

Clean threads before applying a threadlocker. Refer to *SELF-LOCKING FASTENERS* and *LOCTITE APPLICATION* at the beginning of this manual for complete procedure.

⚠ WARNING

Torque wrench tightening specifications must strictly be adhered to.
Locking devices (e.g.: locking tabs, elastic stop nuts, self-locking fasteners, cotter pin, etc.) must be replaced with new ones.

⚠ WARNING

The fuel system of a fuel injection system holds much more pressure than on a carbureted ATV. Prior to disconnecting a hose or to removing a component from the fuel system, follow the recommendation described here.

– Use the B.U.D.S. software to release the fuel pressure in the system. Look in the **Activation** section.

⚠ WARNING

Fuel lines remain under pressure at all times. Always proceed with care and use appropriate safety equipment when working on pressurized fuel system. Wear safety glasses. Proceed with care when removing/installing pressure test equipment or disconnecting fuel line connections. Use the B.U.D.S. software to release fuel pressure prior to removing a hose. Cover the fuel line connection with an absorbent shop rag. Slowly disconnect the fuel hose to minimize spilling. Wipe off any fuel spillage in the engine compartment. Do not allow fuel to spill on hot engine parts and/or on electrical connectors. Never use a hose pincher on injection system high pressure hoses. Replace any damaged or deteriorated fuel lines.

When the repair is completed, ensure that all hoses are connected and secured. Perform the *FUEL PRESSURE TEST* and the *FUEL TANK LEAK TEST* as explained in this section.

⚠ WARNING

Always perform the fuel pressure test if any component has been removed. A pressure test must be done before turning the ignition key to ON and setting the engine run/stop switch to RUN. The fuel pump is activated each time in these conditions. After performing a fuel pressure test, use the valve on the fuel pressure gauge to release the pressure (if so equipped).

To locate a leak, pressurize the system. Check for leaking fuel or fuel odor. Spray soapy water on all hose connections and injectors. Air bubbles will show the leaking area.

INSPECTION

FUEL TANK LEAK TEST

⚠ WARNING

Ensure to also perform the fuel pressure test.

Fill up fuel tank.

Remove the RH side panel. Refer to *BODY*.

Install a small hose pincher (P/N 295 000 076) on vent line (OUTLET side) **no. 1**.

www.midwestmanuals.com
Sales@midwestmanuals.com

www.midwestmanuals.com

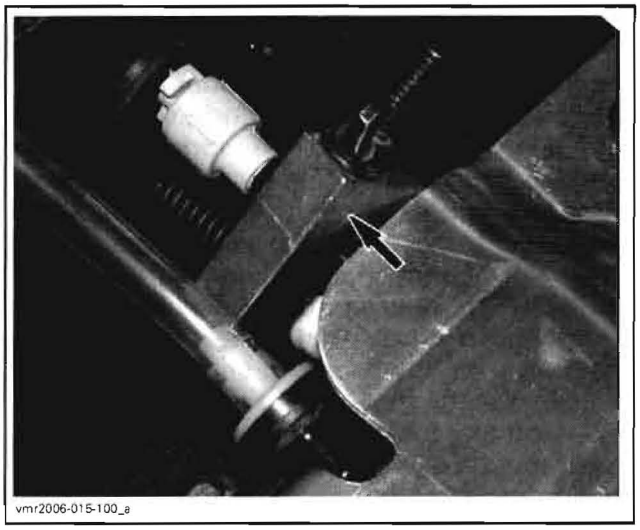

PINCHER ON OUTLET SIDE

Using the vacuum/pressure pump (P/N 529 021 800), pressurize fuel tank through vent line (INLET side).

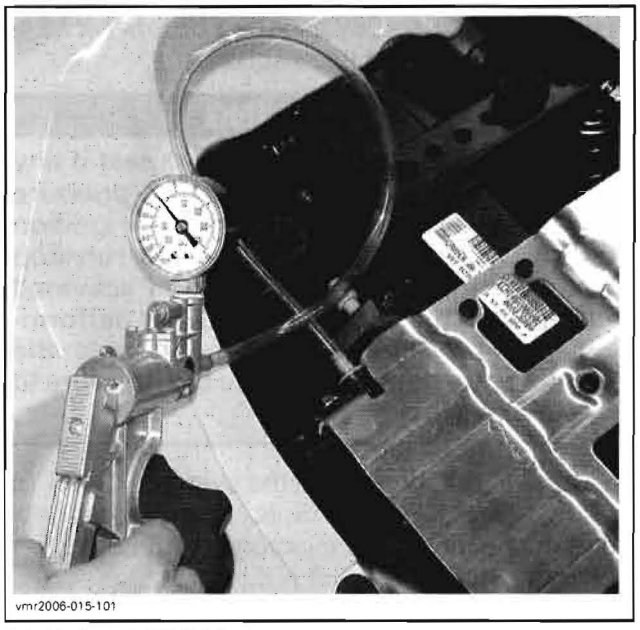

PUMP ON INLET SIDE

Pressurize fuel tank as follows.

PRESSURE	TIME WITHOUT PRESSURE DROP
21 kPa (3 PSI)	3 minutes

If pressure drops, locate fuel leak(s) and repair/replace leaking component(s).

To ease locating leak(s), spray soapy water on components; bubbles will indicate leak location(s).

Check Valve and Pressure Relief Valve

Operation

Air can enter fuel tank at all times through INLET side (check valve).

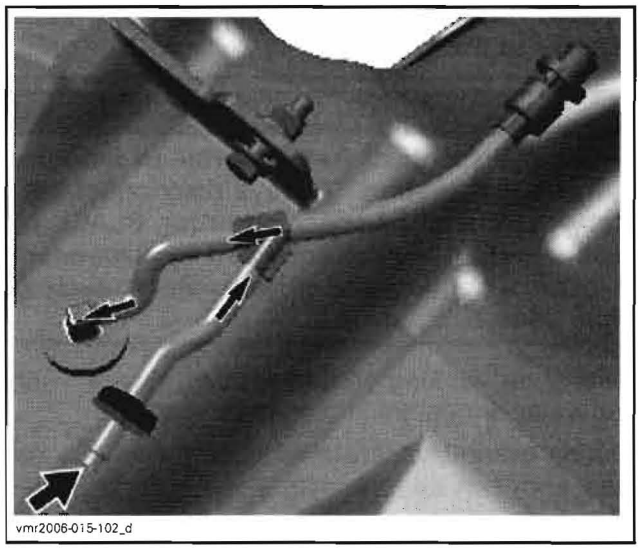

The **check valve** prevents fuel to flow out.

Air cannot go out through pressure relief valve.

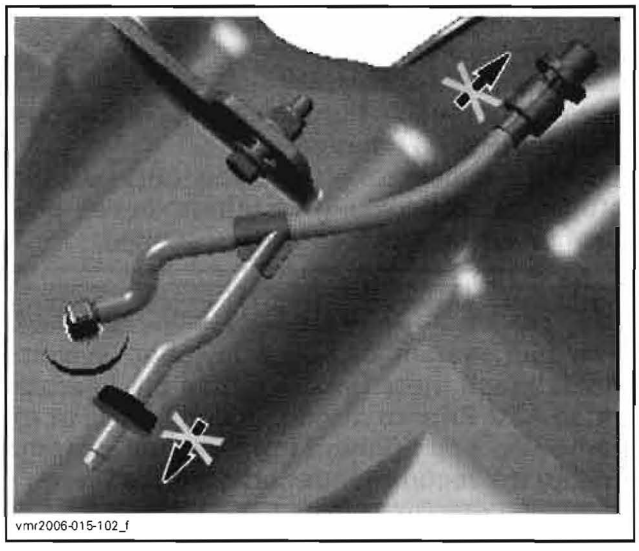

If pressure in fuel tank builds up and exceeds 2.5 - 7.6 kPa (.36 - 1.1 PSI), **pressure relief valve** opens and let excess pressure evacuate through OUTLET side.

www.midwestmanuals.com
Sales@midwestmanuals.com

www.midwestmanuals.com

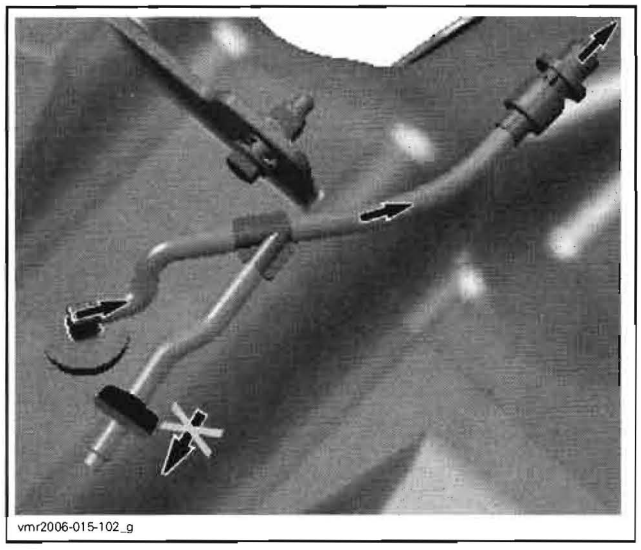
vmr2006-015-102_g

Test

While tank is still pressurized from the above test, do the following:

When removing hose pincher, alternately touch and release end of pressure relief valve **no. 7**. You should feel pressurized air flowing out indicating relief valve is working.

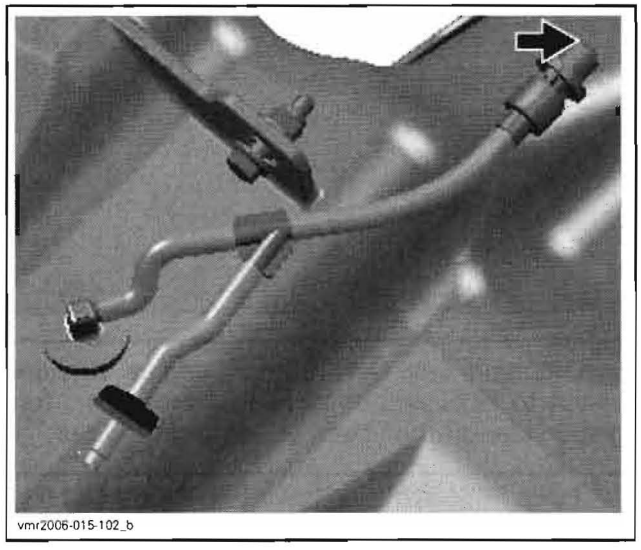
vmr2006-015-102_b

Ensure grommet **no. 9** is not plugged.

Remove fuel tank cap.

Blow air from outlet nipple. Air must freely flows towards fuel tank neck.

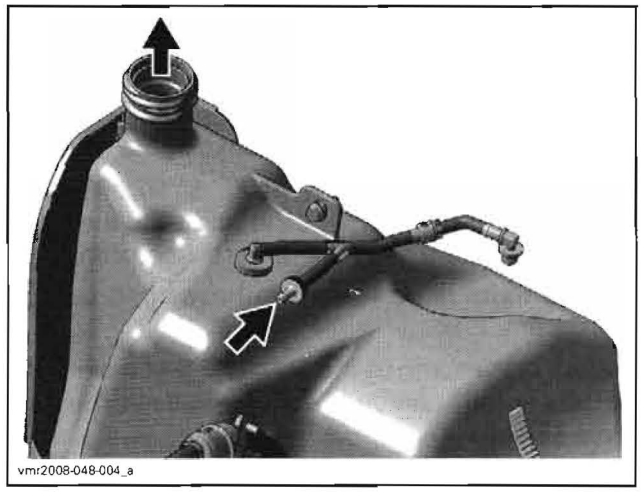
vmr2008-048-004_a

Installation

Always reinstall check valve with the black side as shown.

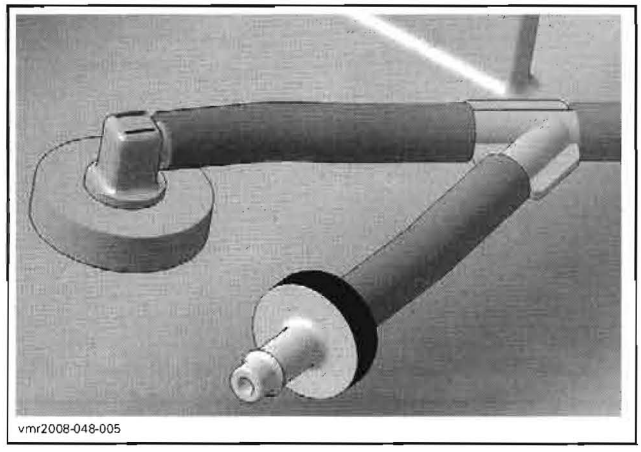
vmr2008-048-005

Always reinstall pressure relief valve according to arrow on valve as shown.

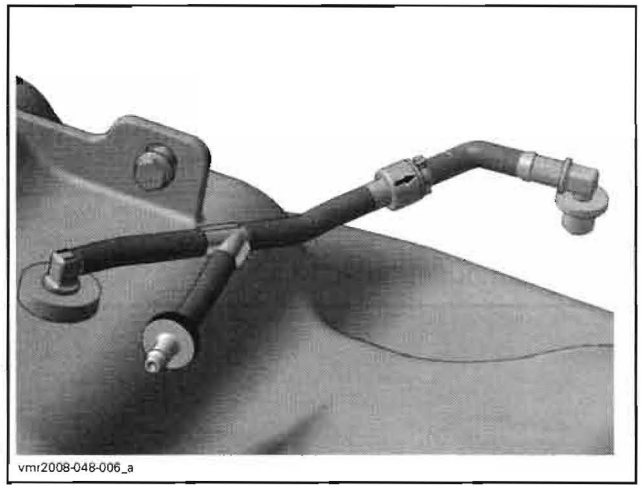
vmr2008-048-006_a

www.midwestmanuals.com
Sales@midwestmanuals.com

www.midwestmanuals.com

FUEL PRESSURE TEST

The pressure test will show the available pressure at the fuel pump outlet. It validates the pressure regulator, the fuel pump and leaks in the system.

NOTE: Refer also to the *FUEL SYSTEM DIAGNOSTIC FLOW CHART* at the end of this section to help diagnose a fuel system related problem.

Ensure there is no leak from hoses and fittings. Repair any leak.

Before proceeding to the pressure test ensure the battery is fully charged. Battery voltage must be over 12 volts.

Disable fuel pump using B.U.D.S. Look in the **Activation** tab and select **Disabled**.

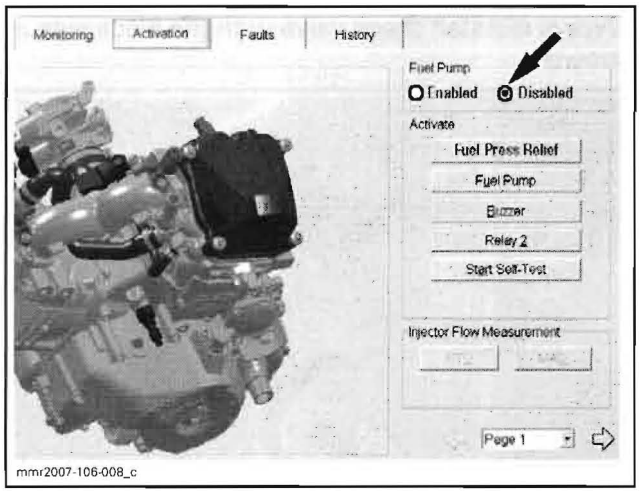

Release fuel pressure by running engine until it runs out of gas.

⚠ WARNING

The fuel hose may be under pressure. Cover the fuel line connection with an absorbent shop rag. Slowly disconnect the fuel hose to release the pressure. Wipe off any fuel spillage inside engine compartment.

Ensure there is enough gas in fuel tank.

Disconnect outlet hose.

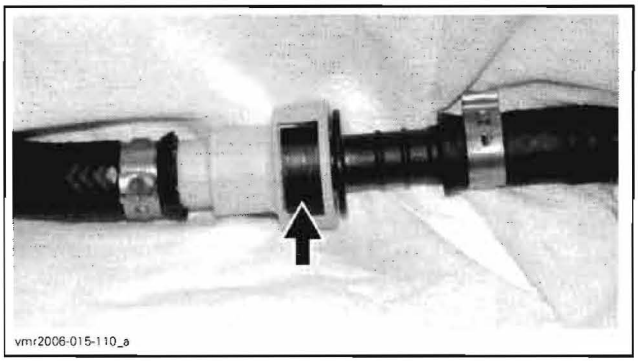

Install fuel pressure gauge (P/N 529 035 709) and T-fitting (P/N 529 036 023) between disconnected hoses (in-line installation).

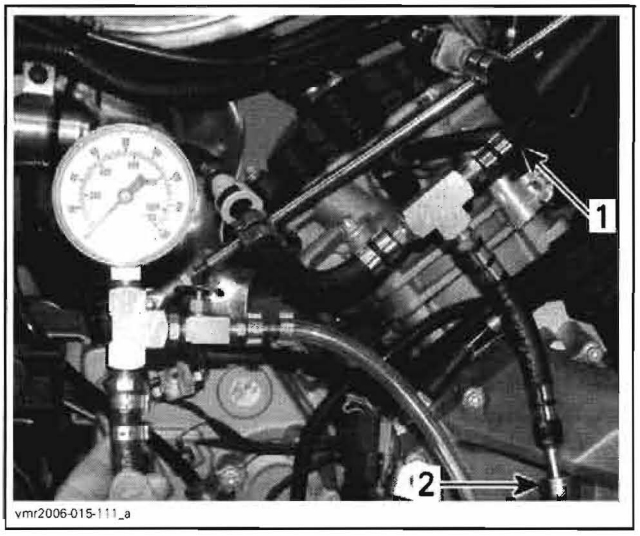

1. *T-fitting — In-line installation*
2. *Fuel pressure gauge connection*

Using B.U.D.S., reactivate fuel pump by selecting **Enabled**.

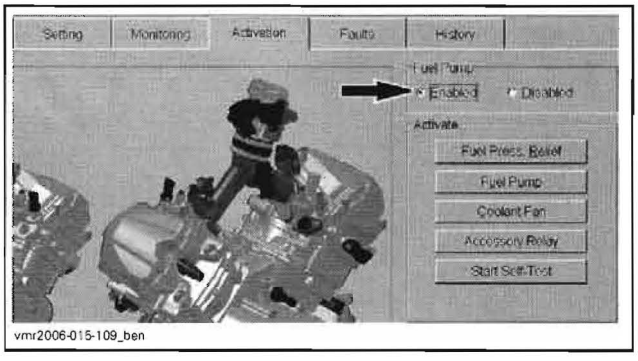

Turn ignition key ON and set engine run/stop switch to RUN and observe fuel pressure. Turn ignition key off then back on. Repeat the test.

FUEL PRESSURE	350 kPa (51 PSI)

A rapid pressure drop indicates leakage either from the fuel rail or from the fuel pump check valve. Check fuel rail for leaks. If it is not leaking then replace fuel pump.

A slow pressure drop indicates leakage either from the fuel injector or from the fuel pressure regulator. Check fuel injector for leaks. If it is not leaking then replace fuel pump.

If there is no leakage, **start engine** and observe fuel pressure. The fuel pressure should be the same as above.

If pressure is within limits, fuel pump and pressure regulator are working adequately.

www.midwestmanuals.com
Sales@midwestmanuals.com

www.midwestmanuals.com

Release fuel pressure in the system using B.U.D.S. Look in the **Activation** tab.

Remove pressure gauge from inlet hose. Reconnect inlet hose.

⚠ WARNING

Wipe off any fuel spillage. Fuel is flammable and explosive under certain conditions. Always work in a well ventilated area.

Reinstall removed parts.

PROCEDURES

FUEL HOSE AND OETIKER CLAMPS

Fuel Hose Replacement

When replacing fuel hoses, be sure to use hoses and clamps as available from BRP parts department. This will ensure continued proper and safe operation.

⚠ WARNING

Use of improper fuel lines could compromise fuel system integrity.

⚠ WARNING

Whenever removing a hose in the fuel system, always use new Oetiker clamps at assembly. Then, validate fuel tightness by performing a fuel pressure test.

Oetiker Clamp Replacement

To secure or cut Oetiker clamps **no. 3** on fuel lines, use pliers (P/N 295 000 070).

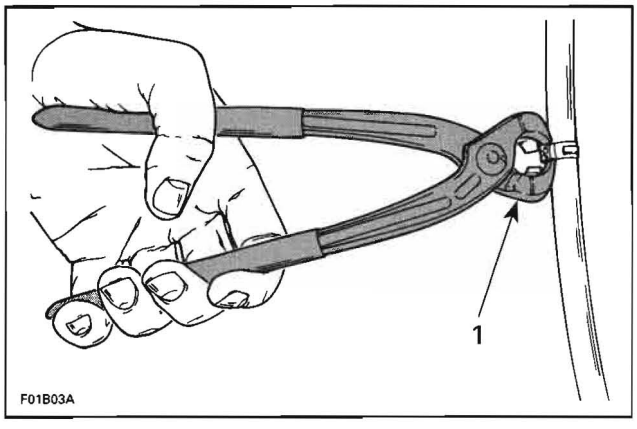

1. Cutting clamp

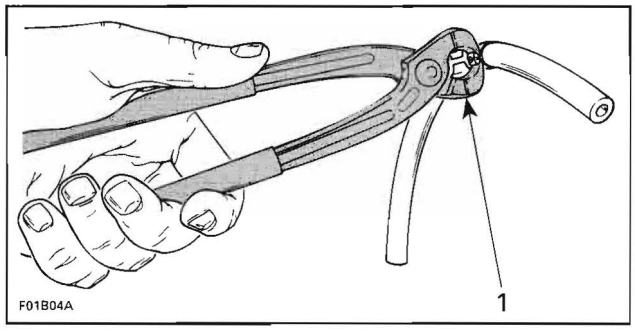

1. Securing clamp

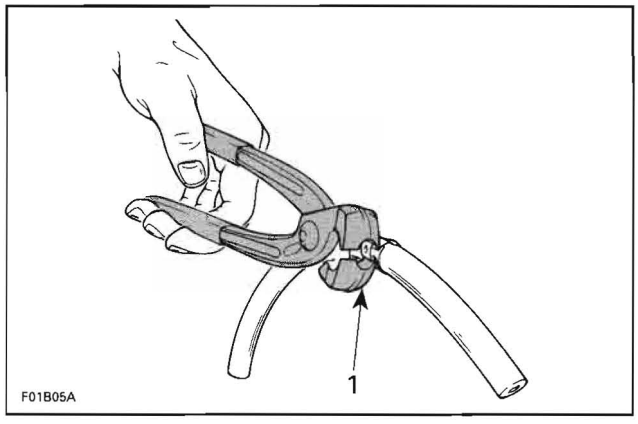

1. Securing clamp in limited access

IN-LINE FUEL FILTER

Replace fuel filter as per maintenance chart schedule. Refer to *MAINTENANCE*.

Filter Removal

Detach filter from body.



Remove Oetiker clamps and pull hoses off.

Filter Inspection

If fuel filter is suspected to be clogged, it may be checked as follows.

www.midwestmanuals.com
Sales@midwestmanuals.com

www.midwestmanuals.com

Using low compressed air, check if fuel filter is clogged. Air should flow easily through filter. In doubt, install a new filter.

Filter Installation

Use arrow on filter to position it according to fuel flow.

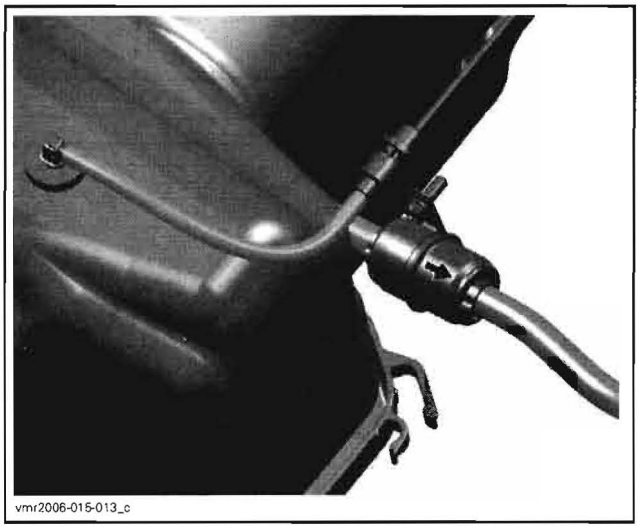
vmr2006-015-013_c

TYPICAL

FUEL TANK

Fuel Tank Draining

⚠ WARNING

Never perform this operation when the engine and/or the exhaust system is/are hot. Never use a hose pincher on injection system high pressure hoses.

Remove fuel tank cap and siphon gas in an approved fuel container.

Fuel Tank Removal

Remove side panels (refer to *BODY*).

Disconnect vent line (OUTLET side) from body.

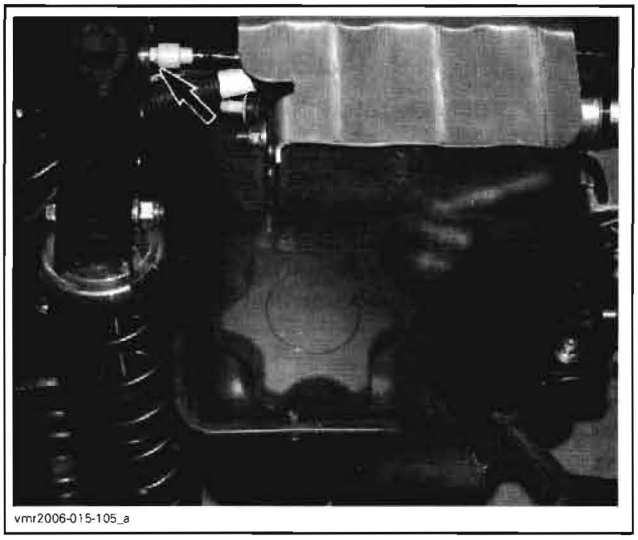
vmr2006-015-105_a

FENDER REMOVED FOR CLARITY

Disconnect fuel line **no. 5** at quick connect. See *FUEL PUMP* below.

Detach in-line fuel filter from body.

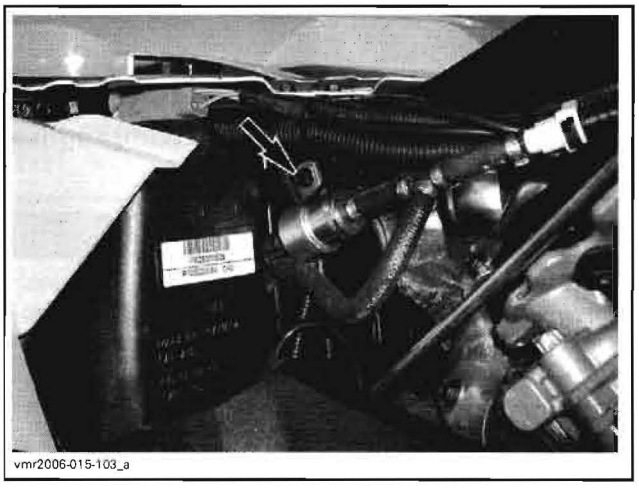
vmr2006-015-103_a

Remove retaining screws **no. 4**.

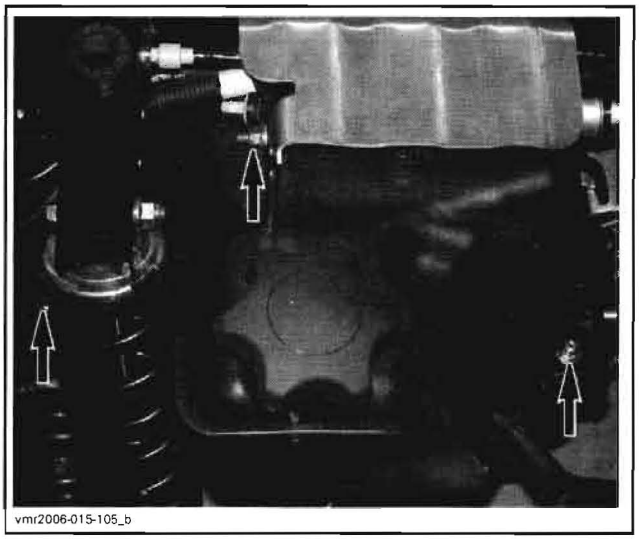
vmr2006-015-105_b

www.midwestmanuals.com
Sales@midwestmanuals.com

www.midwestmanuals.com

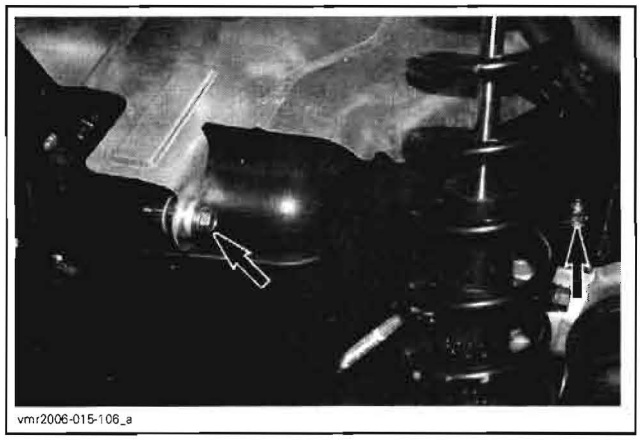
vmr2006-015-106_a

Lift frame just enough to extend RH rear shock absorber. Remove upper screw and move shock absorber away.

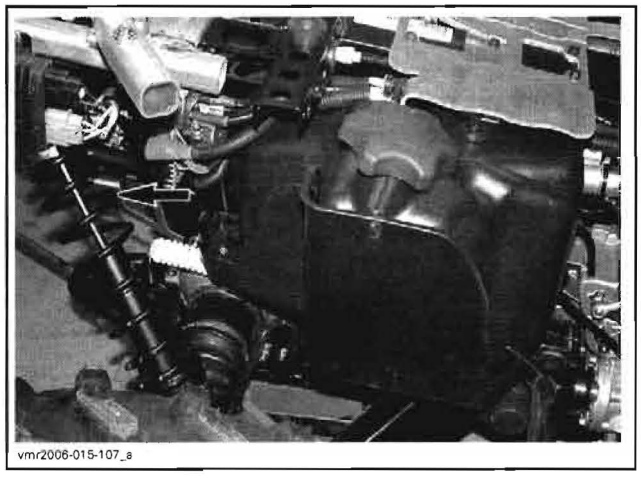
vmr2006-015-107_a

FENDER REMOVED FOR CLARITY

Bend fender then pull out the fuel tank through the RH side of vehicle. Pull enough to reach fuel pump connector and unplug it.


vmr2006-015-108_a

Fuel Tank Protector

To release protector no. 2 from tank:

NOTE: This procedure should be done with parts at room temperature.

– Work on a stable table.
– Lay down front of fuel tank on table.
– Firmly push on top of fuel tank and hold.
– Pull out protector from tank tab.

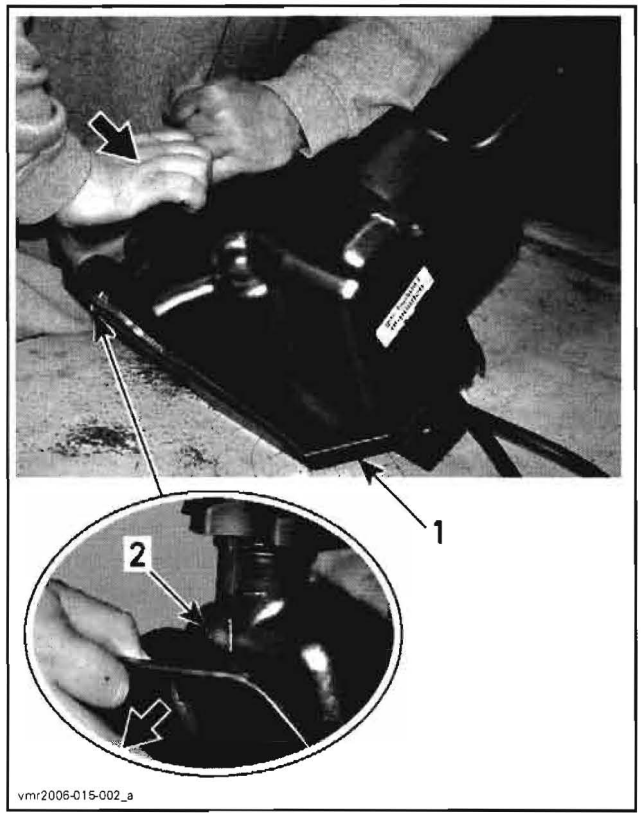

vmr2006-015-002_a

1. *Tank protector*
2. *Tank tab*

– Completely remove protector.

Fuel Tank Inspection

Inspect fuel tank for any damage or cracks which may result in fuel leaks. If so, replace tank with a new one. Inspect tank and protector attachment points for damage. Inspect protector for damage.

Fuel Tank Installation

NOTE: Removing top plate from frame to ease routing hoses and wiring.

Secure tank into protector. Reverse removal procedure.

Reconnect fuel pump connector.

Insert the fuel tank into the frame.

Reconnect hoses.

Tighten retaining screws as per following sequence.

⚠ WARNING

Ensure wiring is on the top of fuel tank.

www.midwestmanuals.com
Sales@midwestmanuals.com

www.midwestmanuals.com

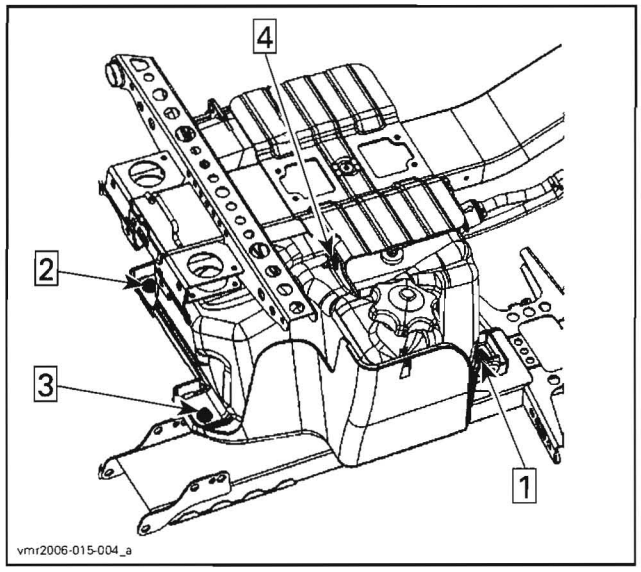

Install gearbox vent tube in its hook on fuel tank protector.

Refuel tank and ensure there are no leaks by performing the *FUEL TANK LEAK TEST* and the *FUEL PRESSURE TEST* as described in this section.

FUEL PUMP

Fuel Pump Circuit Test

Turn ignition key ON and set engine run/stop switch to RUN.

Read voltage as follows.

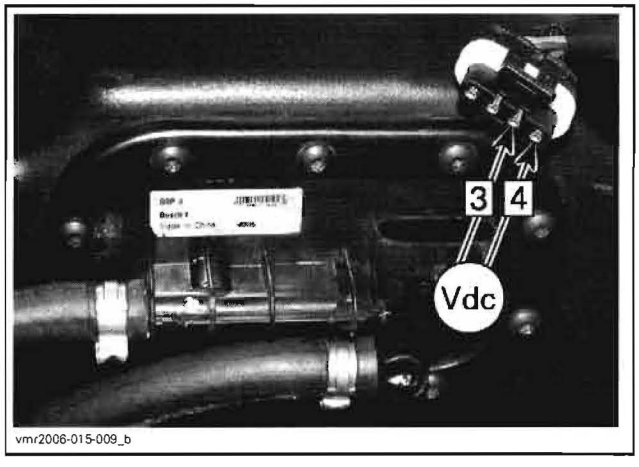

OBSERVATION	SIGNIFICATION
Battery voltage is read for approx 2 seconds then, it will drop to approx. 11 Vdc	– It validates relay R2 supplies power to fuel pump. – It validates the ground circuit through ECM. – When voltage drops to approx 11 Vdc, it validates the ECM works to switch fuel pump on and off.
Battery voltage is not read	– Fuel pump power supply circuit from relay R2 is defective. – Fuel pump ground circuit to ECM is defective. – ECM is faulty.

If battery voltage is not read, check the fuel pump power supply and ground circuits as follows.

Fuel Pump Power Supply

Recheck voltage as follows.

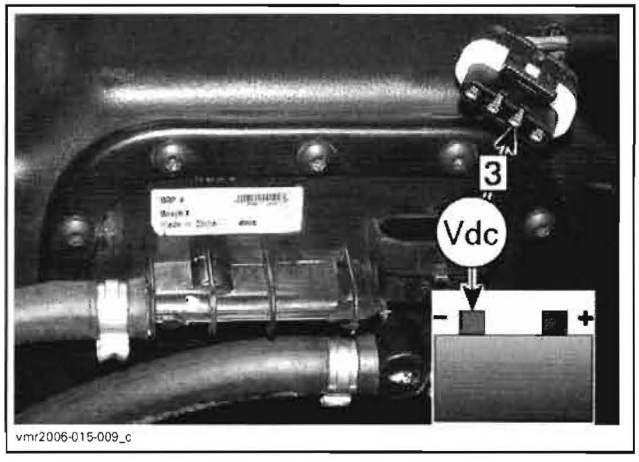

If battery voltage is not read, remove relay R2 and read voltage as follows.

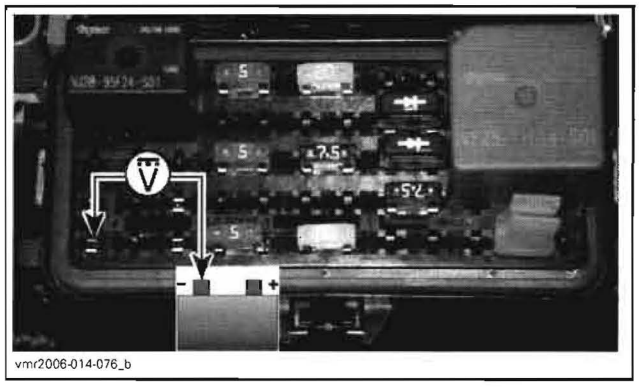

If voltage is now good, check fuse block wiring and wiring/connectors between fuse block and fuel pump.

www.midwestmanuals.com
Sales@midwestmanuals.com

www.midwestmanuals.com

If battery voltage is read, check fuel pump ground circuit to ECM.

Fuel Pump Ground Circuit

Check continuity of fuel pump circuit going to ECM.

ECM CONNECTOR	FUEL PUMP CONNECTOR	MEASUREMENT
PIN		RESISTANCE Ω @ 20°C (68°F)
B-29	4	Close to 0Ω

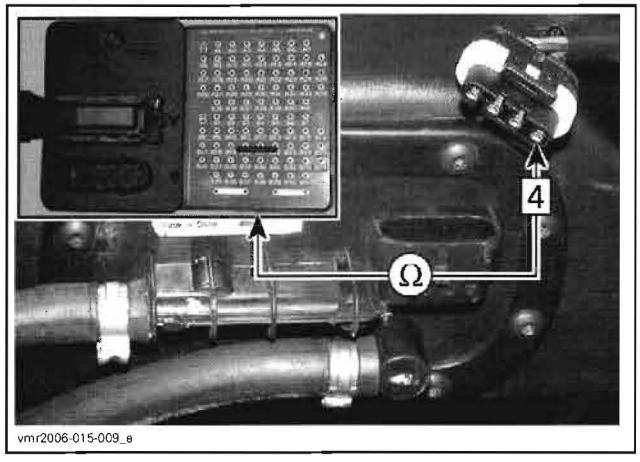

If it is good, check ECM. Refer to *ENGINE MANAGEMENT.*

Fuel Pump Removal

Use B.U.D.S. to release fuel pressure. Look in **Activation** tab.

Remove fuel tank.

Remove fuel pump retaining screws **no. 6**.

Gently push pump up as shown.

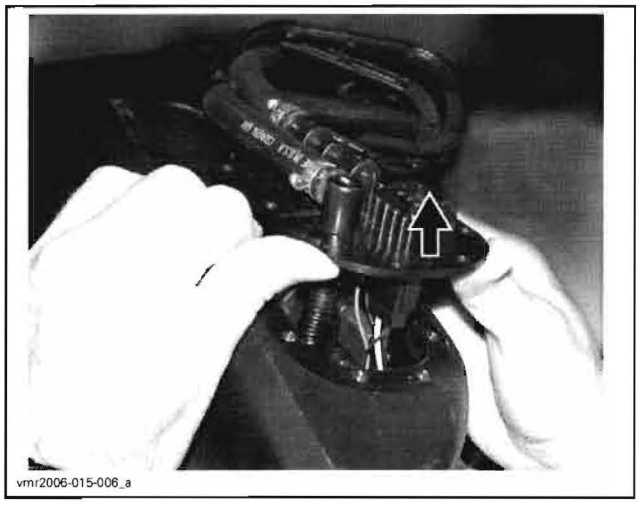

GASKET AND FLANGE NOT SHOWN FOR CLARITY PURPOSES ONLY

CAUTION: While pulling out the fuel pump, pay attention to fuel sensor float arm. Float arm can get stuck and bend which can reduce the fuel sensor capabilities.

Fuel Pump Installation

For installation, reverse the removal process but pay attention to the following.

Install a new gasket.

Pay attention to pump orientation as shown.

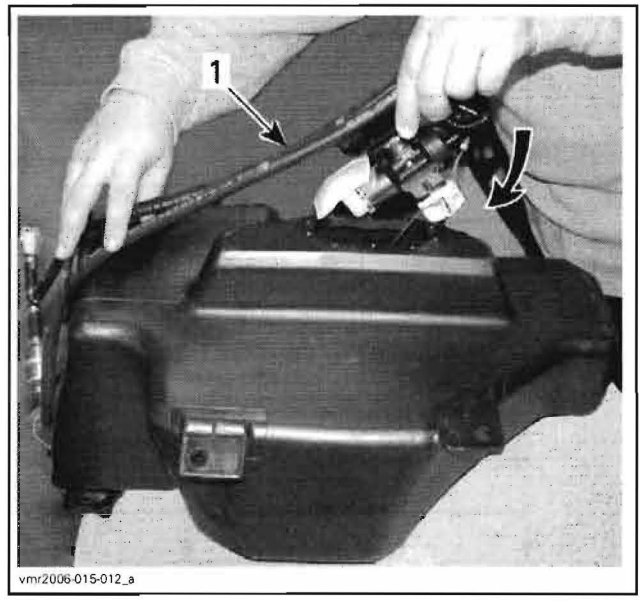

GASKET AND FLANGE NOT SHOWN FOR CLARITY PURPOSES ONLY
1. Fuel line on this side

Tighten retaining screws as per illustrated sequence. For the first sequence from 1 to 10, turn screws only to make a contact between parts, do not tighten yet. For sequence 11 to 19, properly torque to 2 N•m (18 lbf•**in**).

Install hoses properly on IN and OUT nipples.

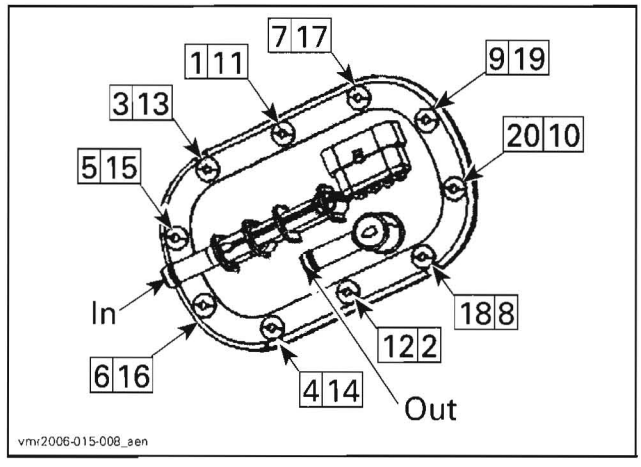

www.midwestmanuals.com
Sales@midwestmanuals.com

www.midwestmanuals.com

FUEL SYSTEM DIAGNOSTIC FLOW CHART

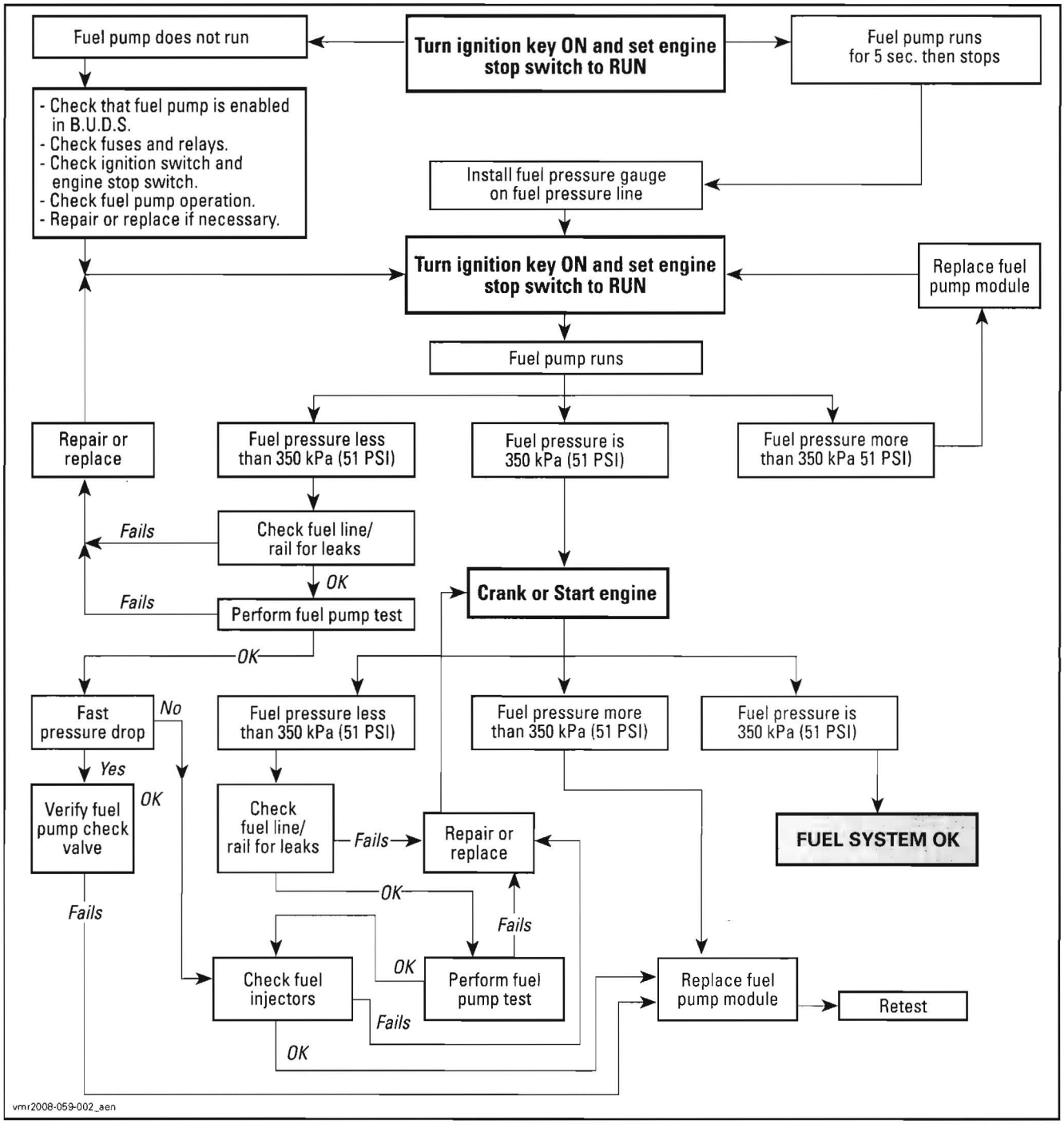

www.midwestmanuals.com
Sales@midwestmanuals.com

www.midwestmanuals.com

COMMUNICATION TOOLS AND B.U.D.S. SOFTWARE

SERVICE TOOLS

Description	Part Number	Page
Optional extension cable	529 035 697	232
Optional extension cable	529 035 703	231
Communication kit	529 035 981	231
MPI-2	529 036 018	232
Diagnostic cable	710 000 851	232

COMMUNICATION TOOLS

Two different MPI (Multi-Purpose Interface) can be used with B.U.D.S. software: MPI and MPI-2.

MULTI-PURPOSE INTERFACE (MPI)

PART REQUIRED
PC computer
B.U.D.S. software Use latest version available on BOSSWeb
Communication kit (P/N 529 035 981) 
Optional extension cable (P/N 529 035 703) 

MPI Supply

The MPI can use the vehicle power for its supply. Four AA batteries or an AC/DC power supply can also be used. Make sure to respect MPI specification if a power supply is used.

Connections with Vehicle

⚠ WARNING

If the computer you are using is connected to the power outlet, there is a potential risk of electrocution when working in contact with water. Be careful not to touch water while working with the computer.

Remove service compartment cover and locate communication connector.

Unplug communication connector.

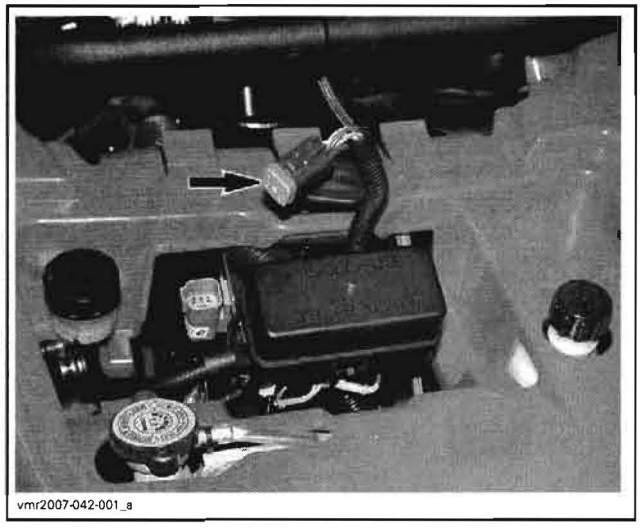
vmr2007-042-001_a

Connect the 6-pin adapter to the vehicle connector.

www.midwestmanuals.com
Sales@midwestmanuals.com

www.midwestmanuals.com

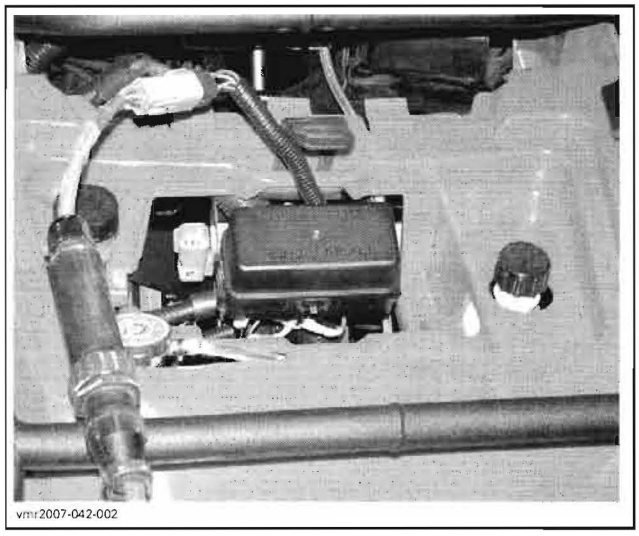
vmr2007-042-002

Connect the diagnostic cable to the 6-pin adapter.

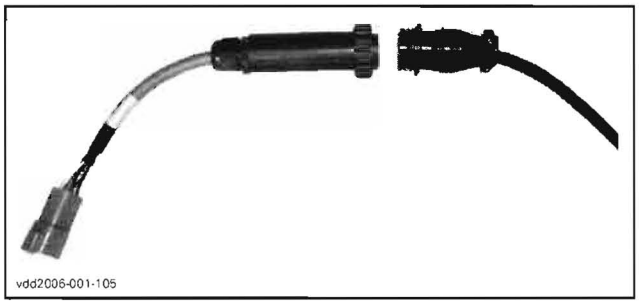
vdd2006-001-105

Connect the other diagnostic cable connector to MPI connector.

Connect serial cable to MPI connector.



vdd2006-001-102

Connect remaining serial cable connector to the serial port of a PC (personal computer).

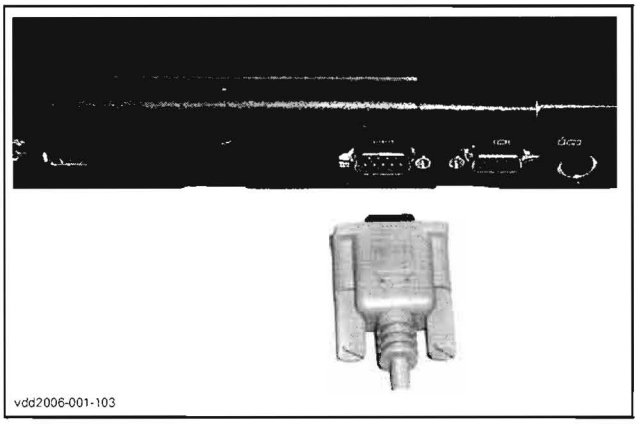
vdd2006-001-103

Use B.U.D.S. software as described further in *B.U.D.S. SOFTWARE*.

MULTI-PURPOSE INTERFACE-2 (MPI-2)

PART REQUIRED
PC computer
B.U.D.S. software Use latest version available on BOSSWeb
MPI-2 (P/N 529 036 018) 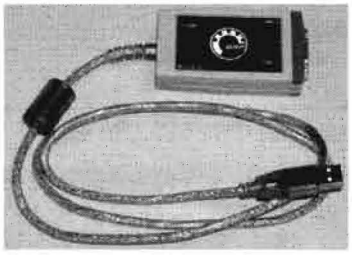
Optional extension cable (P/N 529 035 697) 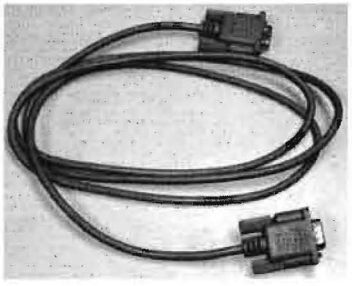
Diagnostic cable (P/N 710 000 851) 

www.midwestmanuals.com
Sales@midwestmanuals.com

www.midwestmanuals.com

MPI-2 Supply

The MPI-2 uses the USB power of the PC computer for its supply.

Connections with Vehicle

⚠ WARNING

If the computer you are using is connected to the power outlet, there is a potential risk of electrocution when working in contact with water. Be careful not to touch water while working with the computer.

Remove service compartment cover and locate communication connector.

Unplug communication connector.


vmr2007-042-001_a

Connect diagnostic cable to vehicle connector.

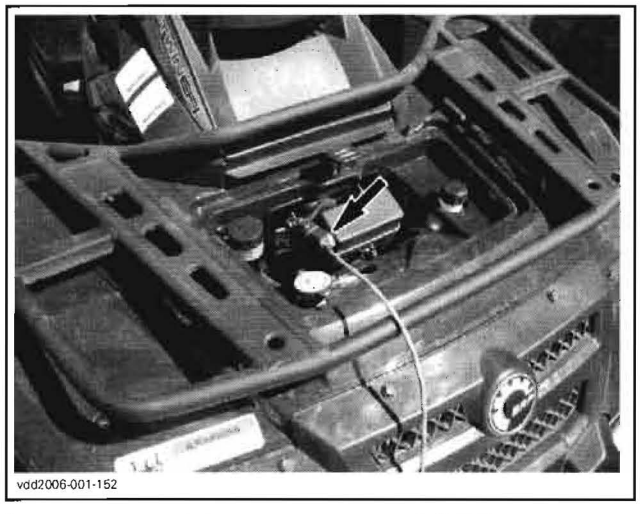
vdd2006-001-152

Connect remaining connector to MPI-2 connector.

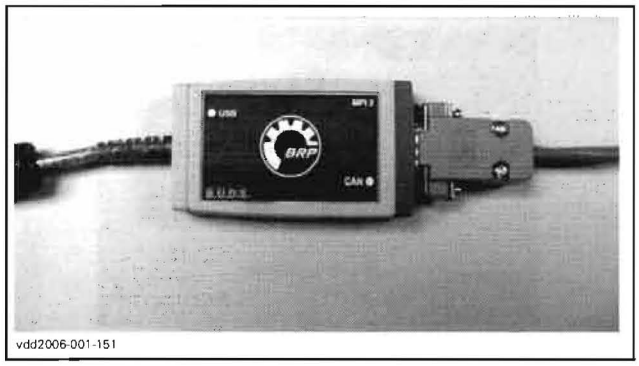
vdd2006-001-151

Connect remaining MPI-2 connector to the USB port of a PC (personnal computer).

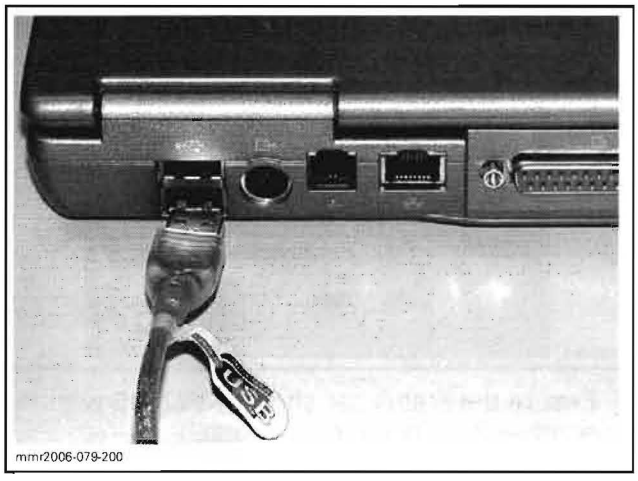
mmr2006-079-200

Use B.U.D.S. software as described further in *B.U.D.S. SOFTWARE*.

B.U.D.S. SOFTWARE

B.U.D.S. (Bombardier Utility and Diagnostic Software) is designed to program key(s), to allow electrical component inspection, diagnostic options and adjustments such as the closed throttle.

For more information pertaining to the use of the B.U.D.S. software, use its help which contains detailed information on its functions.

Ensure to use the latest B.U.D.S. version available on BOSSWeb.

When using the B.U.D.S. software:

- Turn ignition switch ON and set engine run/stop switch to RUN to activate the communication.
- Ensure that 115200 speed is properly selected in "**MPI**" under "**Choose speed**".

www.midwestmanuals.com
Sales@midwestmanuals.com

www.midwestmanuals.com

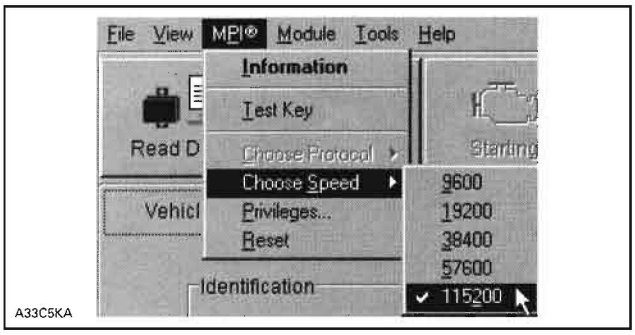

NOTE: If you are using an old PC computer, it may be necessary to use a slower speed so that the communication works.

- Ensure that the protocol "Kw2000" is properly selected in "MPI" under "**Choose protocol**.

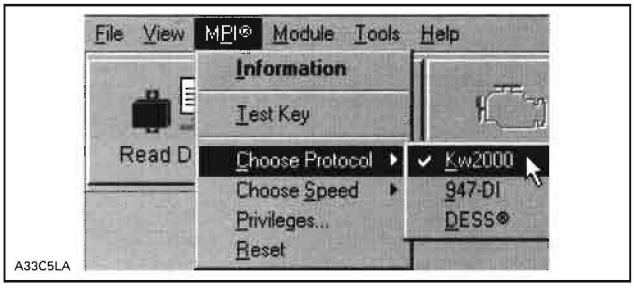

- Ensure the status bar shows KW2000 with the number 2 to its right.

NOTE: Number 2 means that 2 "ECU" are connected (ECM and multifunction gauge).

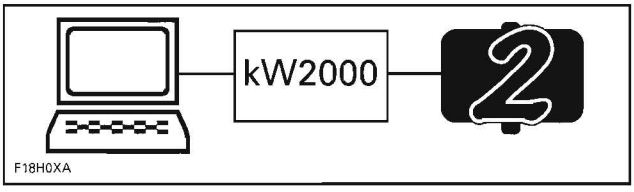

CONNECTION SUCCESSFUL — ECM AND MULTIFUNCTION GAUGE ARE CONNECTED

If an "X" is shown, this means that no communication between MPI and ECM/multifunction gauge takes place. Possible causes are:

- ECM is not powered-up
- multifunction gauge is not powered-up
- wrong protocol is used
- bad connection between MPI and module.

Changes in ECM

Anytime a change is brought in ECM through B.U.D.S., there will be an "EMS Tracking" message that will say "Remove key from vehicle". When this occurs, remove the key from ignition switch and wait until the message disappears (it lasts approximately 15 seconds after key removal).

www.midwestmanuals.com
Sales@midwestmanuals.com

www.midwestmanuals.com

IGNITION SYSTEM

SERVICE TOOLS

Description	Part Number	Page
ECM adapter	420 277 010	235
Fluke 111 multimeter	529 035 868	235

GENERAL

NOTE: It is a good practice to check for fault codes using B.U.D.S. software as a first troubleshooting step. Refer to *EMS DIAGNOSTIC* sub section.

The EMS controls the ignition system. For more information, refer to *ENGINE MANAGEMENT* section.

The battery supplies the primary side of ignition coil through a relay while the ECM completes the circuit for each cylinder by switching it to the ground at the right moment. The ECM can detect open and short circuit in the primary winding but it does not check the secondary winding.

⚠ WARNING

Never check for engine ignition spark from an open coil and/or spark plug as spark may cause potential fuel vapor to ignite.

Ignition Timing

Ignition timing is not adjustable.

Tools

For best electrical measurement results, use the Fluke 111 multimeter (P/N 529 035 868).



529 035 868

NOTE: To probe the ECM connector terminals, use the ECM adapter (P/N 420 277 010) to prevent damaging terminals. Refer to *ENGINE MANAGEMENT* for more information.

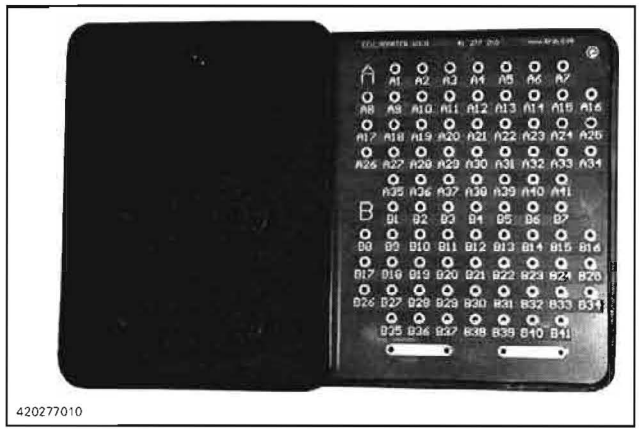

420277010

PROCEDURES

IGNITION SWITCH

Quick Test

Set engine run/stop switch (located on multifunction switch housing) in the RUN position.

Turn ignition switch to ON position.

If multifunction speedometer turns on (assuming it works), the ignition switch and engine run/stop switch are good.

If multifunction speedometer does not turn on, check the following in this order:

- ECM is properly powered (refer to *ENGINE MANAGEMENT*)
- ignition switch
- engine run/stop switch.

Switch Resistance Test

Remove center panel and dashboard. Refer to *BODY*.

Unplug ignition switch connector.

www.midwestmanuals.com
Sales@midwestmanuals.com

www.midwestmanuals.com

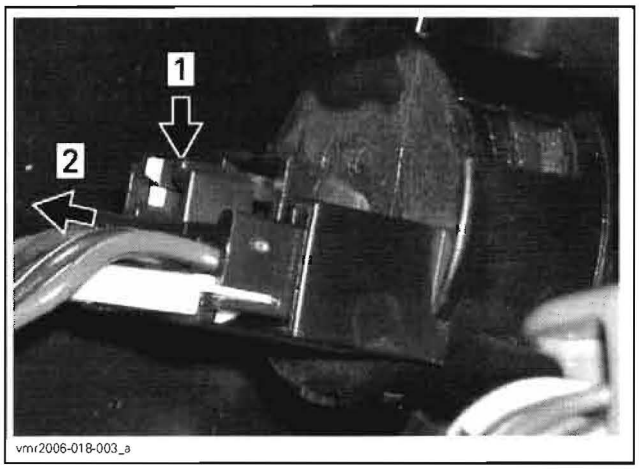

Using a multimeter, test switch as follows.

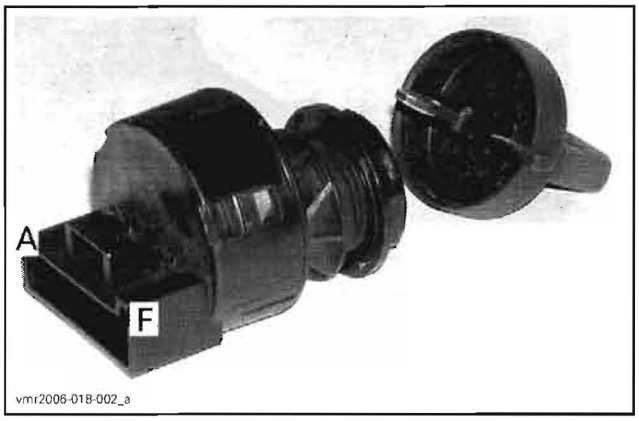

PINOUT

IGNITION SWITCH	PIN		RESISTANCE @ 20°C (68°F)
OFF	B	E	Infinite (0L)
ON with lights			1 Ω max.
ON without lights			

If switch is out of specification, replace with a new one.

If switch tests good, continue testing.

Switch Wiring Test (Ignition Function)

Wiring Test between Ignition Switch and Battery Ground

IGNITION SWITCH CONNECTOR		RESISTANCE @ 20°C (68°F)
Pin "B"	Battery ground	Close to 0 Ω

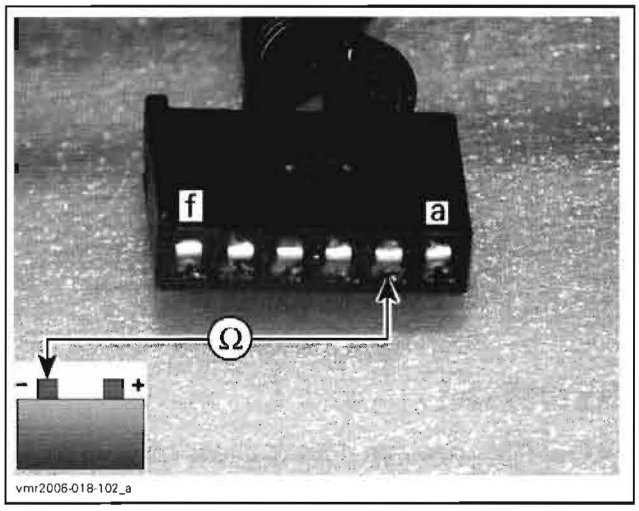

If out of specification, repair wiring/connector.

If as per specification, continue testing.

Wiring Test Between Ignition Switch and Multifunction Switch

IGNITION SWITCH CONNECTOR	MULTIFUNCTION SWITCH CONNECTOR (MG1)	RESISTANCE @ 20°C (68°F)
Pin E	Pin 2	Close to 0 Ω

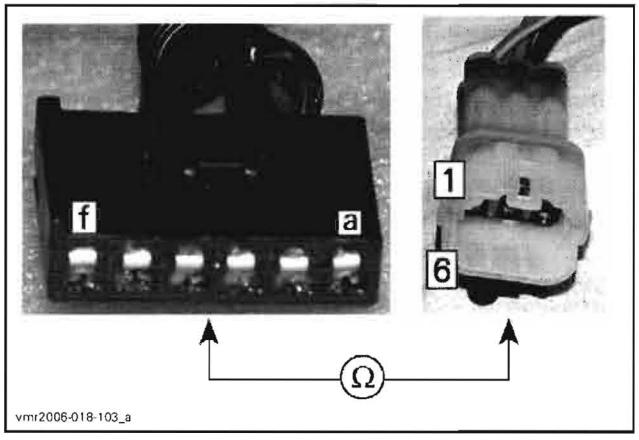

If out of specification, repair wiring/connector.

Switch Wiring Test (DESS Function)

Wiring Test Between Ignition Switch and ECM

Unplug ignition switch connector and disconnect connector B from ECM.

Check continuity of wiring between ignition switch and ECM as follows.

www.midwestmanuals.com
Sales@midwestmanuals.com

www.midwestmanuals.com

IGNITION SWITCH CONNECTOR	ECM CONNECTOR	RESISTANCE @ 20°C (68°F)
C	B-39	Close to 0 Ω
D	B-38	

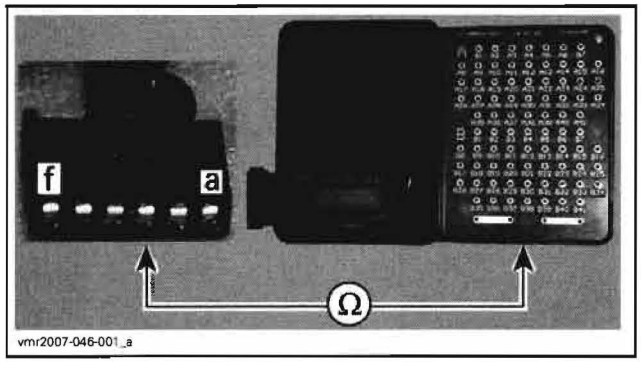

vmr2007-046-001_a

If any test fails, repair wiring/connector.

ENGINE RUN/STOP SWITCH

NOTE: The engine run/stop switch is located on multifunction switch housing.

Quick Test

Refer to *IGNITION SWITCH* above.

Switch Resistance Test (Ignition Function)

Using a multimeter, test switch as follows.

POSITION	MULTIFUNCTION SWITCH CONNECTOR (MG1) (run/stop)		RESISTANCE @ 20°C (68°F)
RUN	1	2	1 Ω MAX.
STOP			Infinite (0L)

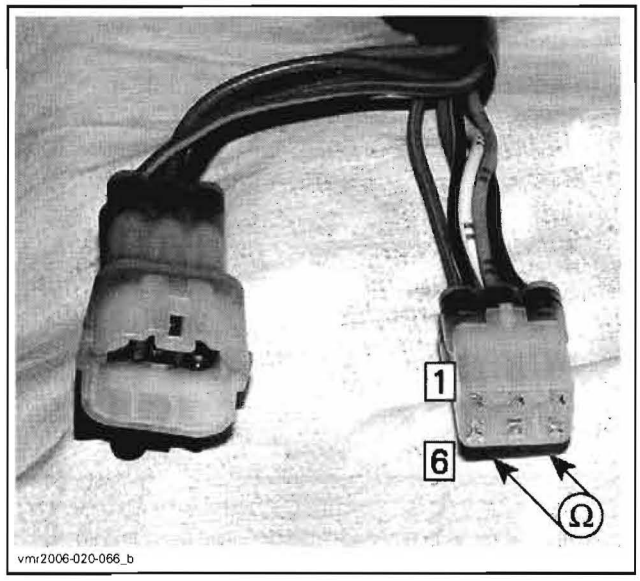

vmr2006-020-066_b

If switch is out of specification, replace with a new one.

Switch Wiring Test (Ignition Function)

Wiring Test Between Multifunction Switch and ECM

ECM CONNECTOR	MULTIFUNCTION SWITCH CONNECTOR	RESISTANCE @ 20°C (68°F)
B-26	Pin 1	Close to 0 Ω

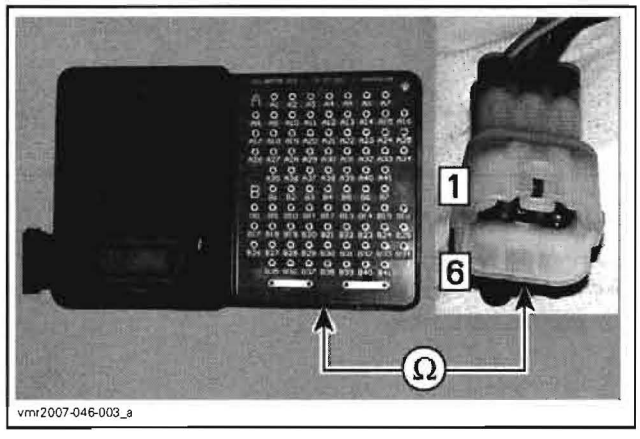

vmr2007-046-003_a

Switch Resistance Test (DESS Function)

Check multifunction switch as follows.

MULTIFUNCTION SWITCH	ECM CONNECTOR		RESISTANCE @ 20°C (68°F)
STOP	B-38	B-39	Close to 0 Ω
RUN			Infinite (0L)

www.midwestmanuals.com
Sales@midwestmanuals.com

www.midwestmanuals.com

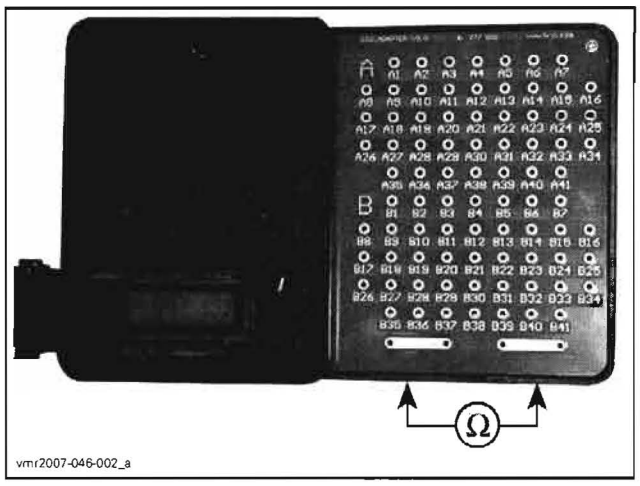

If any test fails, check continuity of wiring/connectors. If they test good, replace switch.

IGNITION COIL

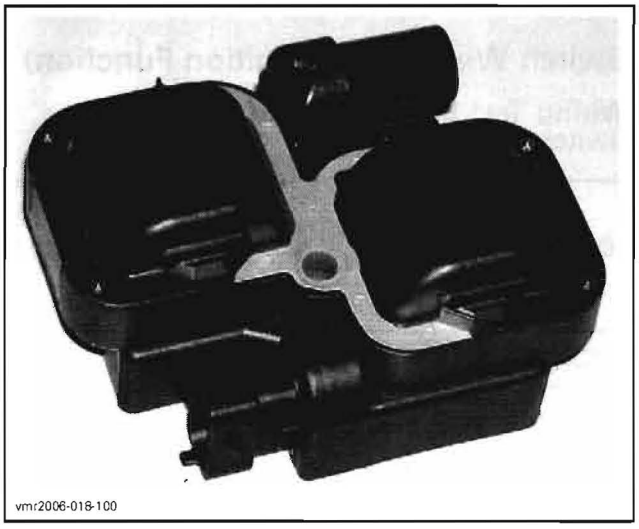

Quick Test with B.U.D.S.

Using the vehicle communication kit (VCK) with the B.U.D.S. software, energize the ignition coil for each spark plug.

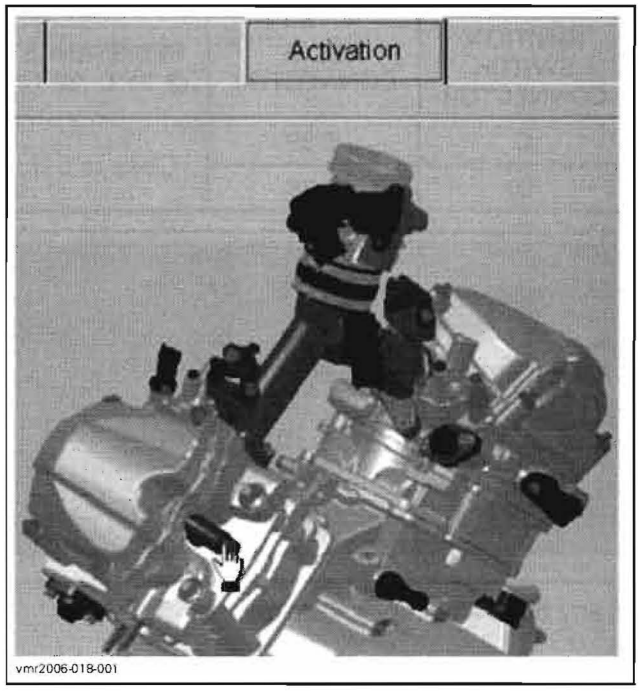

You should hear the spark occurring. In doubt, use an inductive spark tester. If there is no spark, perform the following checks.

NOTE: Keep in mind that even if there is a spark during this static test, voltage requirement is higher to produce a spark in the combustion chamber when engine is running. Ignition coil could be not working in real operation. Replacing ignition coil may be necessary as a test.

NOTE: Ensure spark plug cable is on the appropriate cylinder.

Ignition Coil Input Voltage

Ensure ignition coil is properly powered as follows.

Remove RH inner fender. Refer to *BODY*.

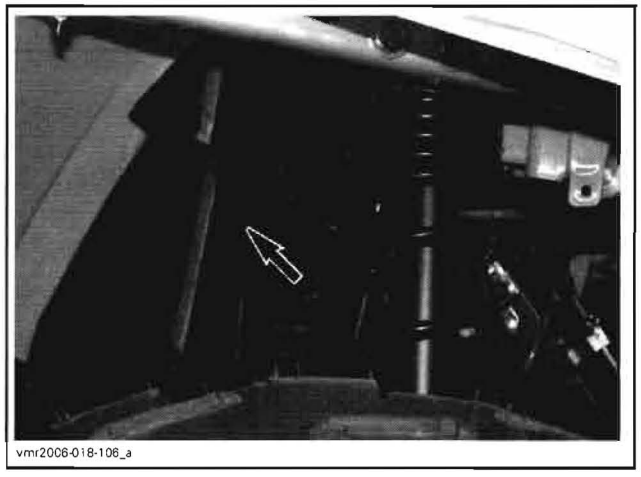

Disconnect the 3-pin connector from the ignition coil and check the voltage supplied by the main relay.

www.midwestmanuals.com
Sales@midwestmanuals.com

www.midwestmanuals.com

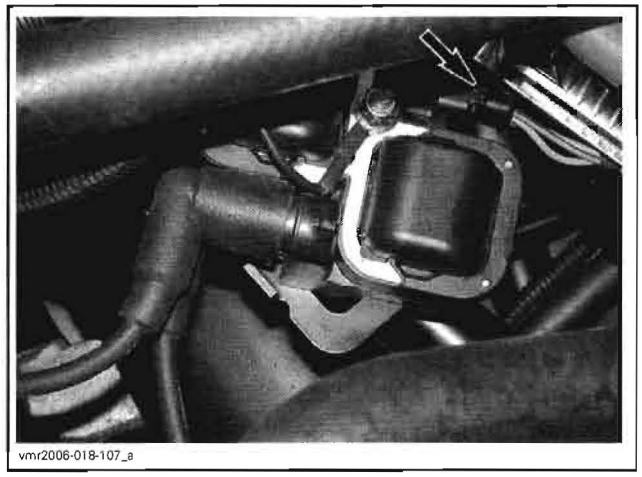
vmr2006-018-107_a

Turn ignition switch to ON and set engine run/stop switch to RUN.

Using a multimeter, read voltage.

IGNITION COIL CONNECTOR	VOLTAGE
Pin 2 with battery ground	12 V

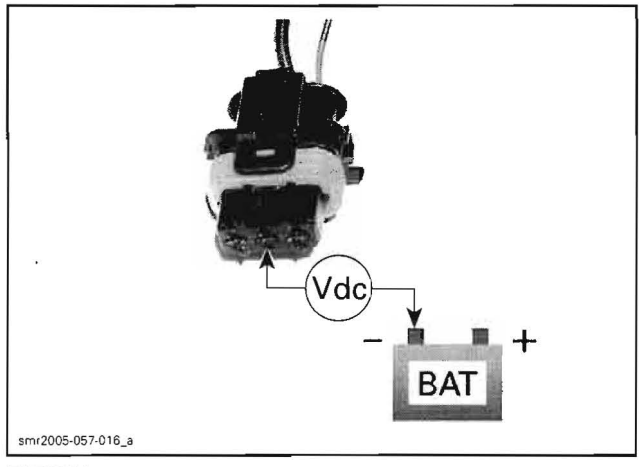

smr2005-057-016_a

TYPICAL

The voltage should be 12 V.

If 12 V is NOT read, check continuity of ignition coil supply circuit.

If 12 V is read, disconnect the ECM connector "A" and check the continuity of appropriate circuit.

COMPONENT	CIRCUIT NUMBER (ignition coil connector)	CIRCUIT NUMBER (ECM connector)
Cylinder 1 (front)	1	A-1
Cylinder 2 (rear)	3	A-41

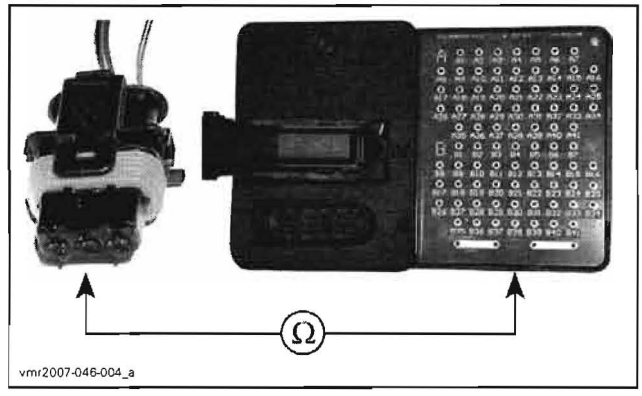

vmr2007-046-004_a

If wiring harness is defective, repair the connector or replace the wiring harness between ECM connector and the ignition coil.

If wiring harness is good, refer to ECM in *ENGINE MANAGEMENT*.

Ignition Coil Resistance Test

An ignition coil with good resistance measurement can still be faulty. Voltage leak can occur at high voltage level which is not detectable with an ohmmeter. Replacing the ignition coil may be necessary as a test.

Disconnect ignition cable from spark plug.

Primary Windings

Reconnect connector to ignition coil.

Remove center panel and dashboard. Refer to *BODY*.

Disconnect engine connector.

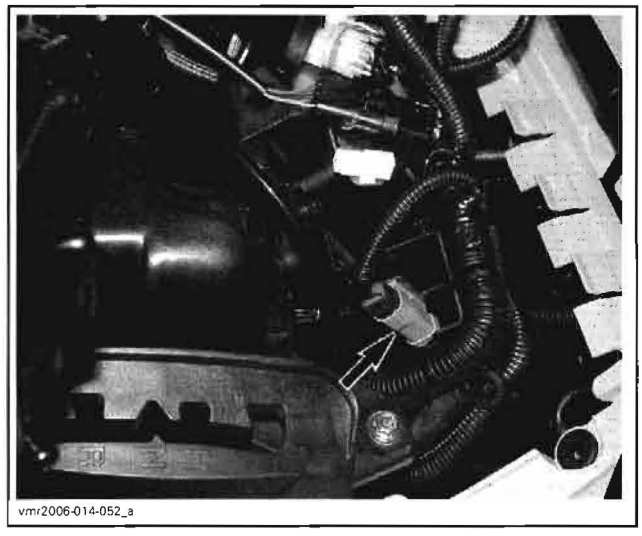
vmr2006-014-052_a

Disconnect "A" connector from ECM.

Using a multimeter, check resistance in primary windings as follows.

www.midwestmanuals.com
Sales@midwestmanuals.com

www.midwestmanuals.com

PRIMARY CIRCUIT	ENGINE CONNECTOR	ECM CONNECTOR "A"	RESISTANCE @ 20°C (68°F)
Front	Pin 2	A-1	.3 - .6 Ω
Rear		A-41	

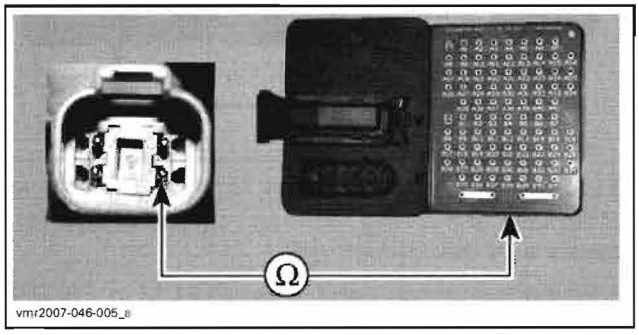

If any resistance is not good, replace ignition coil.

If the windings test good, check wiring/connectors and if adequate, try a new ECM.

Secondary Windings

Due to the integrated diode, it is not possible to take any resistance measurement of the secondary winding.

SPARK PLUG

Spark Plug Removal

Unplug the spark plug cable.

Clean the spark plug area with pressurized air.

Unscrew spark plug.

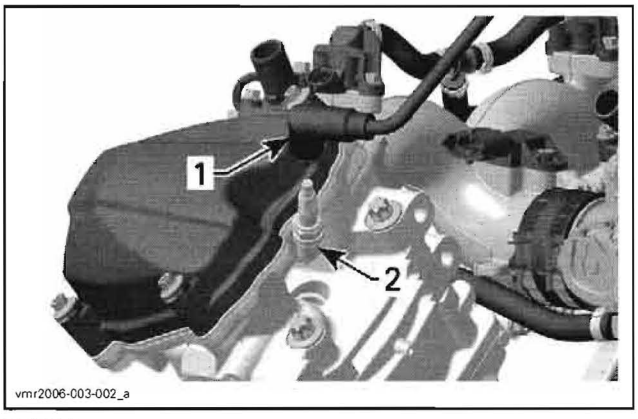

TYPICAL
1. *Spark plug cable*
2. *Spark plug*

Troubleshooting Fouled Spark Plug

Fouling of the spark plug is indicated by irregular running of the engine, decreased engine speed due to misfiring, reduced performance, and increased fuel consumption. This is due to a loss of compression. Other possible causes are: prolonged idling or low-speed riding, a clogged air filter, incorrect fuel, defective ignition system, incorrect spark plug gap, lubricating oil entering the combustion chamber, or too cold spark plug. The plug face of a fouled spark plug has either a wet black deposit or a black carbon fouling. Such coatings form a conductive connection between the center electrode and ground.

Spark Plug Analysis

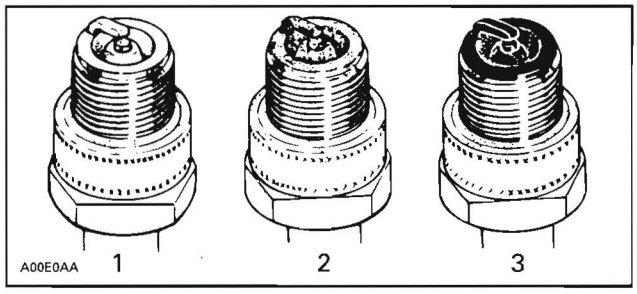

TYPICAL
1. *Overheated (light grey, white)*
2. *Normal (light brown, brown)*
3. *Fouled (black, wet or dry, dark deposits, grey, melted coating)*

The plug face reveals the condition of the engine, operating condition, method of driving and fuel mixture. For this reason it is advisable to inspect the spark plug at regular intervals, examining the plug face (i.e. the part of the plug projecting into the combustion chamber).

Spark Plug Installation

Prior to installation make sure that contact surfaces of the cylinder head and spark plug are free of grime.

- Using a wire feeler gauge, set electrode gap as specified in *TECHNICAL SPECIFICATIONS*.
- Apply antiseize lubricant over the spark plug threads to prevent possible seizure.
- Hand screw spark plug into cylinder head and tighten with a torque wrench and a proper socket.

www.midwestmanuals.com
Sales@midwestmanuals.com

www.midwestmanuals.com

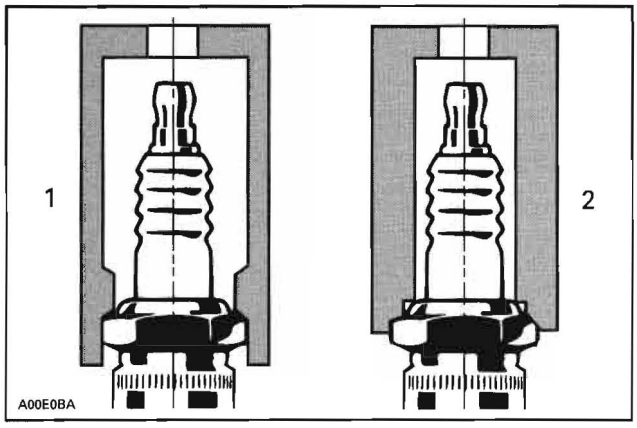

1. Proper socket
2. Improper socket

– Torque spark plug to 20 N•m (15 lbf•ft).

www.midwestmanuals.com
Sales@midwestmanuals.com



sales@midwestmanuals.com
www.midwestmanuals.com

www.midwestmanuals.com

CHARGING SYSTEM

SERVICE TOOLS

Description	Part Number	Page
Fluke 111 multimeter	529 035 868	244
4-pin magneto harness adapter	529 036 021	246–247

SERVICE TOOLS – OTHER SUPPLIER

Description	Part Number	Page
Snap-on inductive ammeter	MT110	244

SERVICE PRODUCTS

Description	Part Number	Page
dielectric grease	293 550 004	250

GENERAL

The purpose of the charging system is to keep the battery at a full state of charge.

NOTE: For an overview of the vehicle electrical system, refer to *ENGINE MANAGEMENT*.

Magneto

The magneto is the primary source of electrical energy. It transforms magnetic field into electric current (AC).

The magneto has a 3 phase series stator.

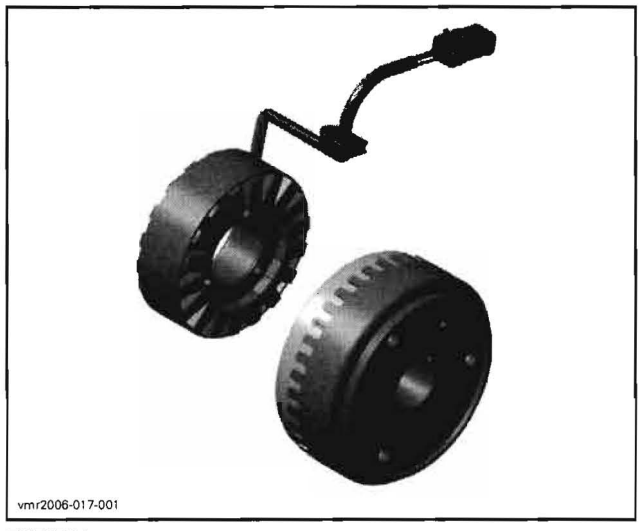

TYPICAL

Voltage Regulator/Rectifier

The rectifier receives AC current from the magneto and transforms it into direct current (DC).

The voltage regulator, included in the same unit, limits voltage as follows to prevent any damage to electrical components.

MODEL	VOLTAGE Vdc
All	14.8

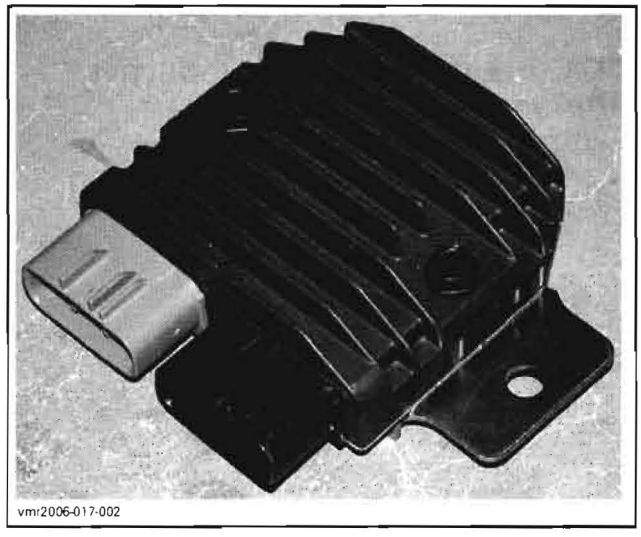

www.midwestmanuals.com
Sales@midwestmanuals.com

www.midwestmanuals.com

NOTE: If the battery will not stay charged, the problem can be any of the charging system components. If these all check good, try a new voltage regulator/rectifier.

Battery

The battery is the DC source for the electric starter, the ECM and all accessories.

PROCEDURES

NOTE: First, ensure that battery is in good condition prior to performing the following test.

For best results, use the Fluke 111 multimeter (P/N 529 035 868).



529 035 868

If the battery is regularly discharged, check battery and solenoid terminals.

VOLTAGE REGULATOR/RECTIFIER

Static Test: Continuity

Due to internal circuitry, there is no static test available.

DC Current Test with an Inductive Ammeter

Pull out cover.

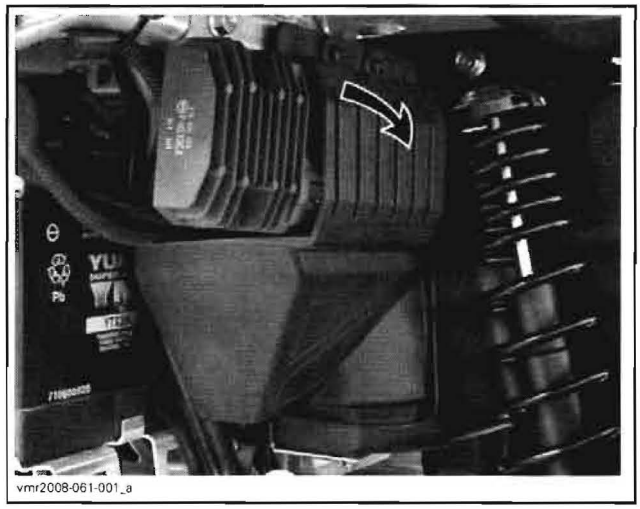

Use a Snap-on inductive ammeter (P/N MT110) or equivalent and place it over the RED wire going out of voltage regulator/rectifier.

- Start engine.
- Read current.

TEST ENGINE SPEED	CURRENT
4000 RPM	Approx. 3 - 7 A

- If current is below specification, check magneto (stator) output prior to concluding that rectifier is faulty.

DC Current Test with a Multimeter

⚠ WARNING

Pay attention not to touch chassis with any tool when disconnecting/connecting wires. Pay attention so that battery positive post does not touch chassis when moving battery.

- Disconnect battery cable and voltage regulator/rectifier wire from solenoid post.

www.midwestmanuals.com
Sales@midwestmanuals.com

www.midwestmanuals.com

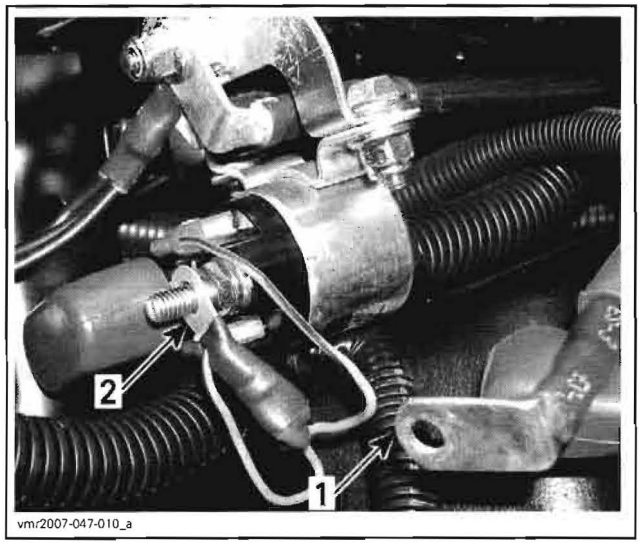

1. Move battery cable away to remove wire underneath
2. Remove this wire

– Reconnect battery cable.

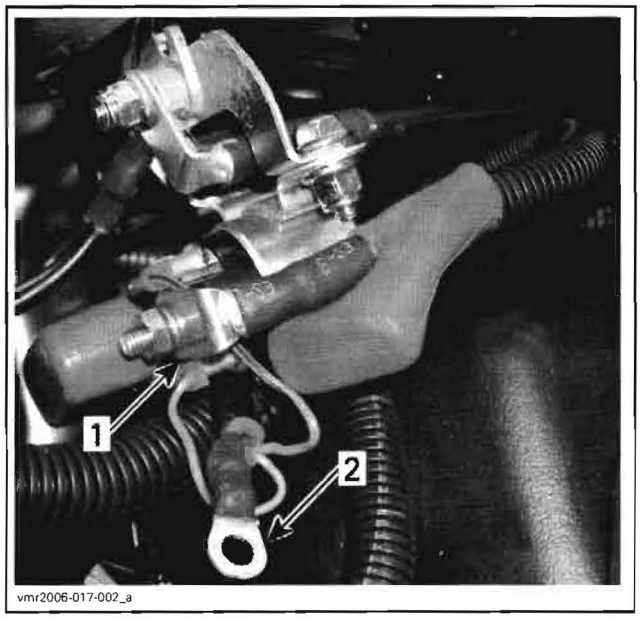

1. Battery cable installed
2. Voltage regulator/rectifier wire disconnected

– Set multimeter to Adc.
– Start engine.
– Connect multimeter probes between voltage regulator/rectifier wire and solenoid post.
– Read current.

TEST ENGINE SPEED	CURRENT
4000 RPM	Approx. 3 - 7 A

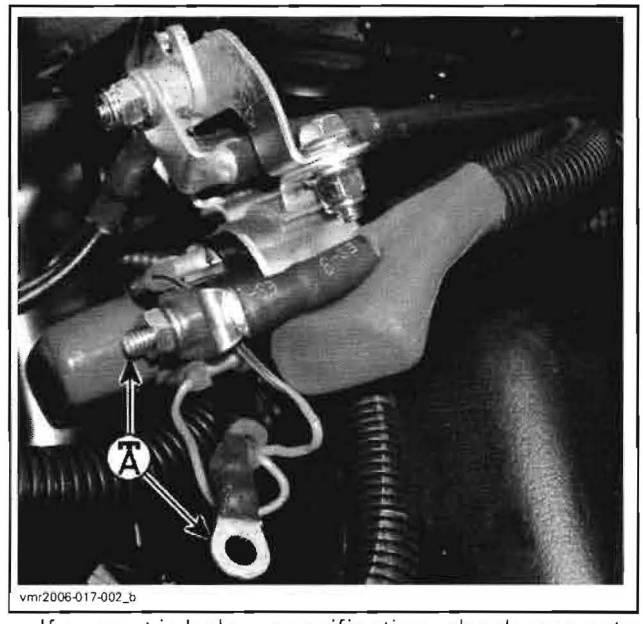

– If current is below specification, check magneto (stator) output prior to concluding that rectifier is faulty.
– Properly reconnect voltage regulator/rectifier wire.

Voltage Test

Proceed as follows:

– Release battery strap. Pull back battery to reach battery posts.
– Start engine.
– Connect a multimeter to battery posts. Set multimeter to Vdc scale.
– Start engine.
– Read voltage.

TEST ENGINE SPEED	VOLTAGE
4000 RPM	14.4 - 15.2 Vdc

www.midwestmanuals.com
Sales@midwestmanuals.com

www.midwestmanuals.com



If voltage is above specification, replace voltage regulator/rectifier.

NOTE: If voltage exceeds 19 Vdc, gauge will display OVER VOLTAGE. In this case, replace voltage regulator/rectifier by a new one.

If voltage is below specification, check stator, wiring and connections.

Properly secure battery.

Reinstall cover.

STATOR

Remove seat and RH side panel.

Remove protective plate as necessary.

Static Test: Continuity

– Disconnect the magneto wiring harness connector.

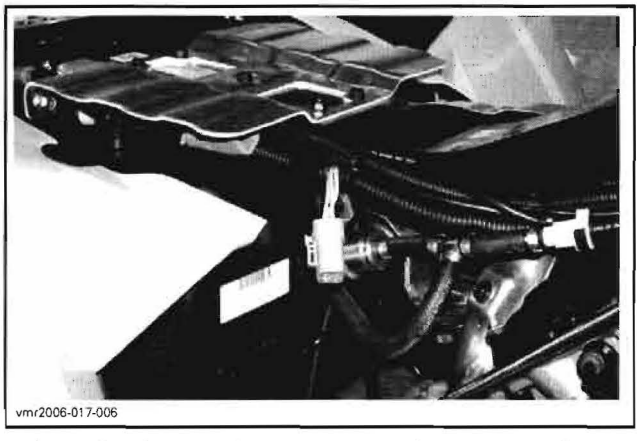

– Install the 4-pin magneto harness adapter (P/N 529 036 021) on magneto connector. Leave the other connector unplugged.

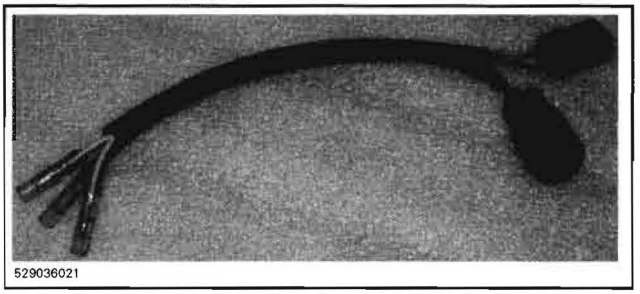

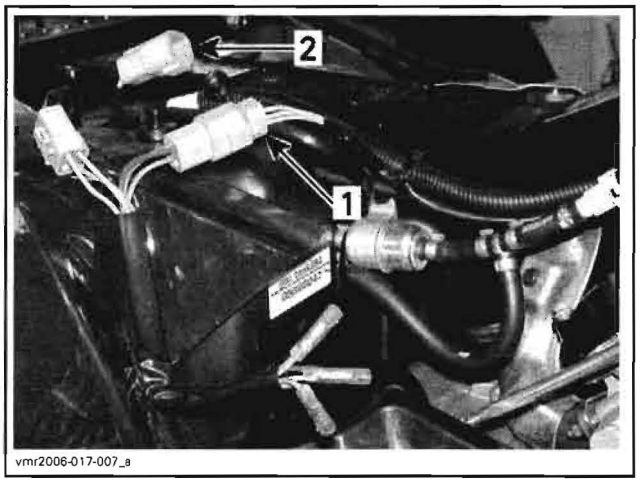

1. Magneto connector
2. Leave this tool connector unplugged

– Set multimeter to Ω.
– Connect multimeter between YELLOW wires.
– Read resistance.

TERMINAL	RESISTANCE @ 20°C (69°F)
1 and 2	0.1 - 1 Ω
1 and 3	
2 and 3	

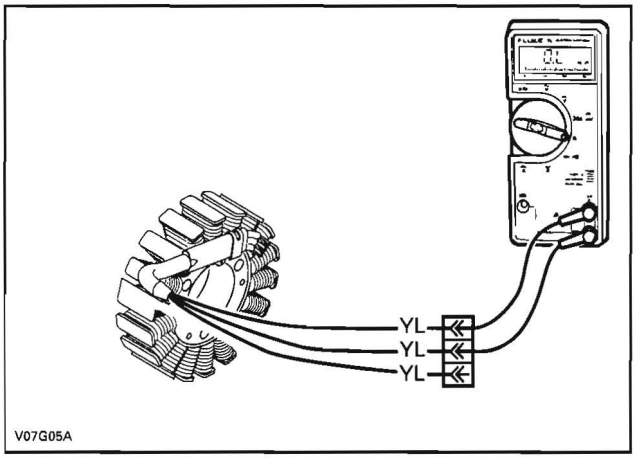

TYPICAL

www.midwestmanuals.com
Sales@midwestmanuals.com

www.midwestmanuals.com

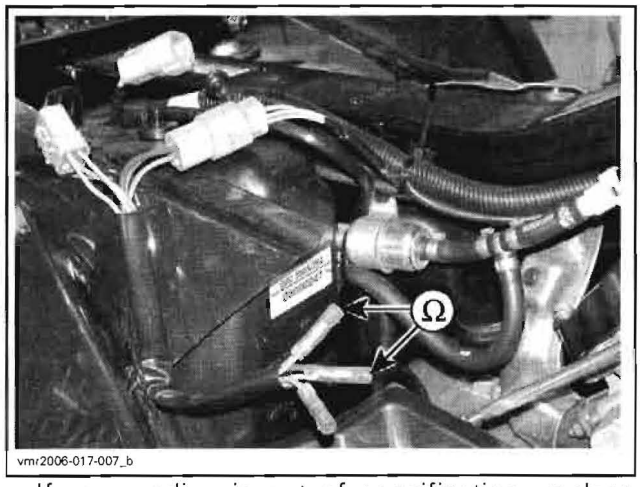

- If any reading is out of specification, replace stator.
- Replug connectors properly.

Static Test: Insulation

Keep connector as for the previous continuity test.

- Set multimeter to Ω.
- Connect multimeter between any YELLOW wire and engine ground.
- Read resistance.

PROBE	RESISTANCE @ 20°C (69°F)
Any YELLOW wire and engine ground	Infinity (open circuit)

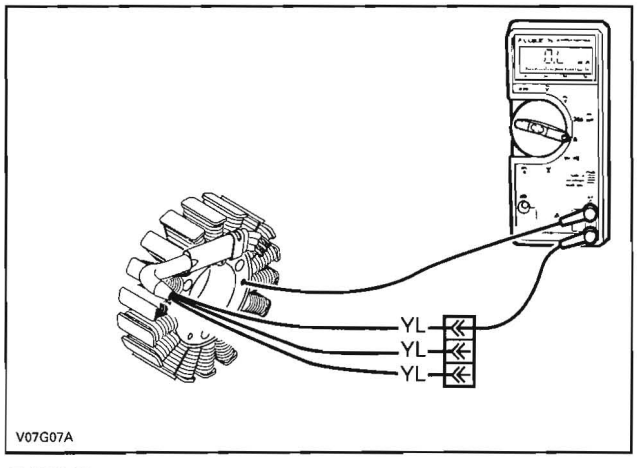

TYPICAL

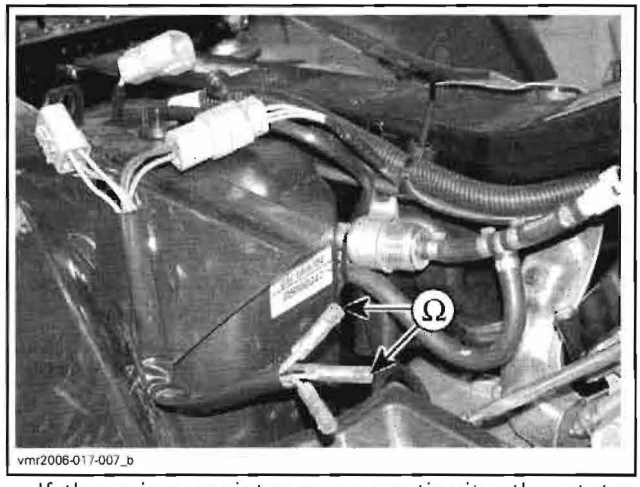

- If there is a resistance or continuity, the stator coils and/or the wiring is grounded and needs to be repaired or replaced.
- Replug connectors properly.

Dynamic Test: AC Voltage

1. Disconnect the voltage regulator/rectifier connectors.

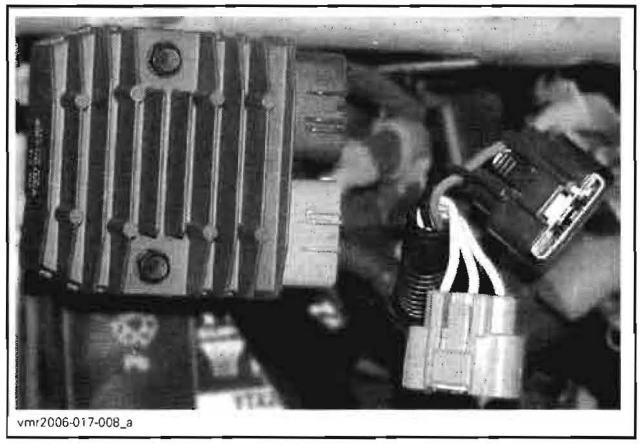

2. Unplug magneto wiring harness connector.

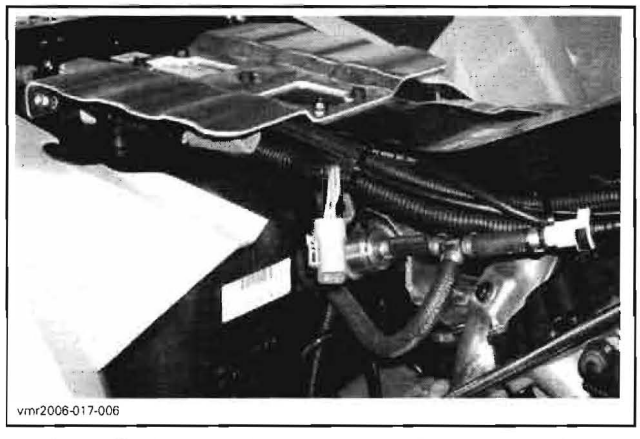

3. Install the 4-pin magneto harness adapter (P/N 529 036 021) between unplugged connectors.

www.midwestmanuals.com
Sales@midwestmanuals.com

www.midwestmanuals.com

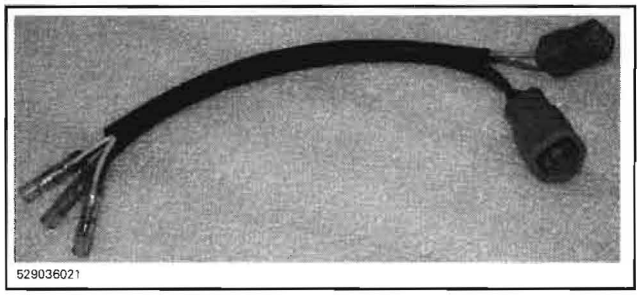
529036021

NOTE: Both connectors must be plugged.

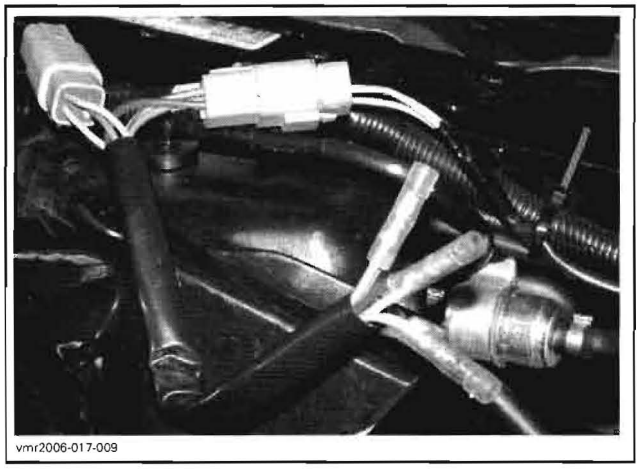
vmr2006-017-009

4. Set multimeter to Vac scale.
5. Start engine.
6. Connect multimeter between YELLOW wires.
7. Read voltage.

TEST ENGINE SPEED	TERMINAL	VOLTAGE
4000 RPM	1 and 2	10 - 25 Vac
	1 and 3	
	2 and 3	

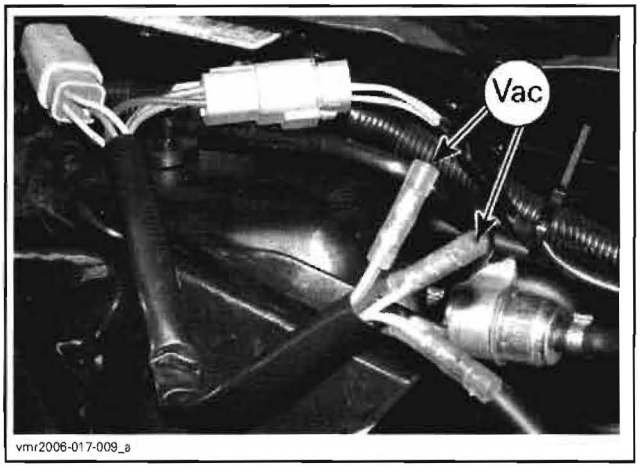

vmr2006-017-009_a

8. If voltage is lower than specification, replace stator.
9. Replug connectors properly.

BATTERY

Battery Information

These vehicles are equipped with a VRLA battery (Valve Regulated Lead Acid). **It is a maintenance-free type battery.**

Refer to battery manufacturer's instructions for proper filling, activation and routine charging procedures.

Troubleshooting

Discharged or Weak Battery

- battery posts and/or cable terminal oxidized
- loose or bad connections
- faulty battery (does not keep a full charge)
- main system fuse burnt, faulty wiring/ connections, voltage regulator/rectifier or stator.

Battery Unloaded Test

NOTE: An unloaded test is made on a battery without discharging current. It is the simplest and most commonly used. However, be aware that the voltage test can be good, while the battery does not have enough power to crank the engine. A load test gives a more accurate condition of the battery.

Check the charge condition using a multimeter.

With a multimeter, voltage readings appear instantly to show the state of charge. Always respect polarity.

FULLY CHARGED BATTERY VOLTAGE
12.6 Vdc minimum

Battery Load Test

This is the best test of the batteries condition. Use a load testing device that has an adjustable load.

Apply a load of 3 times the ampere-hour rating of the battery. At 14 seconds into the test, check battery voltage.

TIME TO MEASURE INTO TEST	VOLTAGE
14 seconds	Min. 10.5 Vdc

www.midwestmanuals.com
Sales@midwestmanuals.com

www.midwestmanuals.com

Battery Removal

⚠ WARNING

Always respect this order for removal; disconnect BLACK (-) cable first. Electrolyte or fuel vapors can be present and a spark may ignite them and possibly cause personal injuries.

Outlander 500/650/800 Series

Release battery strap.

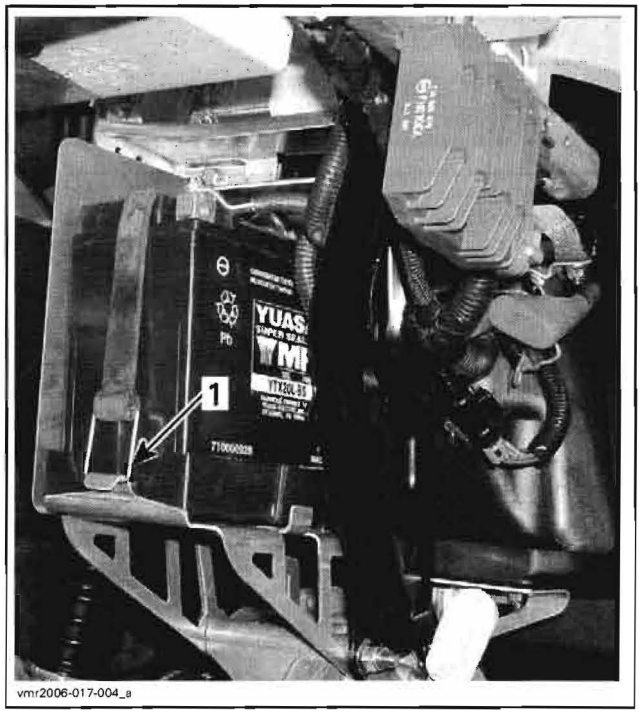

1. Strap

Pull back battery to reach battery posts.



Disconnect BLACK (-) cable first, then the RED (+) cable.

Remove battery.

Renegade Models

Remove storage box.

Unfasten retaining rod.

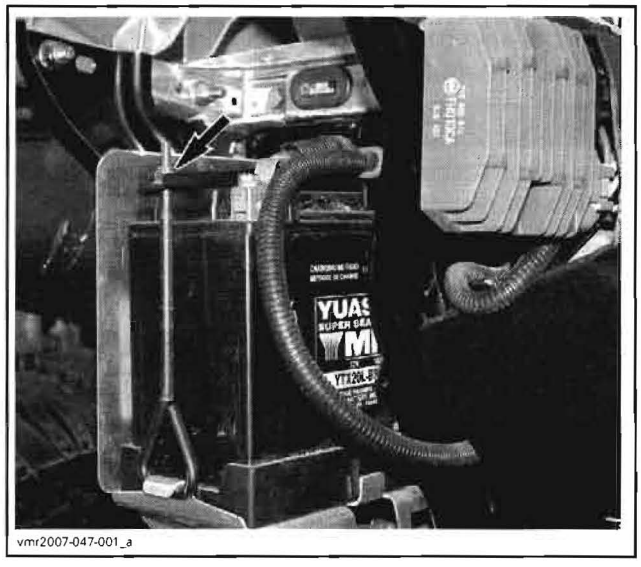

Pull out top bracket.

Disconnect BLACK (-) cable first, then the RED (+) cable.

Remove battery.

Battery Cleaning

Clean the battery rack, cables and battery posts using a solution of baking soda and water.

www.midwestmanuals.com
Sales@midwestmanuals.com

www.midwestmanuals.com

Remove corrosion (if so) from battery cable terminals and battery posts using a firm wire brush. Rinse with clear water and dry well.

Battery Inspection

Visually inspect battery casing for cracks or other damage. If casing is damaged, replace battery and thoroughly clean battery rack with water and baking soda.

Inspect battery posts condition, battery rack mounting, straps and strap attachment points.

Battery Storage

If the battery is in storage or used infrequently, disconnect the battery cables to eliminate drain from electrical equipment.

For extended storage, remove the battery from vehicle.

Clean battery terminals and cable connections using a wire brush. Apply a light coat of dielectric grease (P/N 293 550 004) on terminals.

Clean battery casing using a solution of baking soda and water. Rinse battery with clear water and dry well using a clean cloth.

Regularly charge battery as per manufacturer's recommendations.

For other recommendations during storage, refer to battery manufacturer's instructions.

⚠ WARNING

Ensure to store battery in a safe place, out of reach for children.

Battery Installation

⚠ WARNING

Always connect RED (+) cable first then BLACK (-) cable.

Outlander 500/650/800 Series

Temporary hook battery strap as shown.

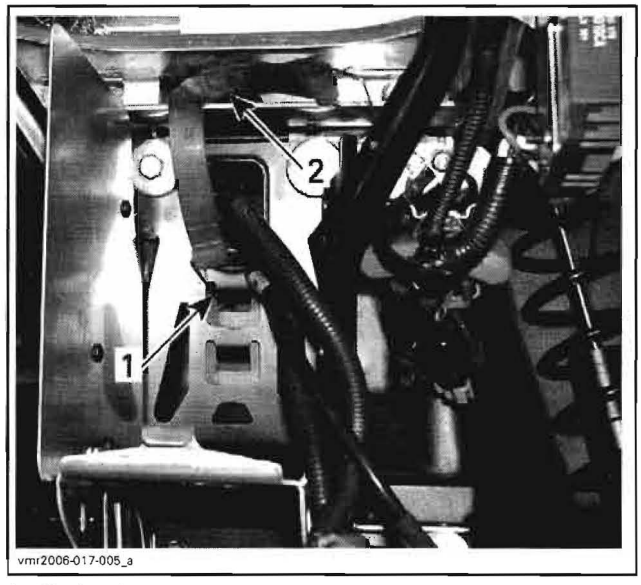

1. Hook at bottom
2. Temporary squeeze strap here

Temporary put battery in rack.

Connect battery cables.

Properly position battery with positive post towards front and negative post at rear. Route cables as shown.

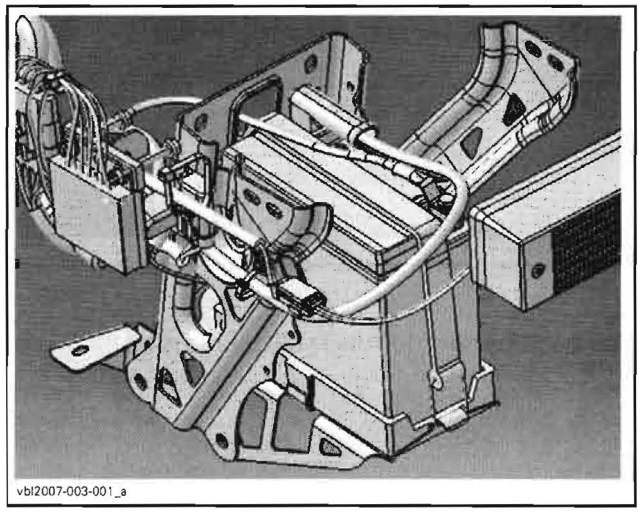

Secure with strap.

www.midwestmanuals.com
Sales@midwestmanuals.com

www.midwestmanuals.com



1. *Secured strap*



Renegade Models

Reinstall battery in vehicle. Secure retaining rod.

Reinstall storage box.

MAIN GROUND

Pull out cover.



Ensure main ground connection is clean and tight.

www.midwestmanuals.com
Sales@midwestmanuals.com

www.midwestmanuals.com

www.midwestmanuals.com
Sales@midwestmanuals.com

www.midwestmanuals.com

STARTING SYSTEM

SERVICE TOOLS

Description	Part Number	Page
ECM adapter	420 277 010	254
Fluke 111 multimeter	529 035 868	253

SERVICE PRODUCTS

Description	Part Number	Page
dielectric grease	293 550 004	259

GENERAL

First ensure the problem is not related to engine mechanical components. If not, test the starting system.

Causes of problems are not necessarily related to starter but may be due to the following:

- burnt fuse
- faulty battery
- D2 diode
- relay
- start button
- ignition Switch
- engine run/stop switch
- starting solenoid
- electrical cables
- connections.

Check these components before removing starter.

Consult the *TROUBLESHOOTING* section for a general view of possible problems.

Engine Cranking Conditions

The following conditions must be met to allow engine cranking.

Ignition switch turned ON
Engine run/stop switch in RUN position
Transmission in Park or Neutral position **NOTE:** Engine can be cranked in other positions if any brake lever is held when pressing start button.
Start button is pressed and held (within 15 minutes since ignition key was turned on. Otherwise, it will be required to turn ignition switch OFF, wait until multifunction gauge turns off then turn ignition back ON).

Battery

To check battery condition, refer to *CHARGING SYSTEM* section.

Ignition Switch and Engine Run/Stop Switch

To validate ignition switch and engine run/stop switch operations, refer to *IGNITION SYSTEM.*

Electrical Cables and Connections

Check all connections, cables and wires. Tighten any loose connections. Replace any chafed wires/cables.

Tools

For best electrical measurement results, use the Fluke 111 multimeter (P/N 529 035 868).

www.midwestmanuals.com
Sales@midwestmanuals.com

www.midwestmanuals.com



To probe the ECM connector terminals, use the ECM adapter (P/N 420 277 010) to prevent damaging terminals. Refer to *ENGINE MANAGEMENT* for more information.

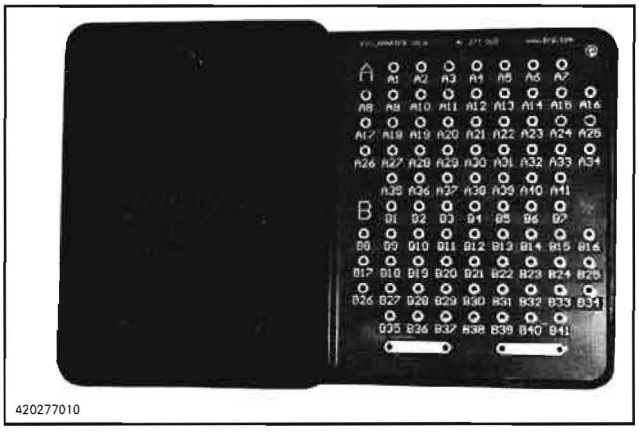

PROCEDURES

FUSES

Make sure the main fuse (F8) and the accessories fuse (F4) is (are) in good condition.

NOTE: If fuse F4 continuously burns, diode D2 is likely defective.

NOTE: The solenoid may be the cause of a burnt fuse. If the solenoid test good, one of the accessory may be defective.

D2 DIODE (starter solenoid)

Diode Test

Remove diode and lay down on a non-metallic table.

Set multimeter as shown.

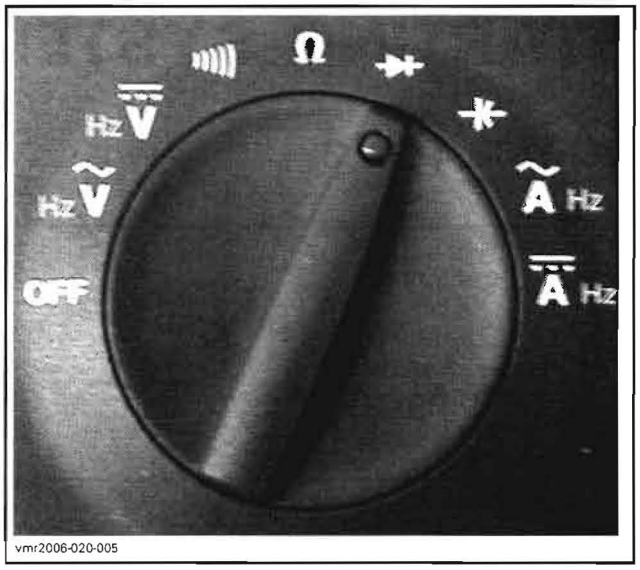

vmr2006-020-005

Probe diode paying attention to proper polarity.

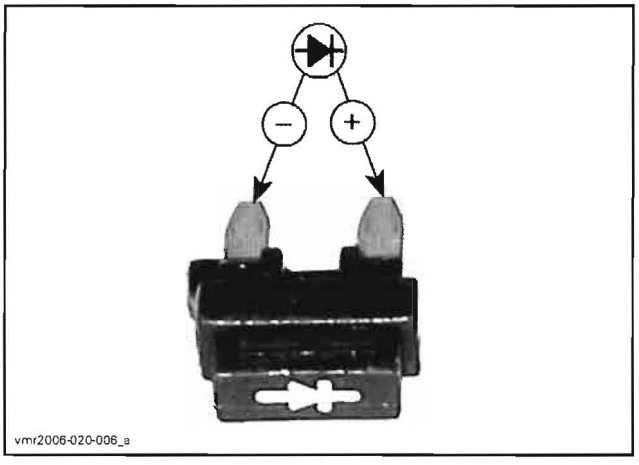

vmr2006-020-006_a

MUST BE OPEN CIRCUIT

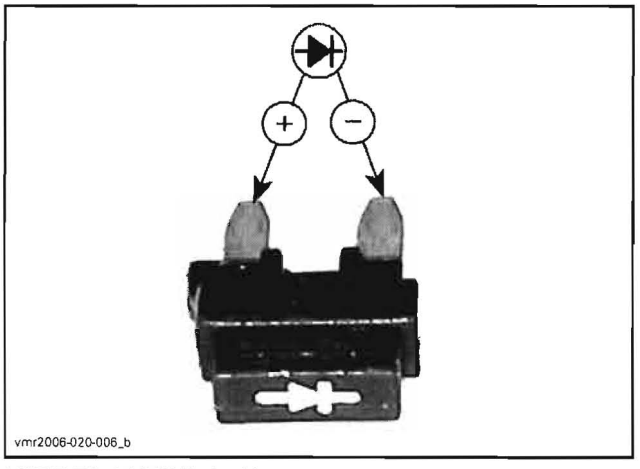

vmr2006-020-006_b

MUST BE AROUND 0.5 V

If diode fail any test, replace it.

www.midwestmanuals.com
Sales@midwestmanuals.com

www.midwestmanuals.com

Diode, Installation

Pay attention to the installation direction to allow proper operation.

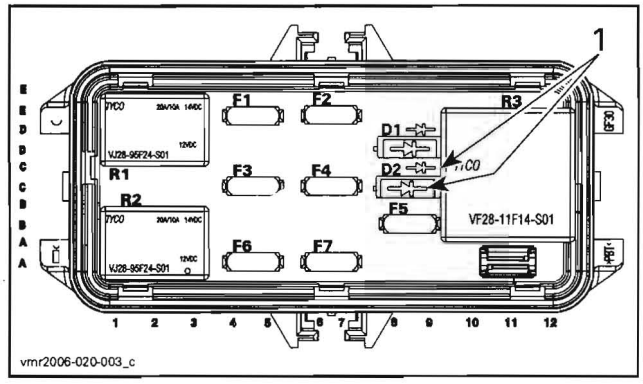

1. Position symbol on diode in same direction as symbol on fuse holder

START BUTTON

Quick Test

When engine does not crank, here is a quick tip to see if start button works:

- Set engine run/stop switch in RUN position.
- Turn ignition switch on. Wait approx. 5 seconds so that fuel pump stops.
- Press start button. You should hear fuel pump run for approximately 5 seconds. If so, the start button is working.
- If start button does not work, proceed with the tests below.
- If start button is working, depress brake pedal and try start button again.
- If engine starts, check the gearbox position sensor (GBPS). Refer to *GEARBOX*.
- If engine does not start, check the other components of the starting system.

Test with B.U.D.S.

Use the vehicle communication kit (VCK) with the B.U.D.S. software. Use the **Monitoring** tab. Press the vehicle's start button and look at the **Start button** LED.

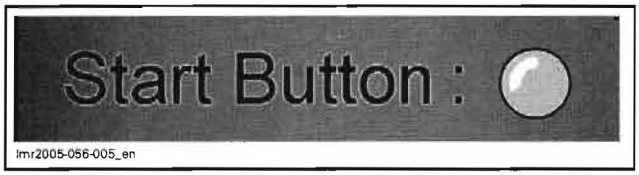

It should turn on, indicating the starting system is working on the input side of the starting system (start button, ECM and wiring).

If it turns on, you are knowing now the problem is on the output side of the starting system (ECM output signal to starting solenoid, wiring harness going to the solenoid and starter motor).

If it does not turn on, check the start button as follows.

Start Button Resistance Test

Remove center panel and dashboard. Refer to *BODY*.

Using a multimeter, measure the resistance between the following wires.

POSITION	MULTIFUNCTION SWITCH CONNECTOR (MG2) PIN (start)		RESISTANCE
Switch released	1	6	Infinite (0L)
Switch depressed and held			0.6 Ω max.

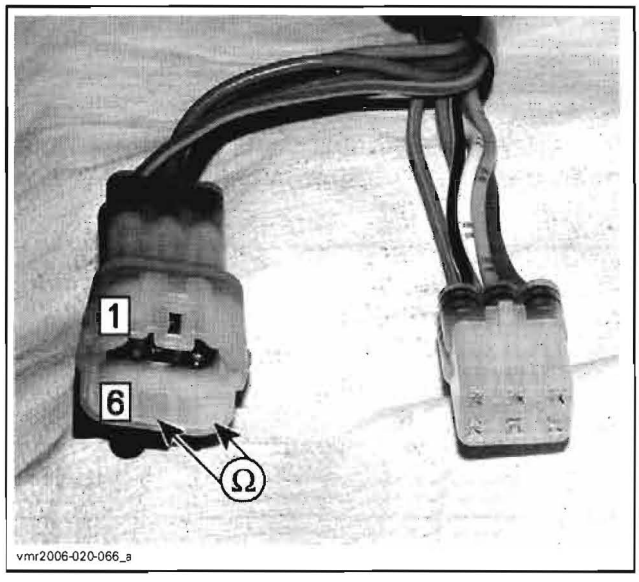

Replace multifunction switch if defective.

If switch tests good, check wiring as follows.

Start Button Wiring Test

Disconnect ECM connector "B".

Test continuity of wiring between start button connector and ECM connector as follows.

www.midwestmanuals.com
Sales@midwestmanuals.com

www.midwestmanuals.com

CONNECTOR		RESISTANCE @ 20°C (68°F)
ECM	MULTIFUNCTION SWITCH (MG2) PIN (harness side) (start)	
PIN		
B-21	1	1 Ω max.

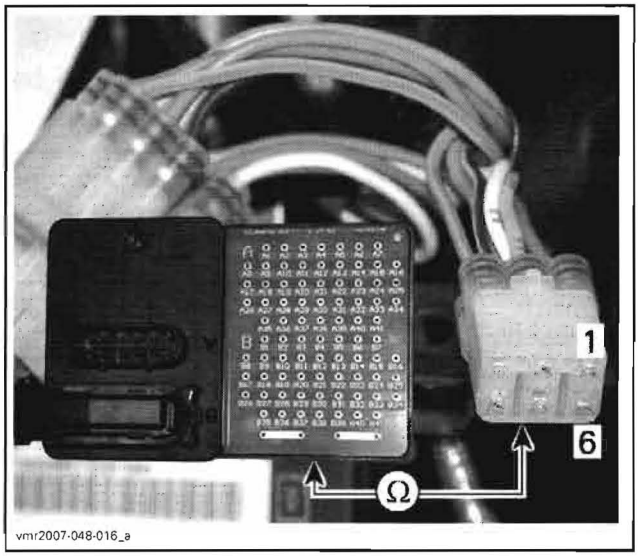

Reconnect ECM connector "B".

If switch tests good, test continuity of wiring between start button connector and battery ground as follows.

CONNECTOR		RESISTANCE @ 20°C (68°F)
MULTIFUNCTION SWITCH (MG2) (start)	BATTERY	
PIN		
6	Battery ground	1 Ω max.

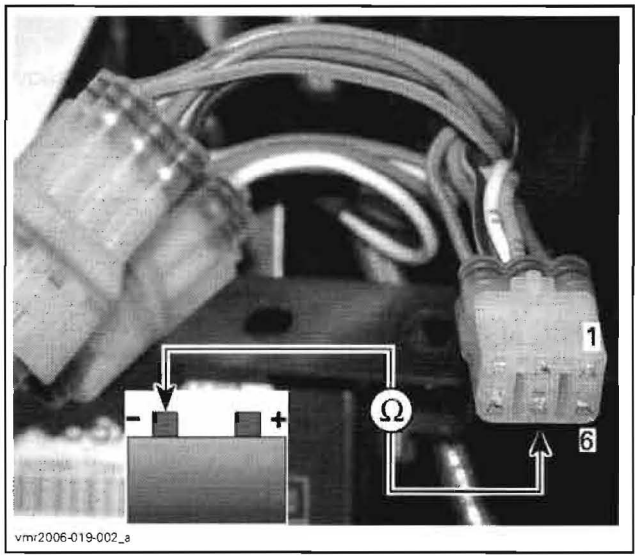

If wiring is faulty, repair/replace harness and/or connectors. If it tests good, check D2 diode. Refer to *D2 DIODE (STARTER SOLENOID)* above.

STARTING SOLENOID

NOTE: Solenoid is located on the frame, besides battery rack.

Pull out cover.

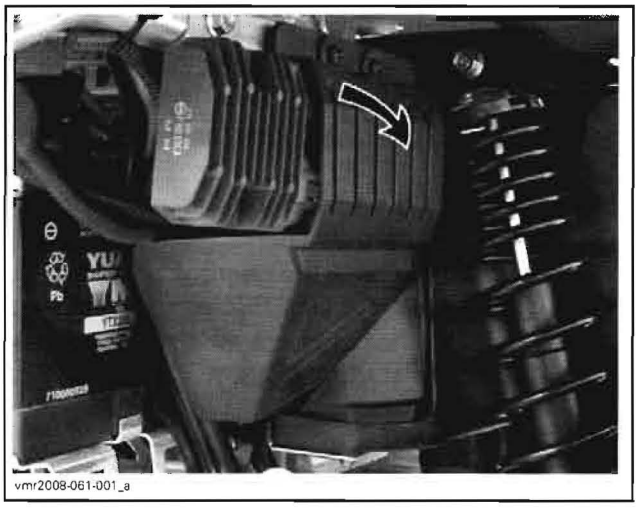

www.midwestmanuals.com
Sales@midwestmanuals.com

www.midwestmanuals.com


vmr2006-019-003_a

Inspect connections and clean as necessary.

Solenoid Signal Test

Disconnect connector with ORANGE/GREEN wire from solenoid and check voltage as follows.

Turn ignition key ON and set engine run/stop switch to RUN.

Read voltage (do not press start button).

SOLENOID CONNECTOR (harness side)	VOLTAGE
ORANGE/GREEN with battery ground	12 Vdc

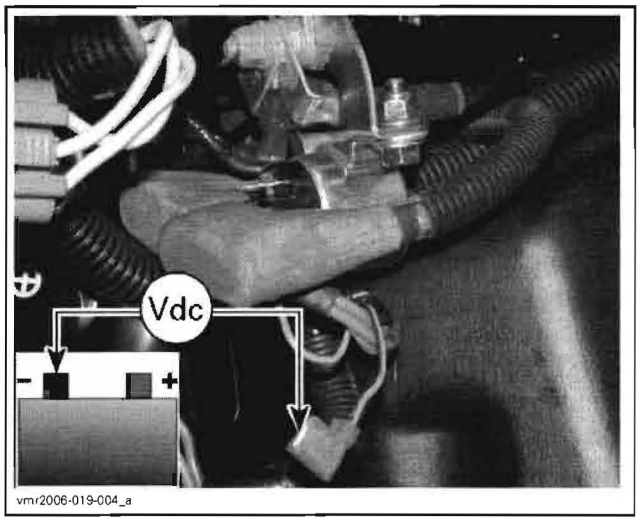

vmr2006-019-004_a

If voltage is not adequate, check accessories fuse (F4). If fuse is good, test continuity of wiring between solenoid and fuse F4.

If voltage is adequate, do the following test.

Reconnect ORANGE/GREEN terminal to solenoid.

Disconnect ORANGE/BROWN terminal from solenoid.

Connect a jumper wire between solenoid terminal and battery ground.

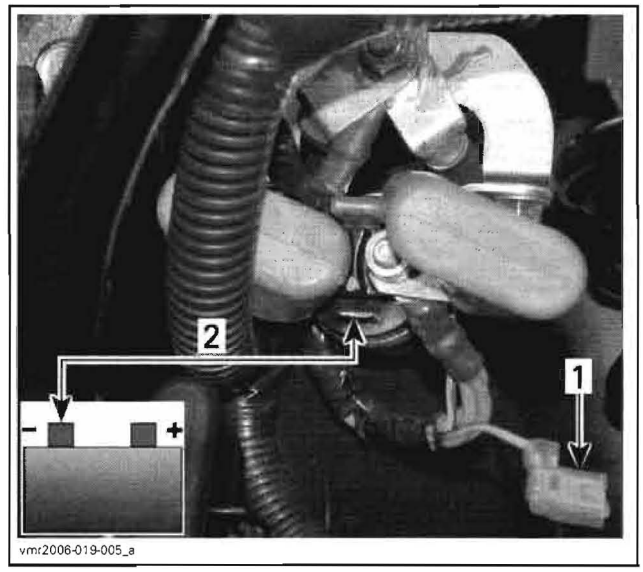

vmr2006-019-005_a

1. Disconnect ORANGE/BROWN terminal
2. Jumper to battery ground

If solenoid works, check wiring/connectors for continuity as follows.

ECM CONNECTOR PIN	SOLENOID TERMINAL (harness side)	RESISTANCE @ 20°C (68°F)
B-31	ORANGE/BROWN	Close to 0 Ω

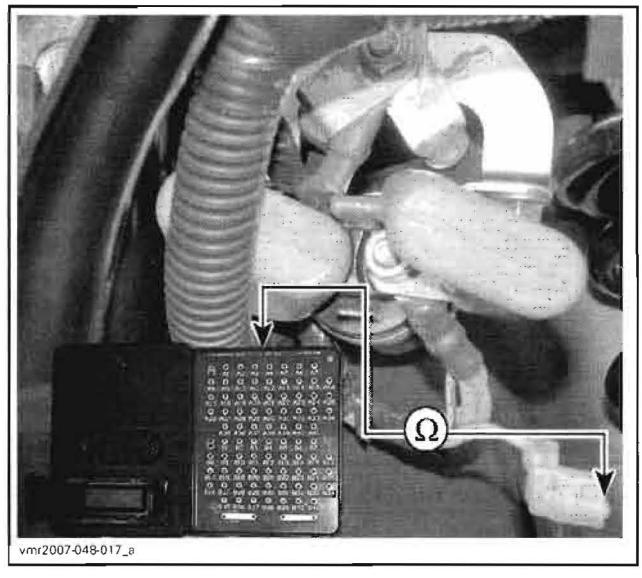

vmr2007-048-017_a

If solenoid does not work, test solenoid.

Static Test: Continuity

Disconnect terminals from solenoid.

With a multimeter, check primary winding resistance as follows.

www.midwestmanuals.com
Sales@midwestmanuals.com

www.midwestmanuals.com

SOLENOID TERMINAL		MEASUREMENT
		RESISTANCE @ 20°C (68°F)
A	B	Approximately 5 Ω

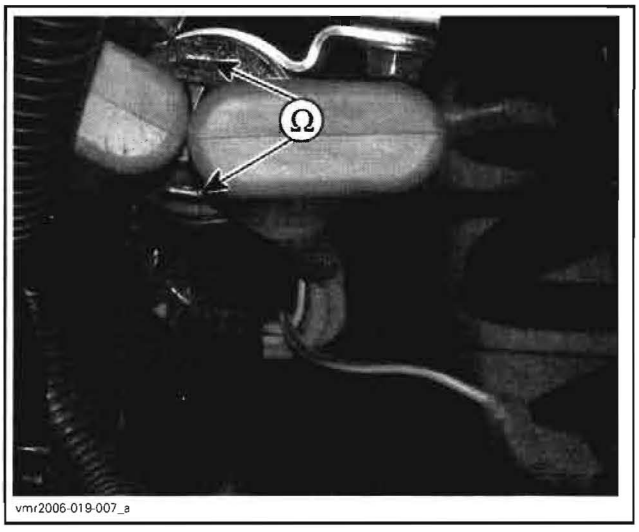

vmr2006-019-007_a

Check for stuck solenoid plunger.

SOLENOID CONNECTOR		MEASUREMENT
Battery post	Starter post	Open circuit

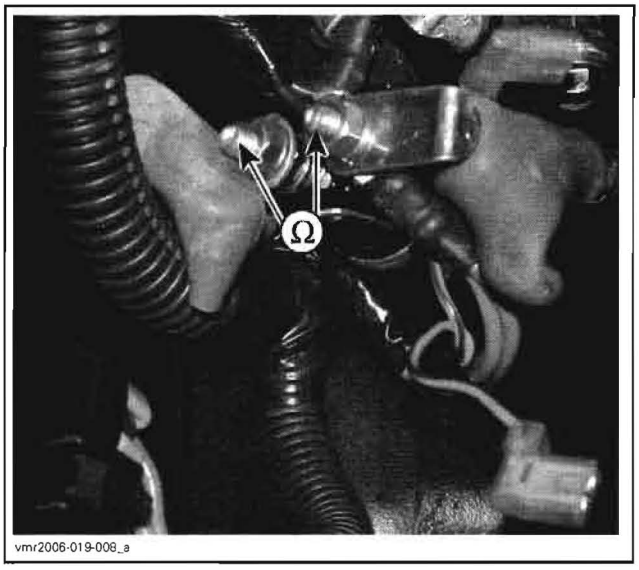

vmr2006-019-008_a

If any measurement is out of specification, replace solenoid.

Dynamic Test

Turn ignition key ON and set engine run/stop switch to RUN.

For the following test, we do not want the engine to run. Set ECM in engine drowned mode as follows:

- Depress and hold throttle lever at full throttle position.
- Install a rubber band or some tape to maintain throttle lever in this position while testing.

Depress start button and while engine is cranking, measure the voltage drop as follows with a multimeter.

SOLENOID CONNECTOR		MEASUREMENT
Post coming from battery	Post going to starter	0.2 Vdc max.

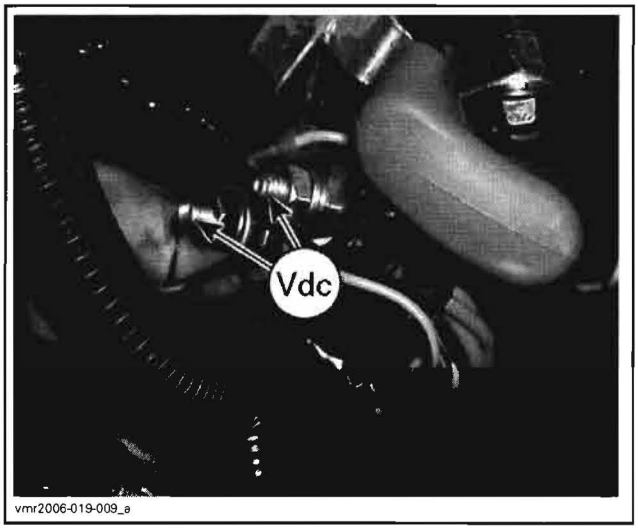

vmr2006-019-009_a

⚠ WARNING

Remove any rubber band or tape from throttle lever to release it.

If voltage is out of specification, replace solenoid.

If solenoid tests good, check the electric starter.

Reinstall cover.

ELECTRIC STARTER

Starter Test

Using booster cables, carefully supply current from the battery directly to the starter. Connect the BLACK (-) cable first. Then connect the remaining jumper cable from the battery then to the starter.

If starter turns ensure the cables/connections from solenoid to starter are in good condition.

If starter does not turn, replace starter.

www.midwestmanuals.com
Sales@midwestmanuals.com

www.midwestmanuals.com

Starter Removal

Turn OFF ignition switch.

Disconnect BLACK (-) cable from battery.

⚠ WARNING

Always disconnect BLACK (-) cable first and reconnect last.

Remove the RH side cover and the engine cover (refer to *BODY*).

Disconnect RED (+) cable from starter.

Clean starter area.

Remove starter mount screw.

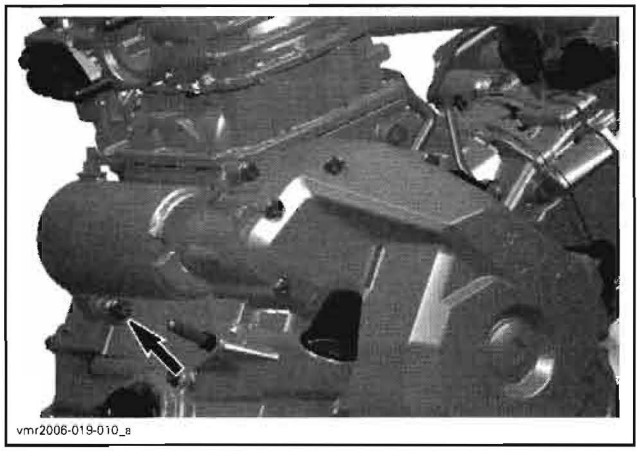

vmr2006-019-010_a

SOME PARTS REMOVED FOR CLARITY PURPOSE ONLY

Carefully pry starter out of its housing.

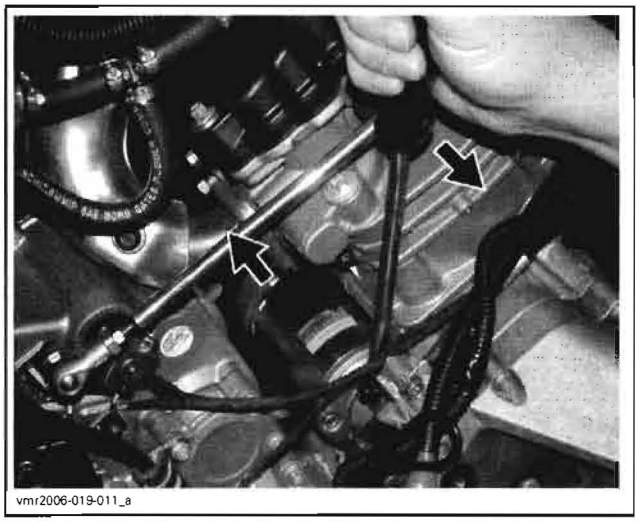

vmr2006-019-011_a

Pull starter out.

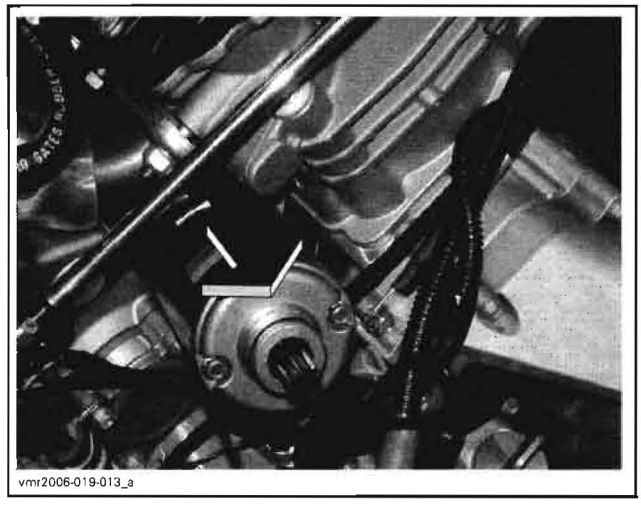

vmr2006-019-013_a

Starter Installation

Installation is the reverse of removal procedure. However, pay particular attention to the following.

Make sure that starter and engine mating surfaces are free of debris. Serious problem may arise if the starter is not properly aligned.

Bring starter close to its location. Rotate it so that its mounting ear allows installation in engine housing. Push in place and align mounting ear to install screw.

Torque starter screw to 25 N•m (18 lbf•ft).

Connect the RED (+) cable to the starter and torque nut to 6 N•m (53 lbf•**in**). Apply dielectric grease (P/N 293 550 004) on terminal and nut.

First connect RED (+) cable to battery then connect the BLACK (-) cable.

⚠ WARNING

Always connect RED (+) cable first then BLACK (-) cable last. Whenever connecting the RED (+) cable to the starter motor, make sure the battery cables are disconnected to prevent electric shock.

Test starter operation.

www.midwestmanuals.com
Sales@midwestmanuals.com

www.midwestmanuals.com

www.midwestmanuals.com
Sales@midwestmanuals.com

www.midwestmanuals.com

DIGITALLY ENCODED SECURITY SYSTEM (DESS)

GENERAL

NOTE: It is a good practice to check for fault codes using B.U.D.S. software as a first troubleshooting step. Refer to *EMS DIAGNOSTIC*.

The ignition key contains a ROM chip with a unique digital code that is the equivalent of a unique teeth pattern on a conventional key.

When the ignition key is turned ON, the ECM is powered up as well as the multifunction speedometer and the accessories. Then, the ECM reads the ignition key and, if it is not recognized, no engine starting will be possible.

NOTE: When a key is not recognized by the ECM, INVALID KEY will be displayed in the multifunction speedometer.

To work on a particular DESS-equipped vehicle, the ignition key must have been programmed first.

NOTE: All ignition keys have the same teeth pattern. Therefore, they can be used and turned in the switch of any DESS-equipped vehicle. However, unless the DESS system recognizes (in the ECM) a valid programmed key, the engine starting will not be allowed.

NOTE: Actually, it is the memory of the ECM that is programmed to recognize the digital code of the ignition key.

The system is quite flexible. Up to 8 ignition keys may be programmed in the memory of the ECM. They can also be erased individually or all at once.

Note that the DESS circuitry is already activated on all new ECM.

DESS KEY PROGRAMMING

Use the latest B.U.D.S. software available from BOSSWeb. Refer to *COMMUNICATION TOOLS AND B.U.D.S. SOFTWARE* for proper connection instructions.

The B.U.D.S. software is designed to allow, among other things, the programming of ignition key(s) and entering customer information.

For more information pertaining to the use of the software B.U.D.S., use its help which contains detailed information on its functions.

⚠ WARNING

If the computer you are using is connected to the 110 Vac power outlet, there is a potential risk of electrocution when working in contact with water. Be careful not to touch water while working with the VCK.

Connect the MPI or the MPI-2 interface as described in *COMMUNICATION TOOLS AND B.U.D.S. SOFTWARE*.

Install key in ignition switch and turn it to ON.

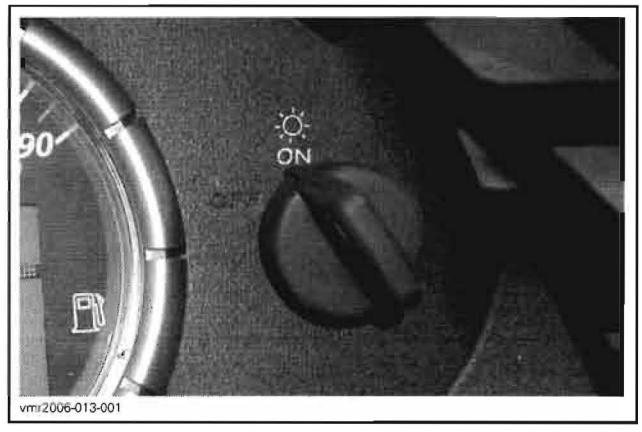

Ensure engine run/stop switch is in RUN position.



1. Run

Read ECM using **Read Data** button.

www.midwestmanuals.com
Sales@midwestmanuals.com

www.midwestmanuals.com

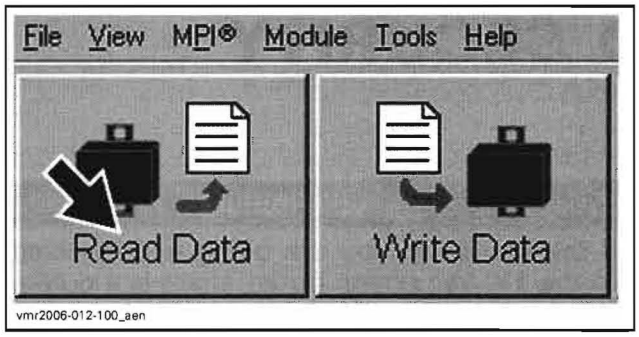

Turn ignition key OFF and remove key.

Install the new key to be programmed.

Turn ignition key ON.

Click on **Keys** tab.

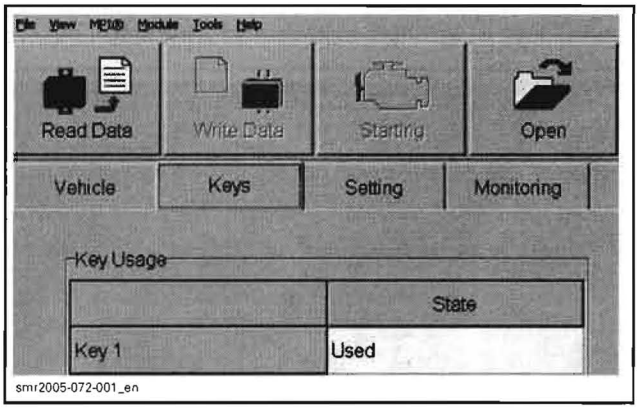

Click on ADD KEY button on bottom of screen.

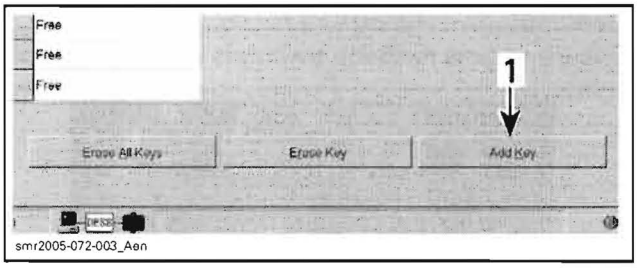

1. Click on this tab

A new key is now saved in the computer.

NOTE: To program other key(s), install a new key in ignition switch, turn it ON and click again on **Add Key** tab.

Ensure to save new data in ECM using **Write Data** button.

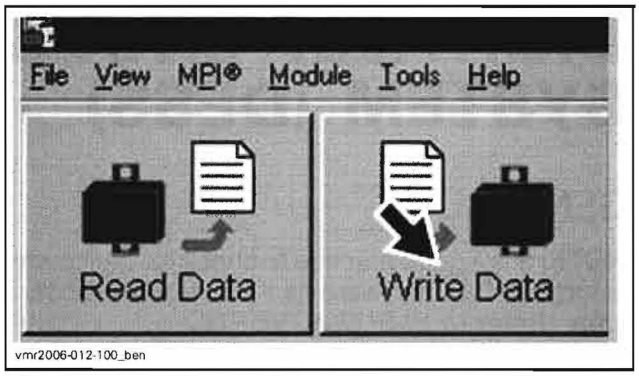

TROUBLESHOOTING

If DESS key is not recognized by the ECM, key is defective or there is a wiring problem, CHECK ENGINE light will turn on and a message will be displayed in the multifunction speedometer.

Ensure DESS wiring is not reverted (BLACK/GREEN and ORANGE/RED).

To test wiring and ignition switch, refer to *IGNITION SYSTEM* section.

www.midwestmanuals.com
Sales@midwestmanuals.com

www.midwestmanuals.com

LIGHTS, GAUGE AND ACCESSORIES

SERVICE TOOLS

Description	Part Number	Page
Fluke 111 multimeter	529 035 868	263–265
Back probe test wires	529 036 063	264

GENERAL

NOTE: For a complete overview of the vehicle electrical system, refer to *ENGINE MANAGEMENT*.

⚠ WARNING

It is recommended to always disconnect the battery when replacing any electric or electronic parts. Always disconnect battery exactly in the specified order, BLACK (-) cable first. Do not place tools on battery.
Clean threads before applying a threadlocker. Refer to *SELF-LOCKING FASTENERS* and *LOCTITE APPLICATION* at the beginning of this manual for complete procedure.
During assembly/installation, use the torque values and service products as in the exploded views. Torque wrench tightening specifications must strictly be adhered to. Locking devices (e.g.: locking tabs, elastic stop nuts, self-locking fasteners, etc.) must be replaced with new ones.

Diagnostic

The following gives general electrical-related problems. For specific system-related problems, refer to proper system section.

It is possible that a component seems to operate in static condition but in fact, it is defective. In this case, the best way to solve this problem is to remove the original part and replace it with a known good component.

IMPORTANT: When solving an electrical problem, the first thing to do is to check battery condition as well as its cables and connections. Also ensure the ignition switch is turned on and engine run/stop switch is set to RUN. Check solidity (close to battery) and related-circuit fuse condition with an ohmmeter (visual inspection could lead to false results). Also visually examine harness and connections.

IMPORTANT: In an usual electric circuit, the battery supplies a switch which then supplies the electric component. Therefore the switch opens and closes the positive side of the circuit. In circuits controlled by the ECM, the battery supplies the electric component and the ECM works as a switch to complete the circuit to the ground. Take this into account when troubleshooting the electrical system.

Pay attention to ground wires.

Checking for Shorts Between 2 Wires

When checking continuity of a wire in a circuit, wires should be checked for short circuit as follows.

Make sure to isolate circuit by unplugging connectors.

Let's suppose that the circuit to be checked has a RED and a BLACK wire. Using an ohmmeter, measure the resistance between the RED and the BLACK wire. The resistance should be infinite (0L). Otherwise, there is a short circuit between both wires. We must therefore identify and correct the fault.

Recommended Tools

For best results, use the Fluke 111 multimeter (P/N 529 035 868).



529 035 868

www.midwestmanuals.com
Sales@midwestmanuals.com

www.midwestmanuals.com

To easily probe wire terminals through the back of their connectors, Back probe test wires (P/N 529 036 063) can be used.

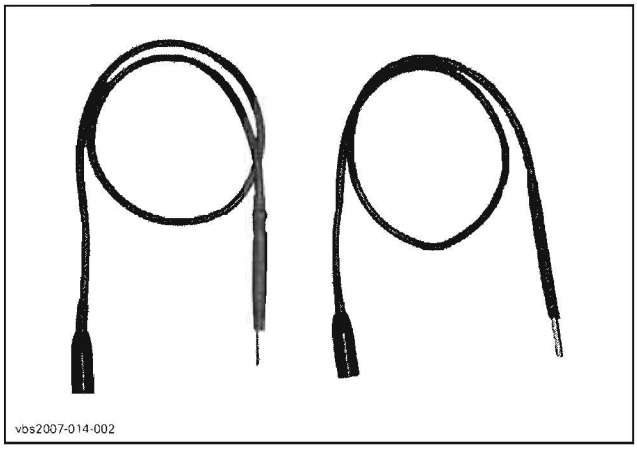

They can be inserted at the end of the standard probes of the Fluke 111 multimeter (P/N 529 035 868).

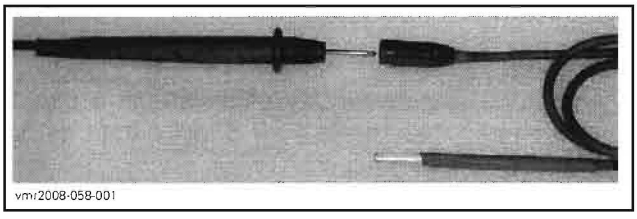

Electrical Connectors

Pay particular attention to ensure that pins are not out of their connectors or damaged. The troubleshooting procedures cover problems not resulting from one of these causes.

CAUTION: Ensure all terminals are properly crimped on wires and connector housings are properly fastened. replacing any electric or electronic part(s), always check electrical connections. Make sure that they are tight and they make good contact and are corrosion-free. The voltage and current might be too weak to go through dirty wire pins. Check the posts for signs of moisture, corrosion or if they look dull. Clean pins properly and then coat them with silicon-based dielectric grease or other appropriate lubricant (except if otherwise specified) when reassembling them. See connectors information in *ELECTRICAL CONNECTORS*.

PROCEDURES

FUSES

If a fuse is damaged, replace it with one of the same rating.

CAUTION: Do not use a higher rated fuse as this can cause severe damage.

Fuses are located in the front service compartment and at the back near battery (under cover).

Fuses in Front Service Compartment

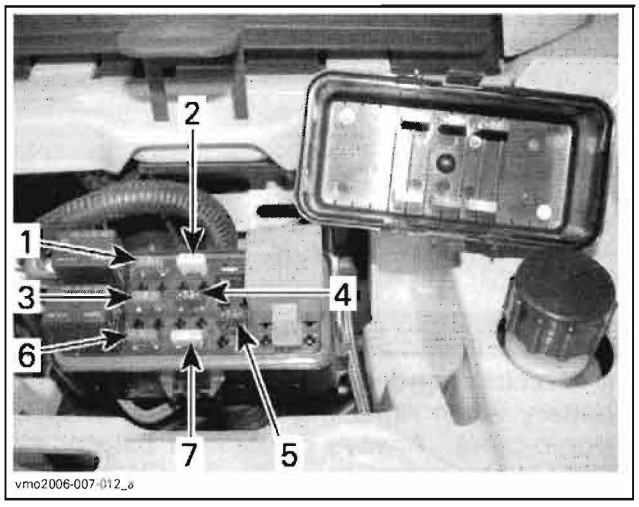

FRONT — FUSES LOCATION
1. *(F1) Ignition coils*
2. *(F2) Cooling fan*
3. *(F3) Fuel injectors*
4. *(F4) Accessories*
5. *(F5) Fuel pump*
6. *(F6) Engine Control Module (ECM)*
7. *(F7) Accessories*

NOTE: A short circuited D5 or D6 diode will cause fuse F7 to burn. Refer to *D5 AND D6 DIODES (WINCH RELAY)* further in this section.

Fuses located at the Rear

Remove cover.

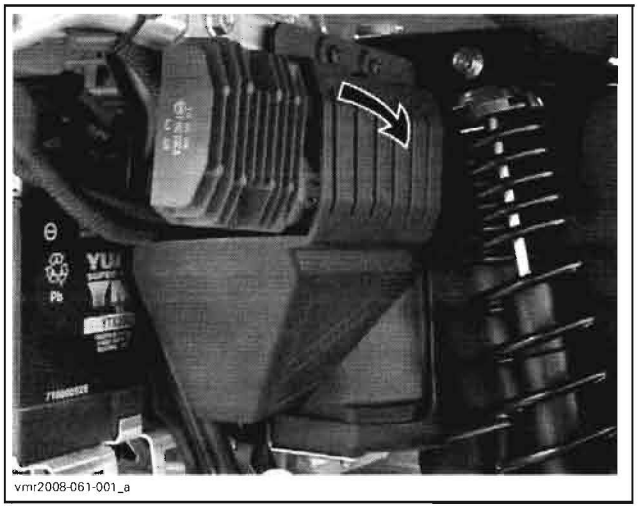

www.midwestmanuals.com
Sales@midwestmanuals.com

www.midwestmanuals.com

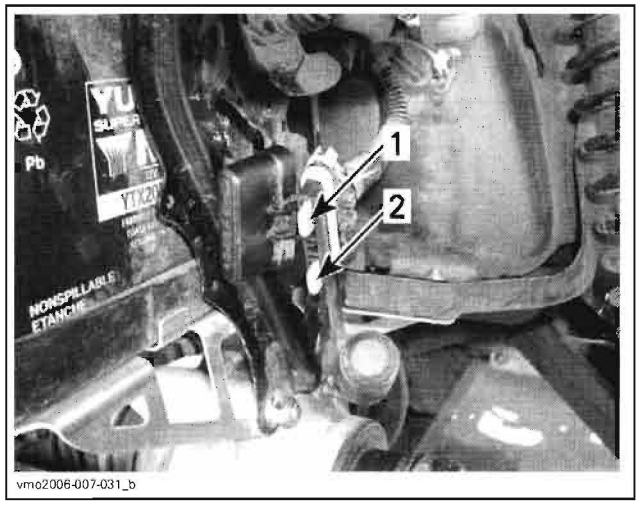

REAR — FUSES LOCATION
1. *(F9) Accessories*
2. *(F8) Main*

ACCESSORY RELAY (R3)

NOTE: Relay may be inverted by 180° at installation and it will work correctly. Ensure to align tabs of relay with terminals of fuse holder at installation.

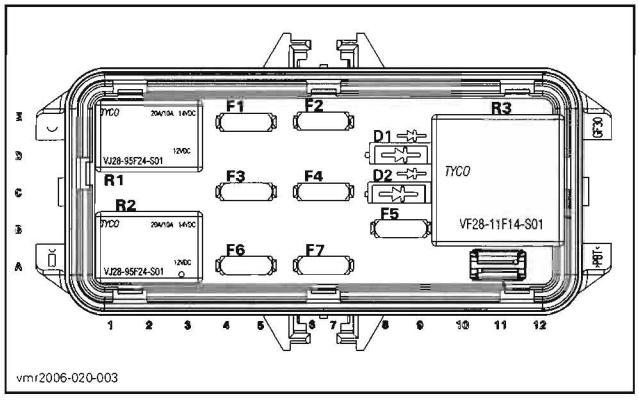

R3: Accessory relay

The easiest way to check a relay is to remove it and bypass it with a jumper. If the components then work, test relay. If it tested good, check wiring/connectors. See illustration to find where to bypass the relay.

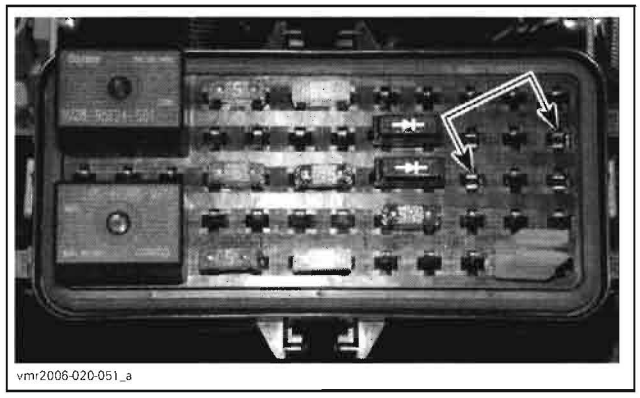

RELAY R3 (ACCESSORIES)

Relay Continuity Test

Remove relay.

Use the Fluke 111 multimeter (P/N 529 035 868), and select the Ω position.

Probe relay as follows.

TERMINAL		RESISTANCE
30	87	Open circuit (OL)

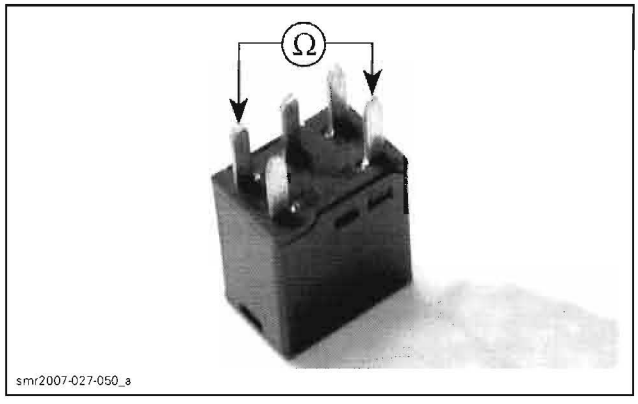

Connect battery as shown and probe relay again as follows.

TERMINAL		RESISTANCE
30	87	0.5 Ω max. (continuity)

www.midwestmanuals.com
Sales@midwestmanuals.com

www.midwestmanuals.com

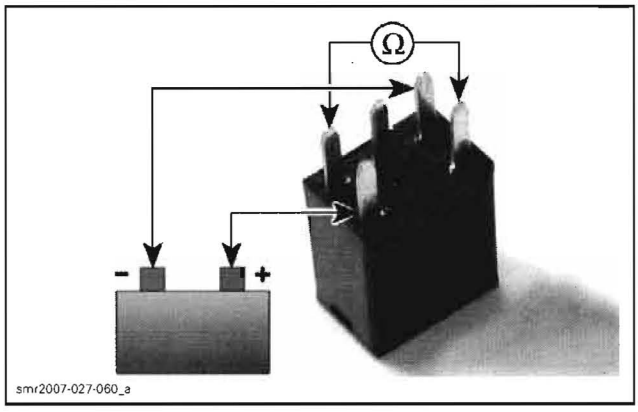

smr2007-027-060_a

If relay failed any test, replace it.

MULTIFUNCTION GAUGE

Unit Selection (MPH vs km/h)

The multifunction gauges are factory preset in Imperial units but it is possible to change them to Metric units

Use B.U.D.S. software. Go in **Setting** tab and use **Cluster Scale**.

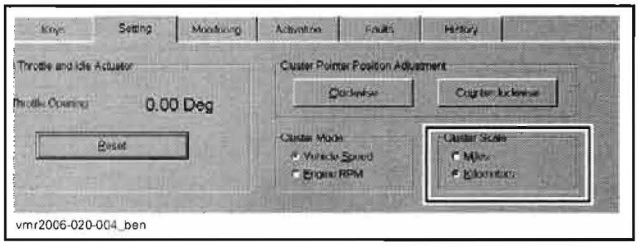

vmr2006-020-004_ben

Outlander 500/650/800 Series



vmo2008-001-020_b

1. Unit selection

Gauge Operation

Outlander 500/650/800 Series

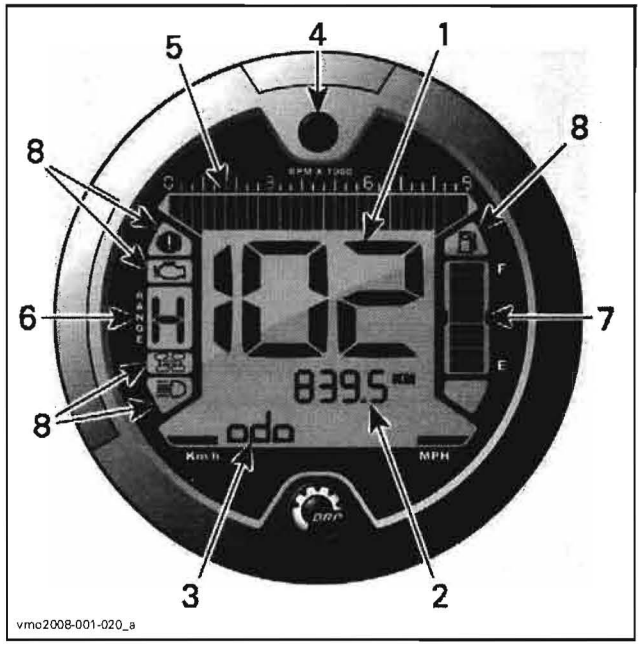

vmo2008-001-020_a

1. *Display 1 (speedometer)*
2. *Display 2 (mode)*
3. *Display 3 (mode/message)*
4. *Display selector button*
5. *Tachometer*
6. *Transmission position display*
7. *Fuel level display*
8. *Indicator lamps*

Display 1 (Speedometer)

This display will show vehicle speed.



vmo2008-001-020_g

1. *Vehicle speed*
2. *Unit selection*

www.midwestmanuals.com
Sales@midwestmanuals.com

www.midwestmanuals.com

Display 2 (mode)

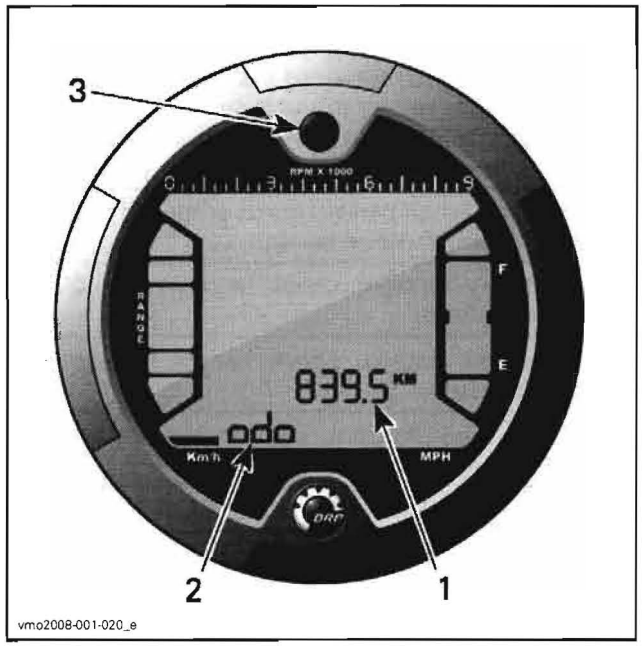

1. Display 2 (mode)
2. Display 3 (mode/message)
3. Selector button

By pressing the selector button, the following modes can be displayed:

- odometer (ODO)
- trip meter (TRIP)
- hour meter (TRIP TIME)
- vehicle hour meter (ENGINE HOURS)
- engine revolutions per minute (RPM).

Display 3 (mode/message)

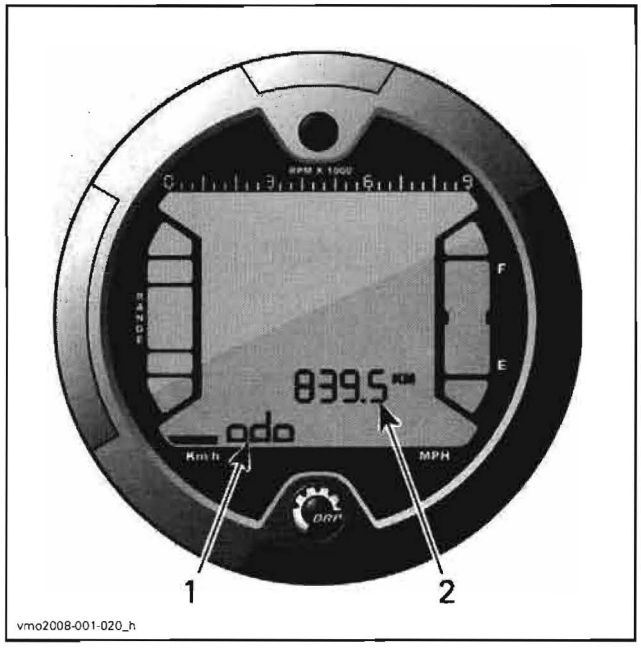

1. Display 3 (mode/message)
2. Display 2 (mode)

This display will show either an abbreviation of the mode selected in display 2 or will communicate important messages to the operator if an anomaly occurs.

Abbreviation Mode:

- ODO (odometer)
- TRIP (trip meter)
- TRIP TIME (hour meter)
- ENGINE HOURS (vehicle hour meter)
- RPM (engine revolutions per minute).

www.midwestmanuals.com
Sales@midwestmanuals.com

www.midwestmanuals.com

Message Mode:

MESSAGE	PILOT LAMP(S) ON	DESCRIPTION
INVALID KEY	Check engine	Indicates that you have used the wrong ignition key, use the proper key for this vehicle. It is also possible that the ignition key has a bad contact, remove and clean key.
PARK BRAKE	Parking brake	Is displayed when parking brake is applied for more than 15 seconds (while riding).
LO BATT	Check engine	Low battery voltage, check battery voltage and charging system.
HI BATT	Check engine	High battery voltage, check battery voltage and charging system.
LOW OIL (1)	Check engine	Engine low oil pressure, stop engine immediately and check oil level.
HI TEMP (2)	Check engine	Engine is overheating, refer to *COOLING SYSTEM.*
LIMP HOME	Check engine	Serious fault detected by the engine management that can change the normal operation of the engine. Check engine indicator lamp will also blink, refer to *ENGINE MANAGEMENT* for more details.
CHECK ENGINE	Check engine	Engine management fault. Check engine indicator lamp will also be ON, refer to *ENGINE MANAGEMENT* for more details.
MAINTENANCE SOON	Check engine	Periodic maintenance required. **NOTE:** To reset message, use B.U.D.S. software and click **Reset Service** button in **Vehicle** tab.
NO ECM COMMUNICATION	Check engine	Communication error between multifunction gauge and engine control module (ECM). Refer to *ENGINE MANAGEMENT.*

CAUTION: (1) If the light does not turn off right after engine starting, stop engine. Check engine oil level. Refill if necessary. If the oil level is good, see *LUBRICATION.*

CAUTION: (2) If the light does not turn off right after engine starting, stop engine. See *COOLING SYSTEM.*

Display Selector Button

Button used to navigate between modes or to reset data depending on the feature selected.

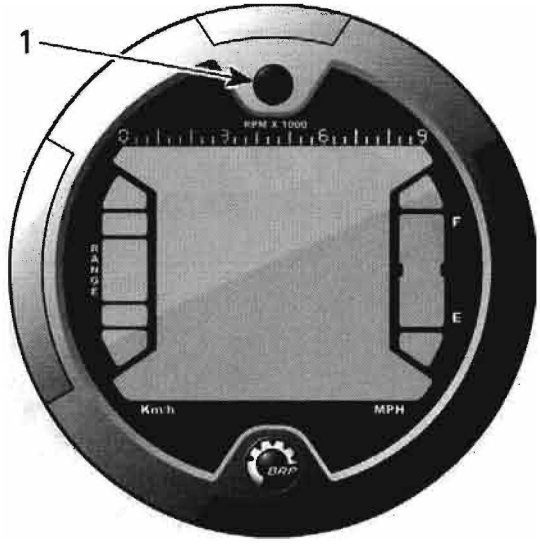

1. Selector button

www.midwestmanuals.com
Sales@midwestmanuals.com

www.midwestmanuals.com

Tachometer

Measures engine revolutions per minute (RPM). Multiply by 1000 to obtain the actual revolutions.

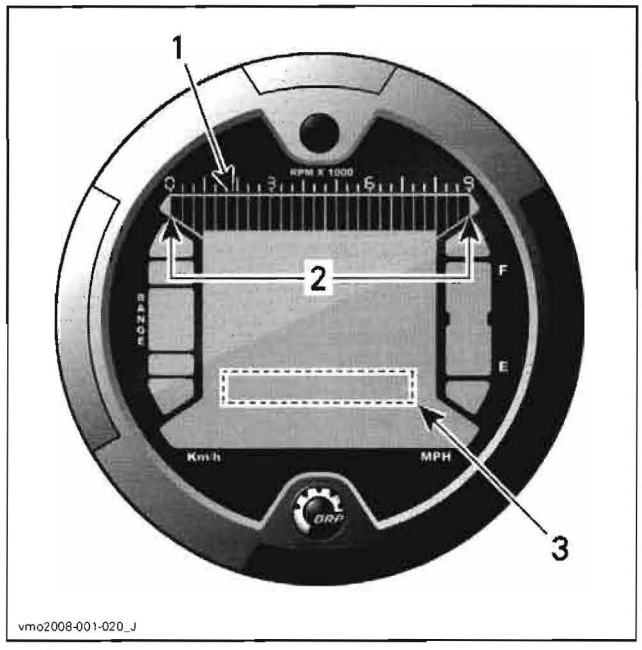

1. *Tachometer*
2. *Operating range*
3. *Tachometer via display 2 (mode)*

Transmission Position Display

This display will show transmission position.

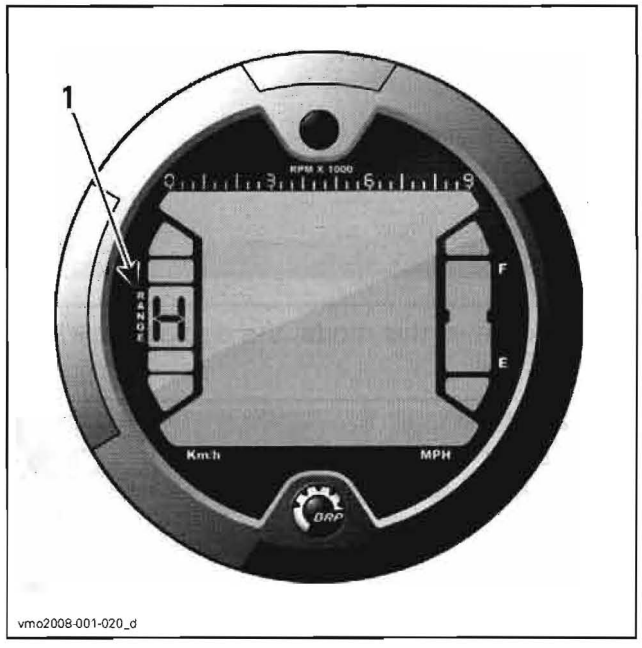

1. *Transmission position*

DISPLAY	FUNCTION
P	Park
R	Reverse
N	Neutral
H	High gear
L	Low gear

NOTE: If the letter "E" is displayed in the transmission position display, it means that there is a electrical communication error. Refer to *ENGINE MANAGEMENT*.

Fuel Level Display

Bar gauge that continuously indicates the amount of fuel left in the fuel tank.

Also, an indicator lamp will indicate a low-fuel condition as only one bar is displayed.

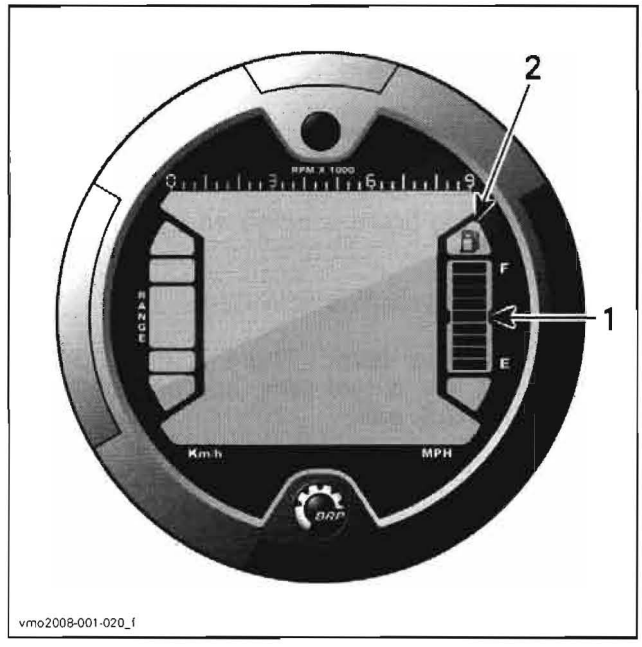

1. *Fuel level display*
2. *Low fuel indicator lamp*

www.midwestmanuals.com
Sales@midwestmanuals.com

www.midwestmanuals.com

Indicator Lamps

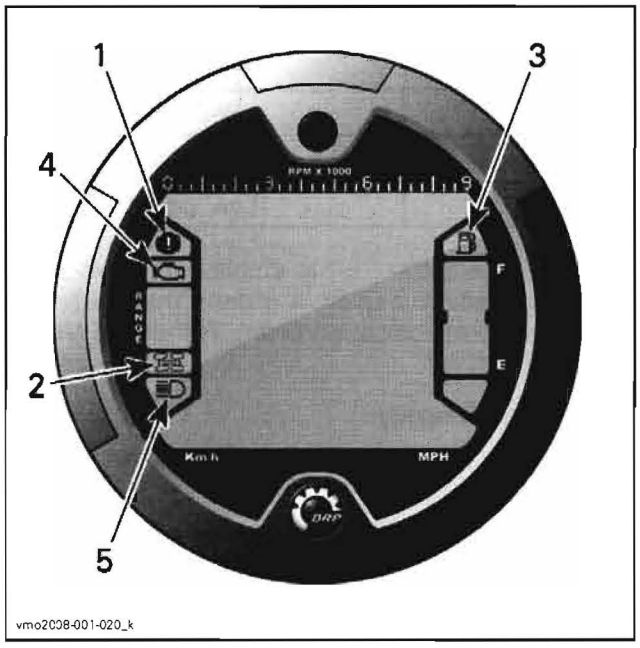

vmo2008-001-020_k

1. *Parking brake indicator lamp*
2. *4WD indicator lamp*
3. *Low fuel level indicator lamp*
4. *Check engine indicator lamp*
5. *High beam indicator lamp*

Parking brake is activated.

4WD system is activated.

Low fuel level. There is only 30% of fuel left in fuel tank, approximately 6 L (1.6 U.S. gal).

Check engine/DESS system operation.

High headlamp beam position selected.

Renegade Models

This vehicle is equipped with an electronic multi-function gauge.

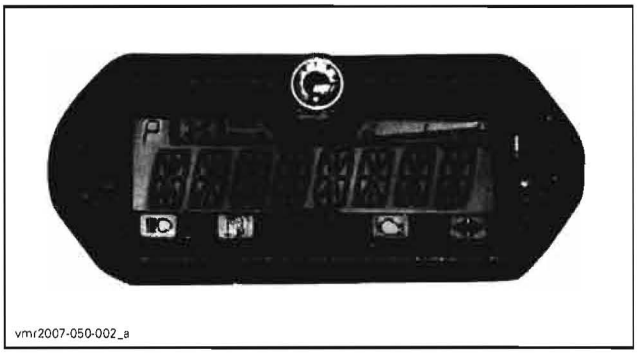

vmr2007-050-002_a

It is backlit every time the ignition switch is turned ON and engine run/stop switch is set to RUN.

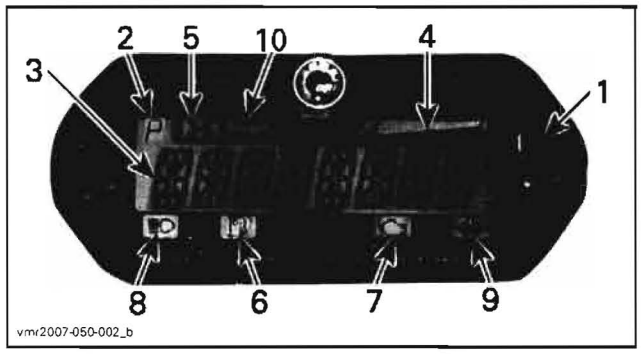

vmr2007-050-002_b

1. *Multifunction display selector button*
2. *Transmission position display*
3. *Multifunction display*
4. *Fuel level display*
5. *4WD indicator lamp*
6. *Low fuel level indicator lamp*
7. *Check engine indicator lamp*
8. *High beam indicator lamp*
9. *Flasher/hazard signal indicator lamp (Europe only)*
10. *MPH, Km/h indicator lamp*

Multifunction Display (Normal Display Mode)

After vehicle startup, the normal display mode shows either:

- vehicle speed
- engine revolution per minute (RPM)
- both parameters simultaneously (combined mode).

Speed Mode: in this mode, the display shows the speed of the vehicle either in km/h or in MPH.



vdd2008-001-084

RPM Mode: in this mode, the display shows the engine RPM.



vdd2008-001-089

Combined Mode: in this mode, the display shows the speed of the vehicle and the engine RPM.

www.midwestmanuals.com
Sales@midwestmanuals.com

www.midwestmanuals.com

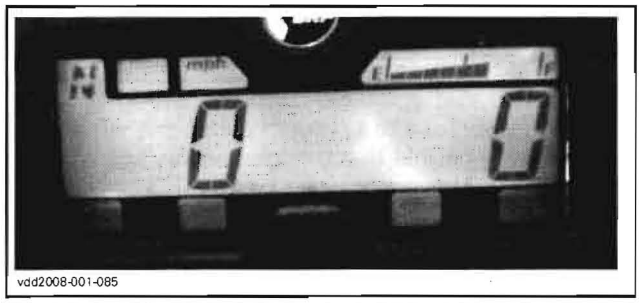

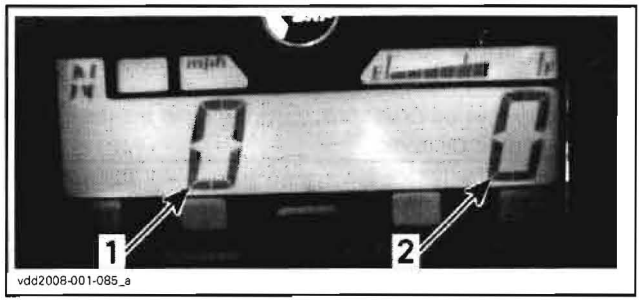

1. Vehicle speed
2. Engine RPM

Mode Selection: to change from one mode to the other, proceed as follows:

1. Turn ignition key to ON. Wait until 'greeting' is finished.
2. Press and release selector button once to display OD (odometer).

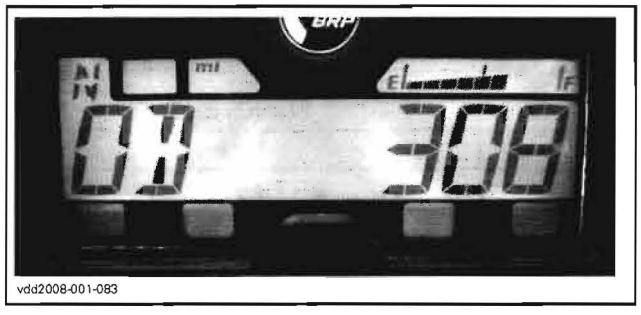

3. Press selector button and HOLD for 2 seconds. This will change the displayed mode to either Speed, RPM or Combined.
4. To select another mode, repeat steps 2 and 3 until you get the mode desired.

Multifunction Display (temporary display mode)

Press and release selector button to change the normal display mode to the following temporary mode:

- odometer
- trip meter (resettable)
- hour meter (resettable)
- vehicle hour meter.

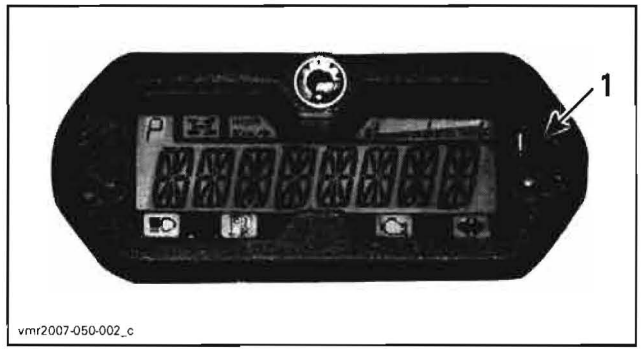

1. Selector button

The gauge will display the selected mode for 10 seconds then will return to the normal display mode.

While in a resettable mode, push and HOLD selector button for 2 seconds to reset it.

Multifunction Display Codes/Messages

Fault Codes:

Fault codes (if so) can be displayed in the gauge. Refer to *ENGINE MANAGEMENT*.

Messages:

The following messages can also be viewed in the multifunction display:

www.midwestmanuals.com
Sales@midwestmanuals.com

www.midwestmanuals.com

MESSAGE	DISPLAY FREQUENCY	CHECK ENGINE LAMP	DESCRIPTION
INVALID KEY	—	—	Indicates that you have used the wrong ignition key, use the proper key for this vehicle. It is also possible that the ignition key has a bad contact, remove and clean key.
BRAKE	—	—	Displayed whenever brake is used more than 15 seconds.
LO BATT	Every 5 seconds	ON	Low battery voltage. Check battery voltage and charging system.
HI BATT	Every 5 seconds	ON	High battery voltage. Check battery voltage and charging system.
LOW OIL (1)	Every 5 seconds	ON	Engine low oil pressure. Stop engine immediately and check oil level.
LOW FUEL	Every 5 seconds	—	Low fuel indicator lamp also turns on. Refer to *INDICATOR LAMPS*.
HI TEMP (2)	Every 5 seconds	ON	Engine is overheating. Refer to *COOLING SYSTEM*.
LIMP HOME	Every 5 seconds	Blinking	Serious fault on the engine that can change the normal operation of the engine. Refer to *ENGINE MANAGEMENT* for more details.
CHECK ENGINE	Every 5 seconds	ON	EMS fault. Refer to *ENGINE MANAGEMENT* for more details.
MAINTENANCE SOON	Every 30 minutes	ON	Periodic maintenance required. **NOTE:** To reset message, use B.U.D.S. software and click **Reset Service** button in **Vehicle** tab.
NO ECM COMMUNICATION	—	—	Communication error between gauge and engine control module (ECM). Refer to *ENGINE MANAGEMENT*.

CAUTION: (1) If the light does not turn off right after engine starting, stop engine. Check engine oil level. Refill if necessary. Do not use the vehicle until repaired.

CAUTION: (2) If the light does not turn off right after engine starting, stop engine. Do not use the vehicle until repaired.

Transmission Position Display

This display will show transmission position.

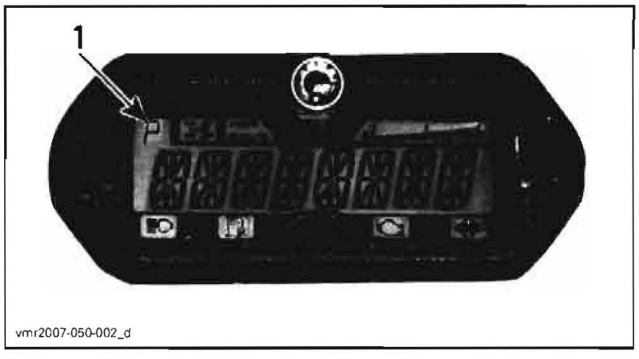

1. Transmission position

DISPLAY	FUNCTION
P	Park
N	Neutral
R	Reverse
H	High gear
L	Low gear

NOTE: If the letter "E" is displayed in the transmission position display, it means that there is a electrical communication error.

Fuel Level Display

Bar gauge continuously indicates the amount of fuel in the fuel tank while riding.

www.midwestmanuals.com
Sales@midwestmanuals.com

www.midwestmanuals.com

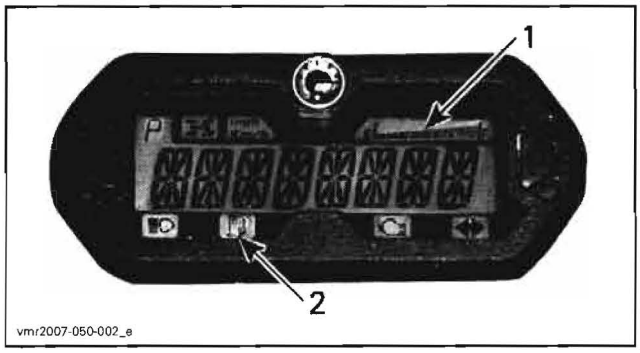

1. *Fuel level display*
2. *Low fuel indicator lamp*

Indicator Lamps

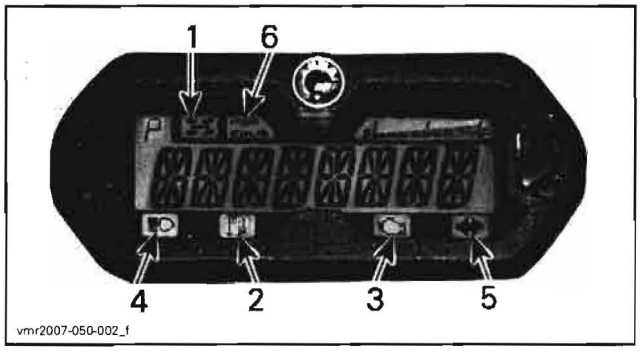

1. *4WD indicator lamp*
2. *Low fuel level indicator lamp*
3. *Check engine indicator lamp*
4. *High beam indicator lamp*
5. *Flasher/Hazard signal indicator lamp (Europe only)*
6. *MPH or km/h indicator lamp*

When this indicator is ON, it indicates the 4WD system is activated.

When this indicator is ON, it indicates that there is only 30% of fuel left in fuel tank, approximately 6 L (1.6 U.S. gal).

When this indicator is ON, it indicates an engine fault code, look for message in multifunction display.
When this indicator blinks, it indicates that the LIMP HOME mode is activated, refer to *TROUBLESHOOTING* for more details.

When this indicator is ON, it indicates high intensity is selected on the headlamps and ignition key is in LIGHTS position.

When this indicator is blinking, it indicates the flasher/hazard is activated (Europe only).

mph ***Km/h*** The proper lamp turns on to indicate the unit the speedometer uses.

Function Display Problems

When the functions do not display, check for fault code(s). Refer to *ENGINE MANAGEMENT* section. When a specific function does not work, proceed as follows.

Fuel Level

As a quick test with B.U.D.S., go in **Activation** tab and activate fuel level display area.

If it does not work, check wiring/connectors and if they are good, try a new multifunction gauge.

If it works, check fuel level sender. Refer to procedure further in this section.

Transmission Position Display

If the letter "E" is displayed in transmission position display, there is an electrical communication error. Refer to *GEARBOX AND 4X4 COUPLING UNIT*.

As a quick test with B.U.D.S., go in **Activation** tab and activate transmission position display area.

If it does not work, try a new multifunction gauge.

If it works, check gearbox switches. Refer to *GEARBOX AND 4X4 COUPLING UNIT*.

2/4WD Pilot Lamp

As a quick test with B.U.D.S., go in **Activation** tab and activate 2/4WD lamp area.

If it does not work, try a new multifunction gauge.

If it works, check gearbox switch. Refer to *GEARBOX AND 4X4 COUPLING UNIT*.

HI Beam Pilot Lamp

As a quick test with B.U.D.S., go in **Activation** tab and activate HI beam lamp area.

If it does not work, try a new multifunction gauge.

If it works, check if headlamp work. If headlamp do not work, refer to *HEADLAMP*. If headlamp work, check wire/connectors between multifunction gauge and low/hi beam switch.

GAUGE CONNECTOR	MULTIFUNCTION SWITCH CONNECTOR (MG2)	RESISTANCE
Pin 5	Pin 5	Close to 0 Ω

www.midwestmanuals.com
Sales@midwestmanuals.com

www.midwestmanuals.com

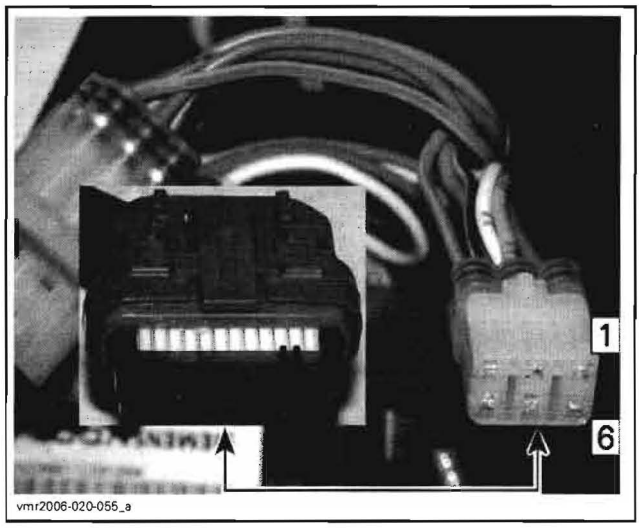

If wire is faulty, replace/repair.

Multifunction Gauge Pinout

FUNCTION	PIN
Power 12 Vdc	17
Ground	20
CAN line	18
CAN line	19
Fuel level gauge supply	4
Fuel level gauge ground	21
2/4WD switch signal	7
HI beam signal	5

Voltage Test

QUICK CHECK	
OBSERVATION	POSSIBLE CAUSE
Multifunction gauge does not turn on	Burnt fuse (F8)
	Faulty relay (main)
	Burnt fuse (F4)
	ECM not powered: – burnt fuse (F6) – defective diode (D1) – defective ECM
	Defective multifunction gauge
	Faulty multifunction switch or key
	Wiring/connectors

Disconnect gauge connector. Turn ignition key ON and set engine run/stop switch to RUN. Read voltage from vehicle harness as follows.

GAUGE CONNECTOR (harness side)		VOLTAGE
Pin 17	Pin 20	Battery voltage

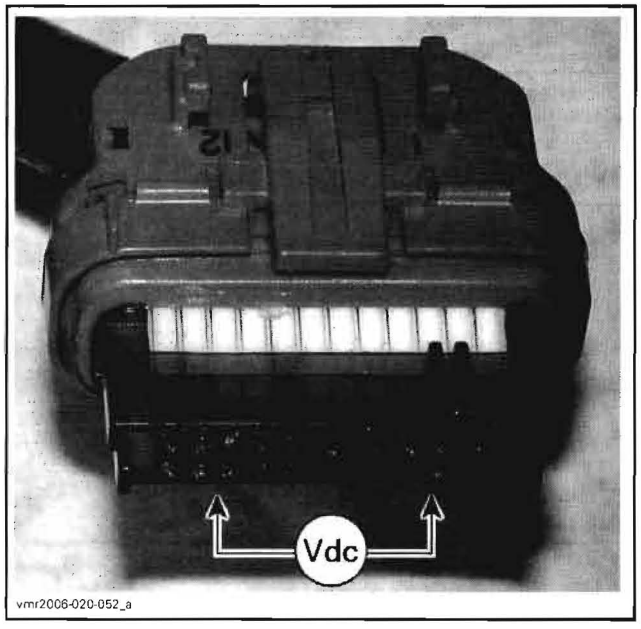

If there is no voltage, recheck voltage as follows.

GAUGE CONNECTOR (harness side)		VOLTAGE
Pin 17	Battery ground	Battery voltage

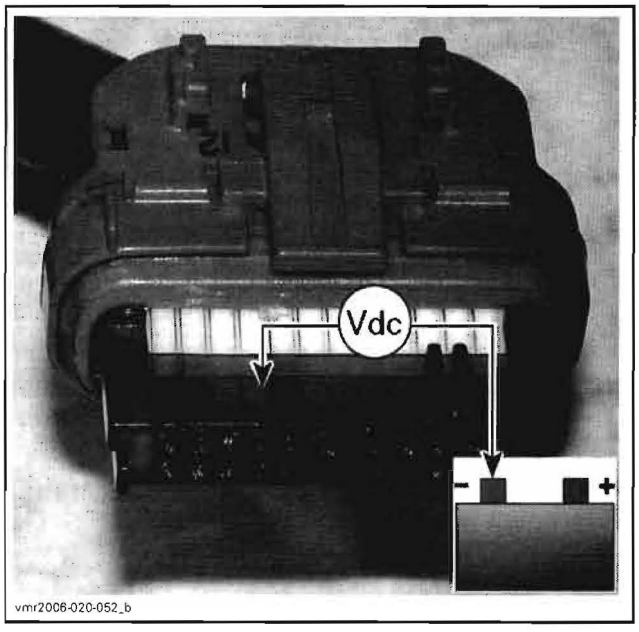

If voltage is not appropriate, check/repair wiring and/or connectors from battery.

www.midwestmanuals.com
Sales@midwestmanuals.com

www.midwestmanuals.com

If battery voltage is good, check ground circuit (pin 20) wiring/connector. If they test good, temporarily connect pin 20 to battery ground. If multifunction gauge turns on, try a new ECM.

When everything else has been tested and multifunction still does not turn on, try a new one.

Multifunction Gauge Removal

Outlander 500/650/800 Series

Remove center panel and dashboard. Refer to *BODY*.

Unplug gauge connector.

Locate locking tab then push edge of dashboard to release tab.



vmr2006-020-056_a

While holding tab, rotate gauge to unlock.

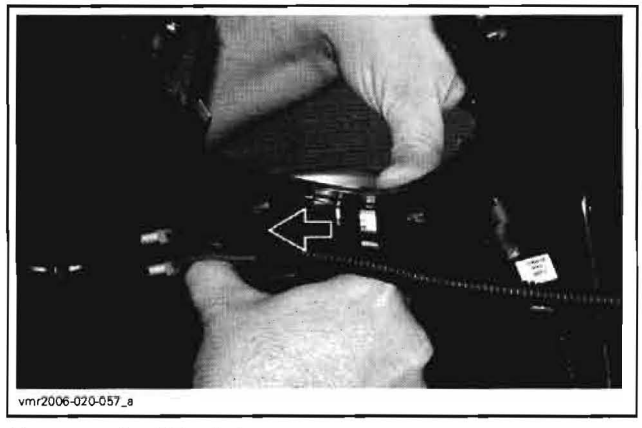
vmr2006-020-057_a

Renegade Models

Remove dashboard. Refer to *BODY*.

Push gauge tabs while pulling it out.

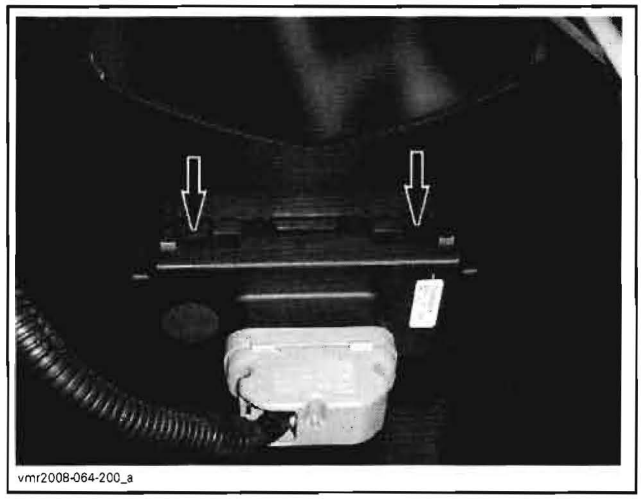
vmr2008-064-200_a

Multifunction Gauge Installation

For the installation, reverse the removal procedure.

New Multifunction Gauge Registration (coding)

Whenever multifunction gauge is replaced, it is required to use B.U.D.S. to register it in ECM. Simply click **Yes** when the following message appears.

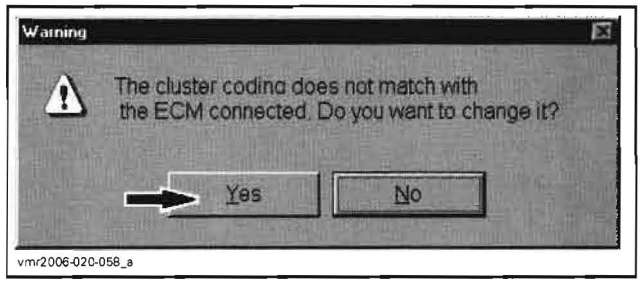

vmr2006-020-058_a

IMPORTANT: If a multifunction gauge from another vehicle model is installed and is not registered in ECM through B.U.D.S., **engine starting will not be allowed until gauge is registered with proper coding.**

Country Selection

Renegade Models

To enable flasher pilot lamp in gauge of European Community (CE) models, use B.U.D.S. software and set cluster country to Renegade CE under **Settings**.

www.midwestmanuals.com
Sales@midwestmanuals.com

www.midwestmanuals.com

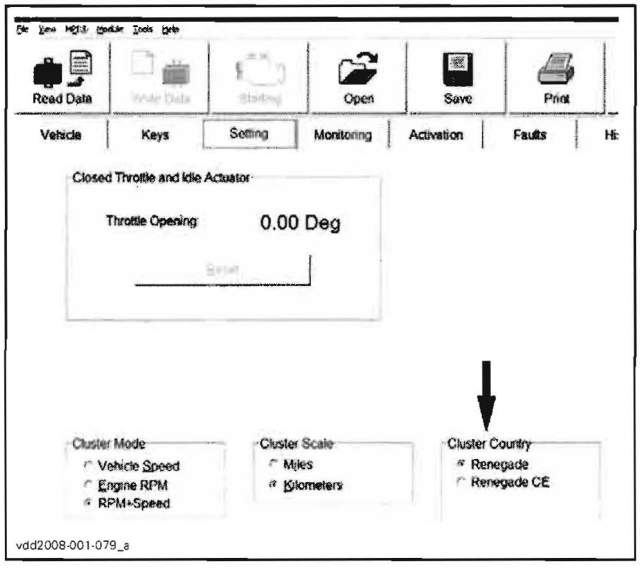

Outside Europe, select Renegade.

VEHICLE SPEED SENSOR (VSS)

Locate VSS connector in gearbox area.

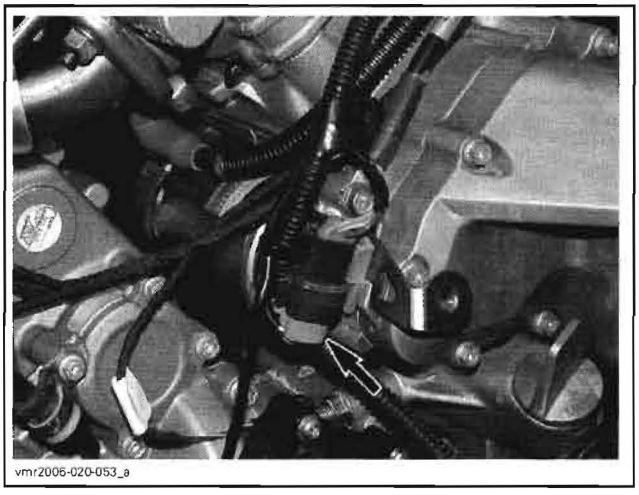

TYPICAL — V810 ENGINE SHOWN

Turn ignition key ON.

Set engine run/stop switch to RUN.

Use a multimeter and set it to Vdc.

Back-probe connector and read voltage as follows.

SPEED SENSOR CONNECTOR (harness side)		VOLTAGE
ORANGE/ GREEN	BROWN/ ORANGE	Battery voltage

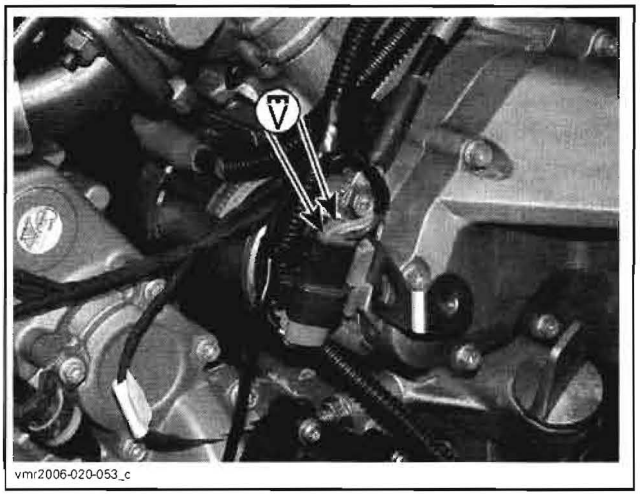

If voltage is not good, check/repair wiring/ connectors.

If voltage is good, do the following test.

Lift rear of vehicle so that rear wheels are off the ground.

Set transmission to 2WD and to Neutral.

Back-probe connector and read voltage while slowly rotating rear wheels with your hands.

SPEED SENSOR CONNECTOR (harness side)		VOLTAGE
ORANGE/ GREEN	PINK	Alternate reading of: battery voltage, approx. 0 Vdc, battery voltage and so on

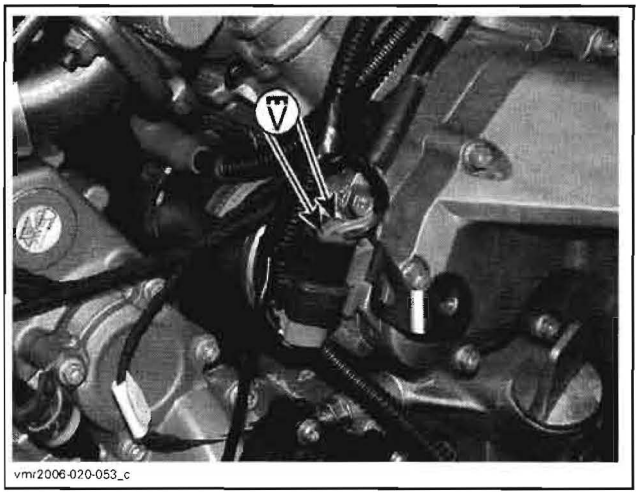

NOTE: Since we measure pulsating voltage, the numeric display will continuously change. The analog display may be easier to follow.

www.midwestmanuals.com
Sales@midwestmanuals.com

www.midwestmanuals.com

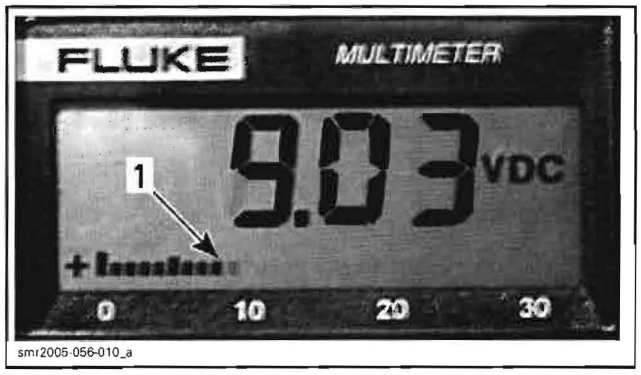

1. Analog display

If voltage is appropriate, check/repair wiring/connector between sensor and ECM. If it is good, try a new ECM.

If voltage is wrong, try a new sensor.

NOTE: Whenever the VSS is found defective, check diode D2. It could be the cause of the VSS failure.

Test diode D2 as explained in *STARTING SYSTEM* section.

FUEL LEVEL SENDER

The fuel level sender is part of the fuel pump module mounted inside the fuel reservoir.

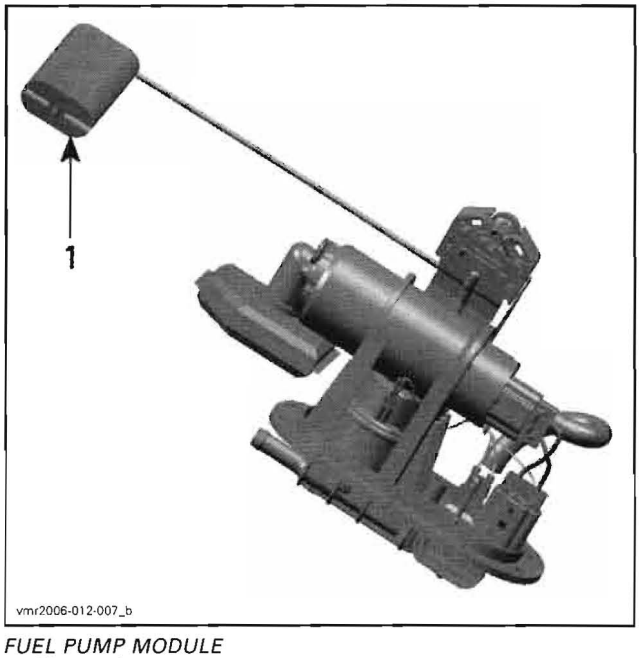

FUEL PUMP MODULE
1. Float and arm

Disconnect multifunction gauge connector.

Measure resistance as per table.

FUEL LEVEL AT GAUGE CONNECTOR		FLOAT POSITION	RESISTANCE MEASUREMENT 20°C (68°F)
Pin 12	Pin 15	Float down (empty)	100 ± 7 Ω
		Float up (full)	5 ± 2 Ω

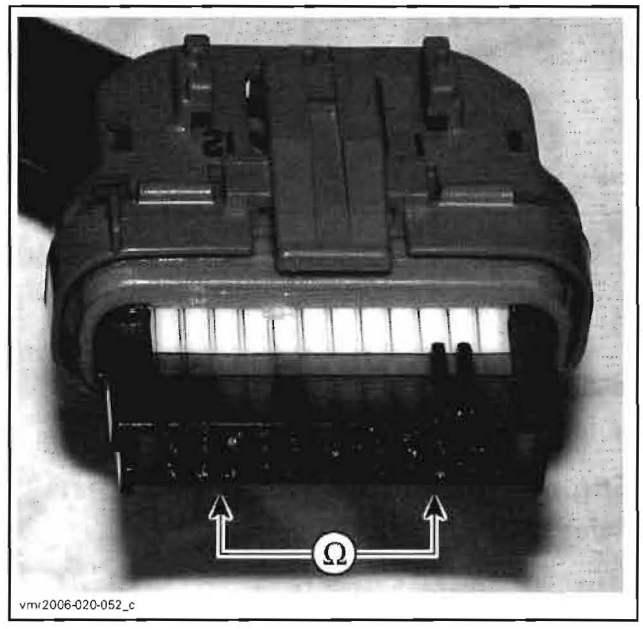

If resistance is not within empty and full values (depending on fuel quantity), check and repair wiring and/or connectors between multifunction gauge and fuel level sender. If they test good, replace fuel pump module. Refer to *FUEL TANK AND FUEL PUMP*.

If fuel level sender and wiring/connectors are good, try a new multifunction gauge.

MULTIFUNCTION SWITCH

Apply parking brake, place transmission lever in NEUTRAL position and start engine.

www.midwestmanuals.com
Sales@midwestmanuals.com

www.midwestmanuals.com



1. *Low/Hi beam switch*
2. *Start switch*
3. *Engine run/stop switch*
4. *Override switch*

Start Switch

Refer to *STARTING SYSTEM.*

Engine Run/Stop Switch

Refer to *IGNITION SYSTEM.*

Low/Hi Beam Switch

Using a multimeter, measure the resistance as follows.

POSITION	MULTIFUNCTION SWITCH CONNECTOR (MG2)		RESISTANCE @ 20°C (68°F)
Switch to LO	Pin 2	Pin 4	0.2 Ω max.
Switch to HI	Pin 5	Pin 4	

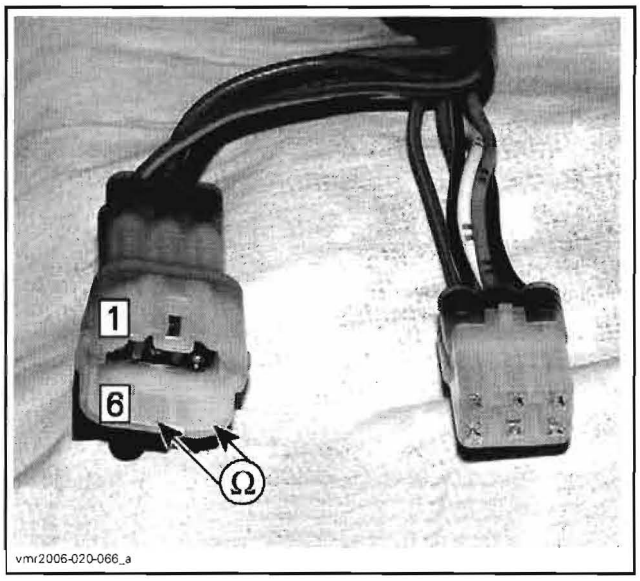

Replace multifunction switch if defective.

Override Switch

Using a multimeter, measure the resistance between the following wires.

SWITCH POSITION	MULTIFUNCTION SWITCH CONNECTOR (MG1)		RESISTANCE @ 20°C (68°F)
Released	Pin 5	Pin 6	0.2 Ω max.
Pushed			Open (0L)

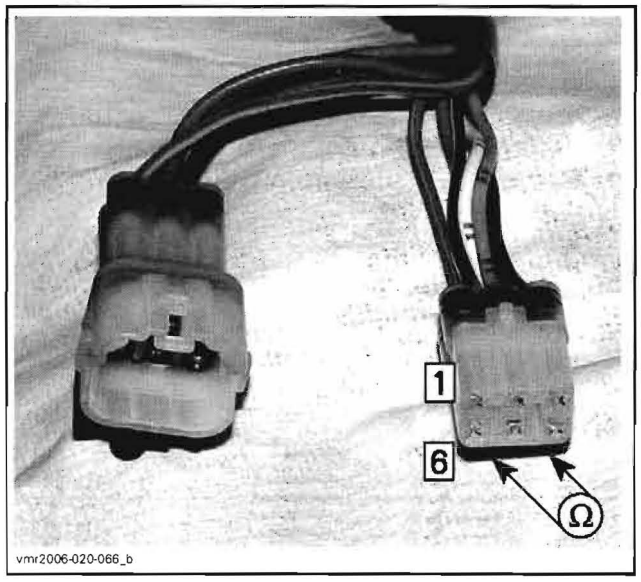

Replace multifunction switch if defective.

www.midwestmanuals.com
Sales@midwestmanuals.com

www.midwestmanuals.com

12-VOLT AUXILIARY POWER OUTLET

The 12-volt auxiliary power outlet allows the installation of additional accessories.

12-Volt Auxiliary Power Outlet Test

Remove center panel and dashboard. Refer to *BODY*.

Turn ignition key on and set engine run/stop switch to RUN.

Unplug power outlet connector.

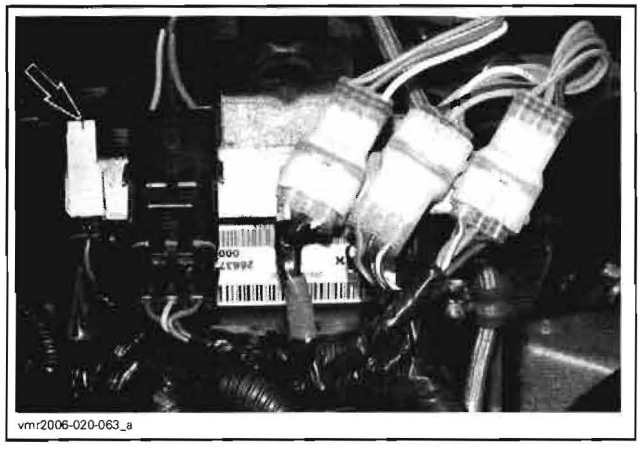
vmr2006-020-063_a

Using a multimeter, measure the voltage as follows.

WIRE COLOR		VOLTAGE
RED/BLACK	BLACK	12 - 14.5 Vdc

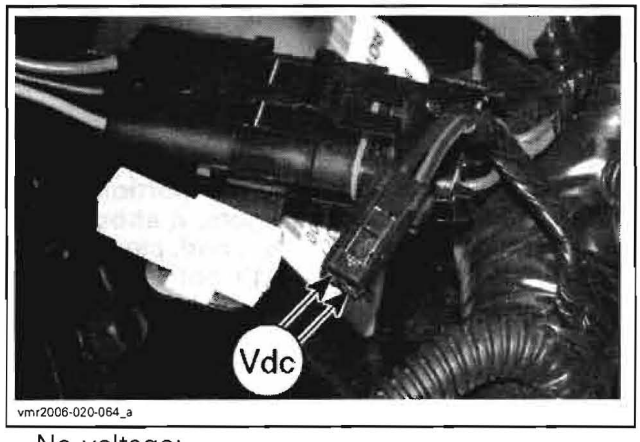

vmr2006-020-064_a

– No voltage:
  - Check fuses F4, F7, relay R3 (accessories) and wiring condition.
– Voltage is good:
  - Check accessories.

12-VOLT POWER OUTLET

12-Volt Power Outlet Removal

Remove console. Refer to *BODY*.

Unplug the connectors of the power outlet.

Unscrew the retaining nut.

12-Volt Power Outlet Installation

Reverse the removal procedure.

12-Volt Power Outlet Test

Remove center panel and dashboard. Refer to *BODY*.

Turn ignition key on and set engine run/stop switch to RUN.

Unplug the power outlet connectors.

Using a multimeter, measure the voltage as follows.

WIRE COLOR		VOLTAGE
RED/BLACK	BLACK	12 - 14.5 Vdc

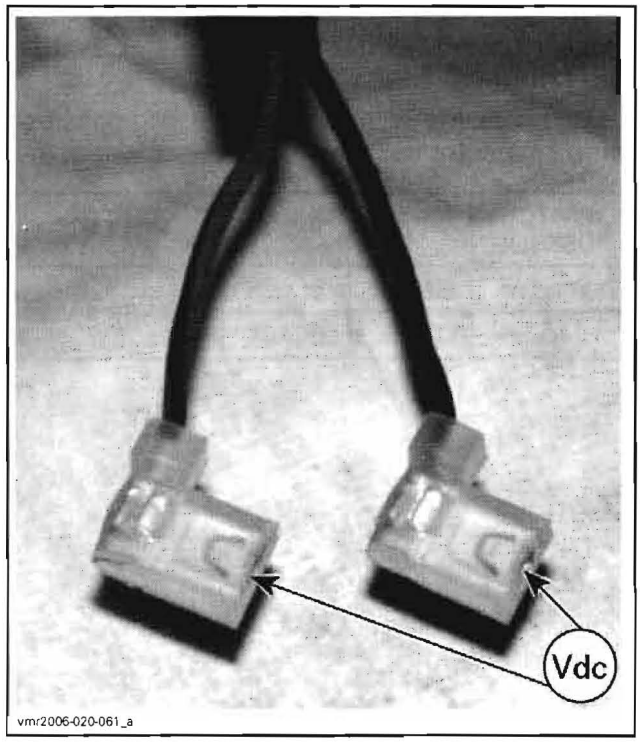

vmr2006-020-061_a

Ensure to reconnect RED/BLACK wire to positive terminal.

www.midwestmanuals.com
Sales@midwestmanuals.com

www.midwestmanuals.com

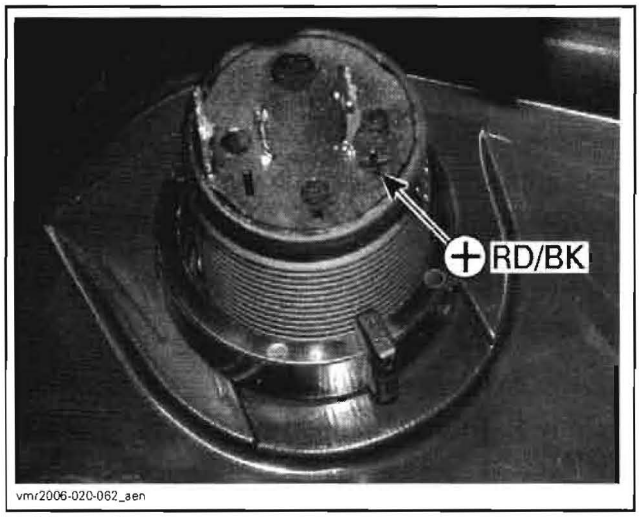

- No voltage:
  - Check fuses F4, F7, relay R3 (accessories) and wiring condition.
- Voltage is good:
  - Change power outlet.

HEADLAMP

Headlamp Test

Disconnect headlamp connector. Refer to *BULB REPLACEMENT*.

Using a multimeter, measure the voltage on headlamp connector as follows.

SWITCH POSITION	WIRE COLOR		VOLTAGE
LO beam	GREEN	BLACK	12 - 14.5 Vdc
HI beam	BLUE	BLACK	

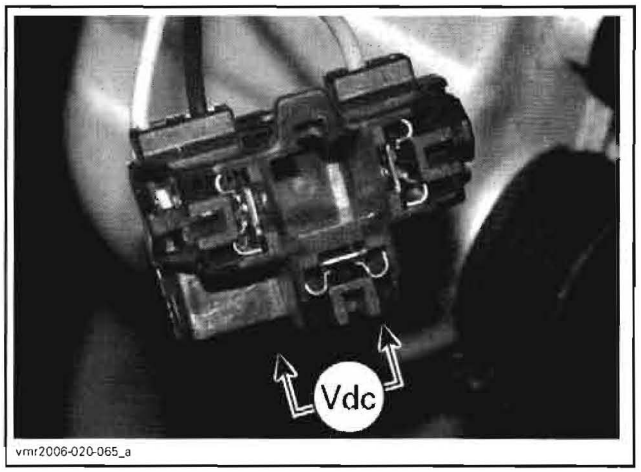

TYPICAL

- Voltage is good:
  - Change headlamp bulb(s).
- No voltage:
  - Check fuses F4, F7, relay R3 (accessories) and wiring condition.
  - Check ignition switch as follows.

SWITCH POSITION	PIN		RESISTANCE @ 20°C (68°F)
OFF	A	F	Infinite (0L)
ON with lights			1 Ω max.
ON without lights			Infinite (0L)

  - Check low/hi beam switch. refer to *MULTI-FUNCTION SWITCH* elsewhere in this section.

Bulb Replacement

CAUTION: Never touch glass portion of an halogen bulb with bare fingers, it shortens its operating life. If glass is touched, clean it with isopropyl alcohol which will not leave a film on the bulb.

All Models except Renegade

Remove cover screws.

www.midwestmanuals.com
Sales@midwestmanuals.com

www.midwestmanuals.com

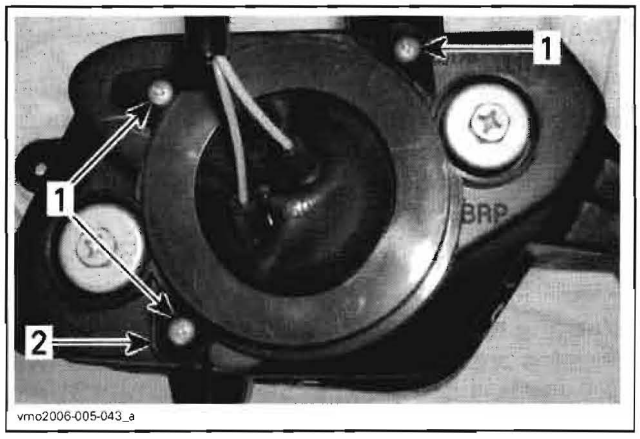

1. *Screws*
2. *Cover*

Remove rubber protector over headlamp housing.

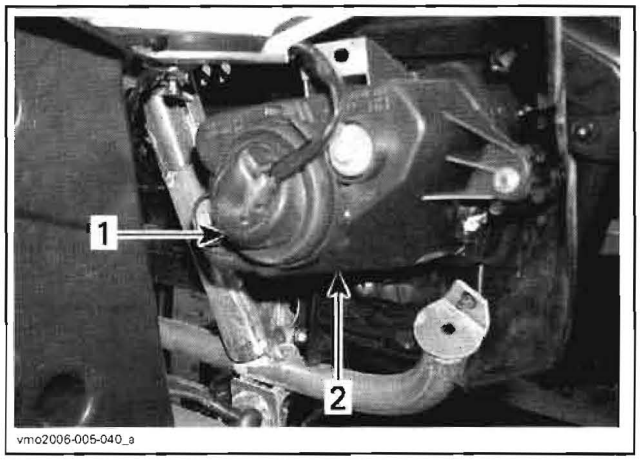

1. *Rubber protector*
2. *Headlamp housing*

Unplug connector from headlamp.

NOTE: Use small locking tab to unlock connector then pull on connector.

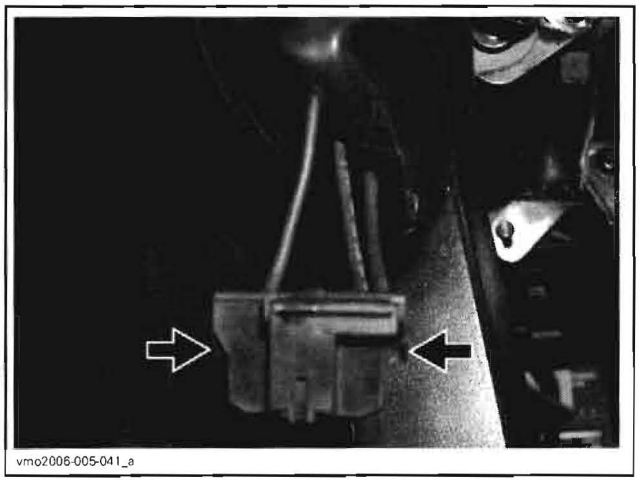

PUSH ON LOCKING TAB TO UNLOCK CONNECTOR

Press the spindle then push it on the side to unlock headlamp bulb.

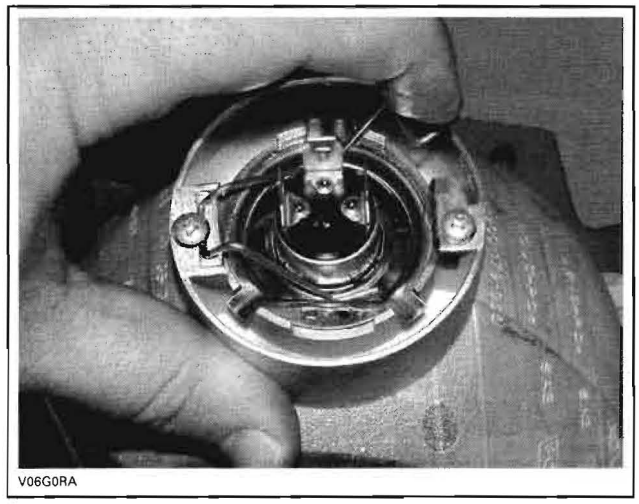

TYPICAL

Lift and hold the spindle then remove the bulb.

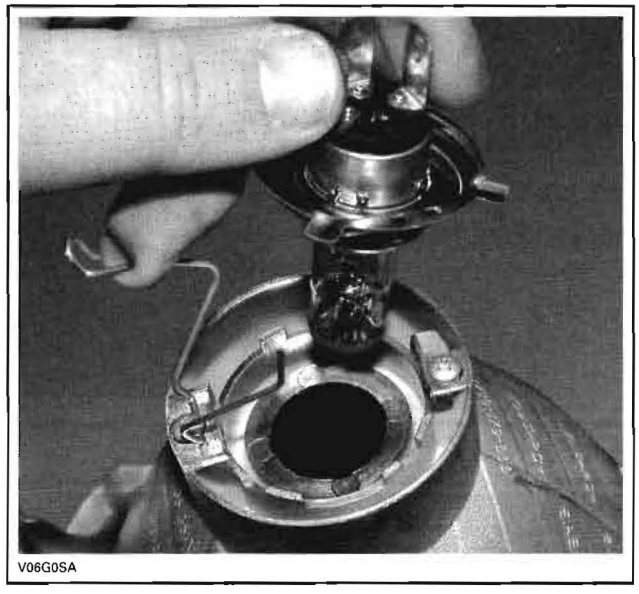

TYPICAL

Properly reinstall removed parts in the reverse order of their removal.

Validate headlamp operation.

Renegade Models

NOTE: The same headlamp is used on both sides of vehicle and for LO and HI beams.

Unplug connector from bulb.

www.midwestmanuals.com
Sales@midwestmanuals.com

www.midwestmanuals.com

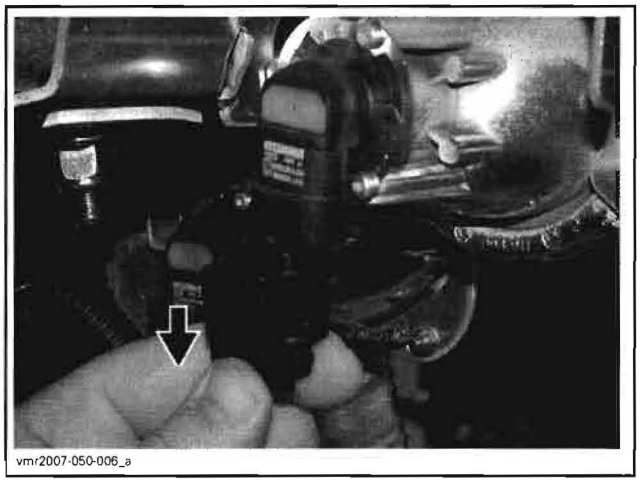
vmr2007-050-006_a

Rotate bulb.

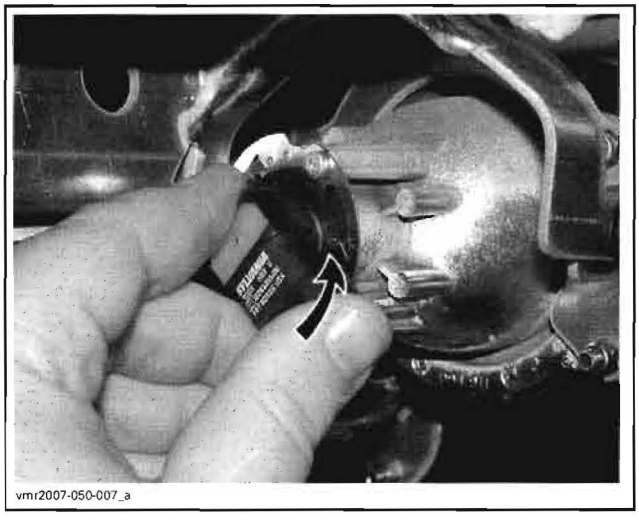
vmr2007-050-007_a

Pull out bulb.

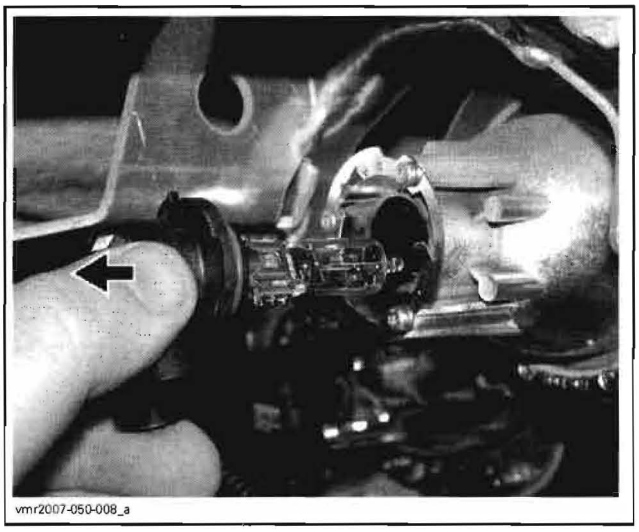
vmr2007-050-008_a

Properly reinstall removed parts in the reverse order of their removal.

Validate headlamp operation.

Headlamp Beam Aiming

Select high intensity.

Beam aiming is correct when center of high beam is 131 mm (5 in) below the headlamp horizontal center line, scribed on a test surface, 5 m (17 ft) away.

NOTE: Sit down the driver or place the same weight on the vehicle.

Measure headlamp center distance from ground. Scribe a line at this height on test surface (wall or screen). Light beam center should be 131 mm (5 in) below scribed line.

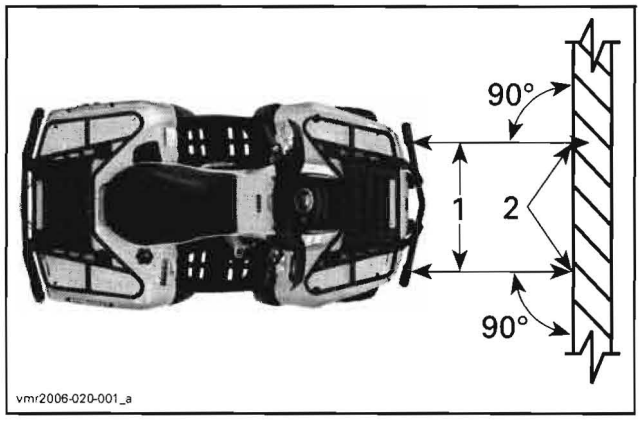

vmr2006-020-001_a

1. Headlamp center lines
2. Light beam center

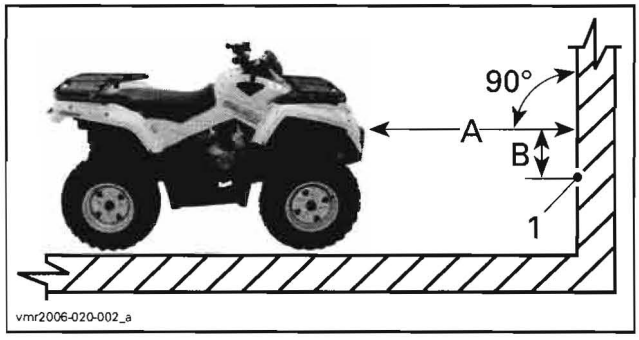

vmr2006-020-002_a

1. Light beam center
A. 5 m (17 ft)
B. 131 mm (5 in)

Adjustment

Turn adjustment screws to adjust beam height and side orientation as described below. Adjust both headlamps evenly.

www.midwestmanuals.com
Sales@midwestmanuals.com

www.midwestmanuals.com

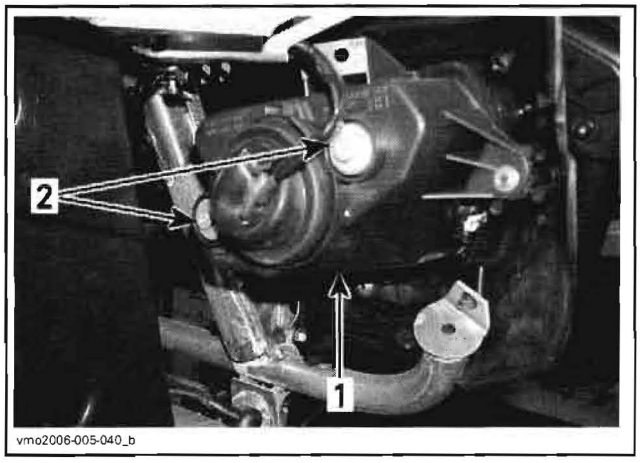

TYPICAL
1. *Headlamp cover*
2. *Adjustment screws*

TAILLIGHT

Bulb Replacement

Unscrew lens screws to expose bulb.

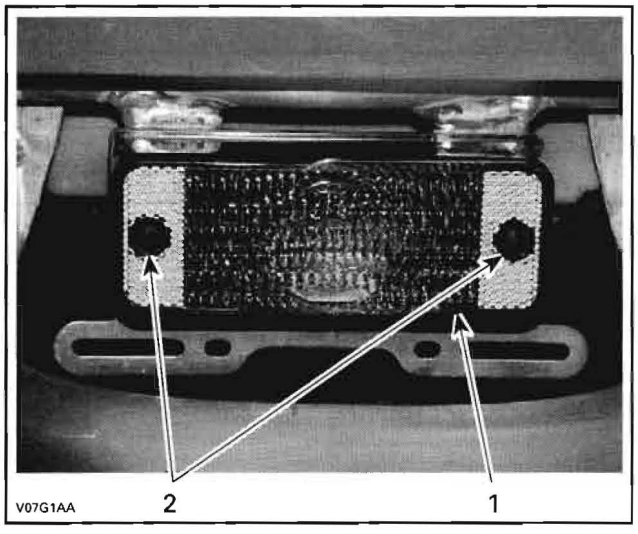

TYPICAL
1. *Lens*
2. *Screws*

Push bulb in and hold while turning courterclockwise to release.

Install the new bulb by first pushing in while turning clockwise.

WINCH

XT Models Only

Winch Test

Winch Motor

Using boosting cables, connect battery power to IN post of winch then to OUT post.

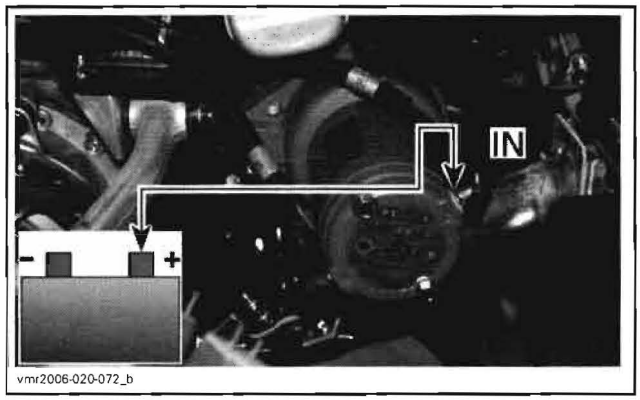

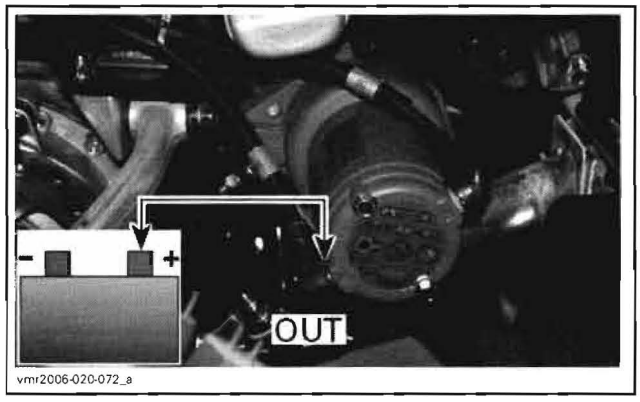

If motor does not turn in any test, replace motor. If it works, continue testing.

Voltage Supply to Switch

Remove center panel and dashboard. Refer to *BODY*.

Disconnect the winch control switch connector.

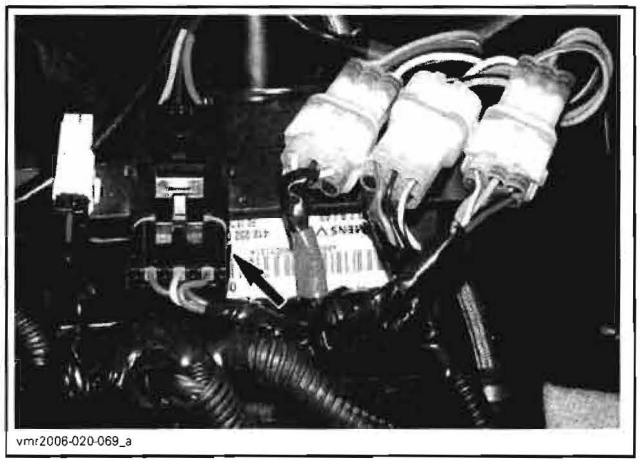

Using a multimeter, measure the resistance as follows.

www.midwestmanuals.com
Sales@midwestmanuals.com

www.midwestmanuals.com

WINCH SWITCH CONNECTOR (harness side)		VOLTAGE
Pin A	Battery ground	12 Vdc

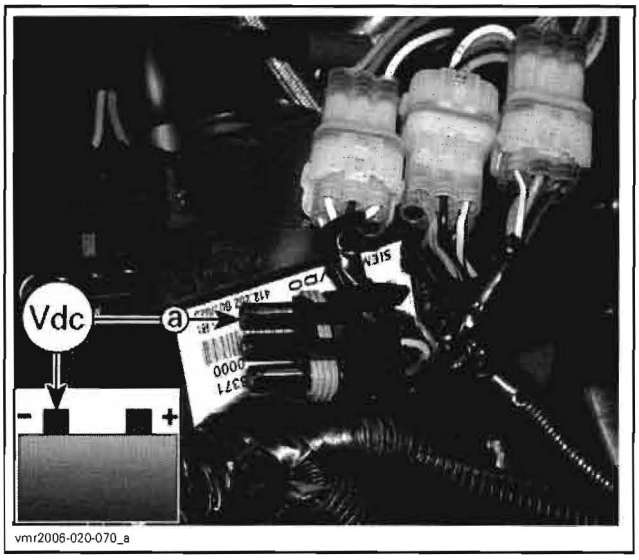

vmr2006-020-070_a

If there is no voltage, check fuses F9, F7, relay R3 (accessories) and wiring condition.

If there is voltage, test switch as follows.

Winch Control Switch

Disconnect terminals at winch relay.

POSITION	TERMINAL	VOLTAGE
Switch pressed to IN and held	LIGHT/BLUE and battery ground	12 Vdc

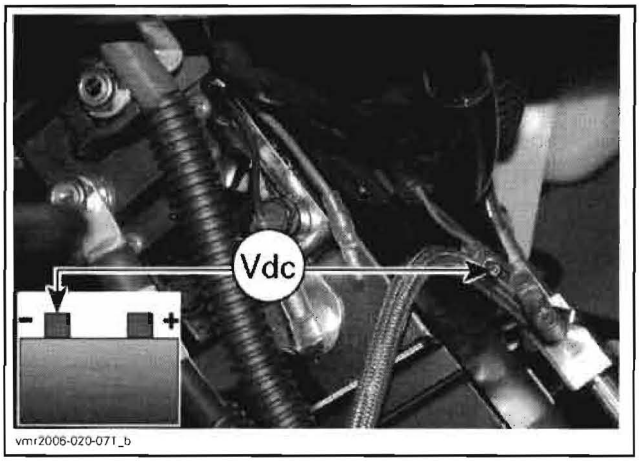

vmr2006-020-071_b

POSITION	TERMINAL	VOLTAGE
Switch pressed to OUT and held	GREEN/BLUE and battery ground	12 Vdc

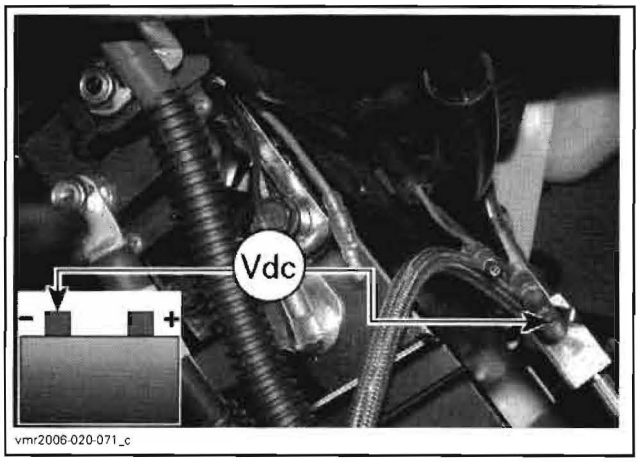

vmr2006-020-071_c

If there is no voltage in either test, check wiring/connectors. If they are good, replace winch switch.

If there is voltage, test winch relay as follows.

Winch Relay

Reconnect terminals at winch relay.

Measure voltage drop between relay and motor as follows.

POSITION	RELAY TERMINAL	VOLTAGE DROP
Switch pressed to IN and held	Battery post and IN cable	0.2 Vdc max.

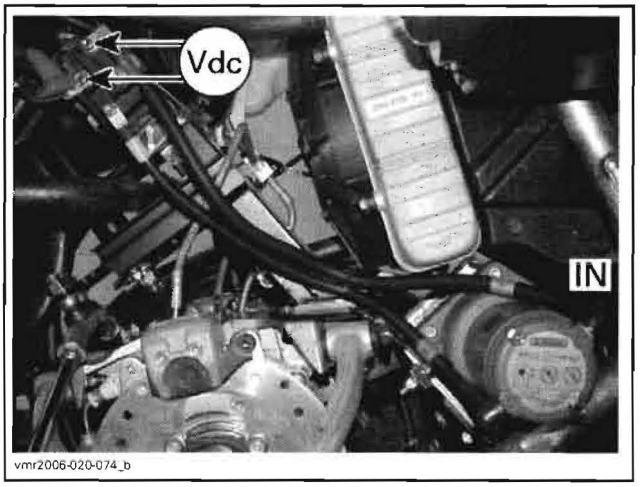

vmr2006-020-074_b

POSITION	RELAY TERMINAL	VOLTAGE DROP
Switch pressed to OUT and held	Battery post and OUT cable	0.2 Vdc max.

www.midwestmanuals.com
Sales@midwestmanuals.com

www.midwestmanuals.com

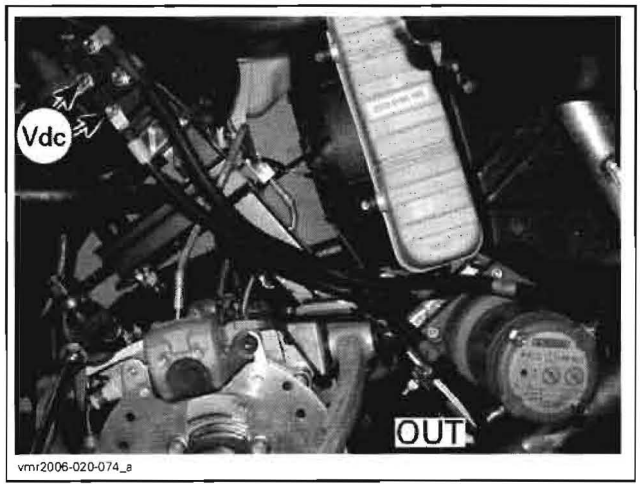

If voltage drop read is higher than specification in either test, check wiring/connectors. If they are good, replace winch relay.

If voltage read is battery voltage, the relay does not close. Replace with a new one.

Winch Removal

Disconnect, the battery BLACK (-) cable first, then the RED (+) cable.

⚠ WARNING

Always respect this order for disassembly; disconnect BLACK (-) cable first. Electrolyte or fuel vapors can be present in engine compartment and a spark may ignite them and possibly cause personal injuries.

Disconnect the winch power cables.

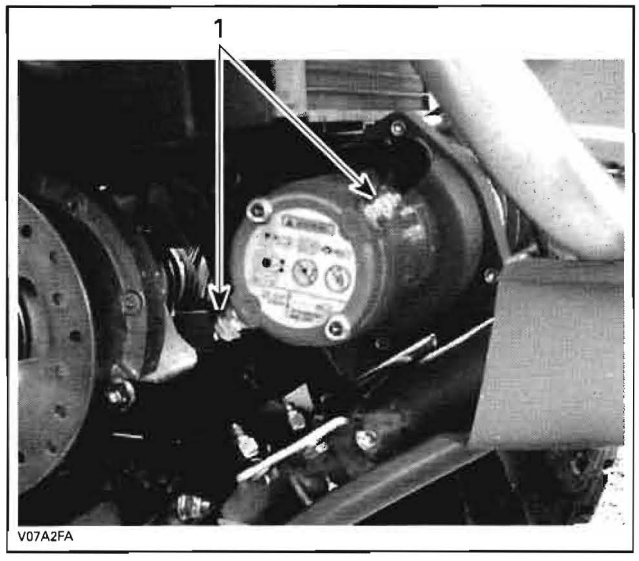

1. Power connections

NOTE: Note the position of the power cables for reinstallation.

Remove:
- locking pin

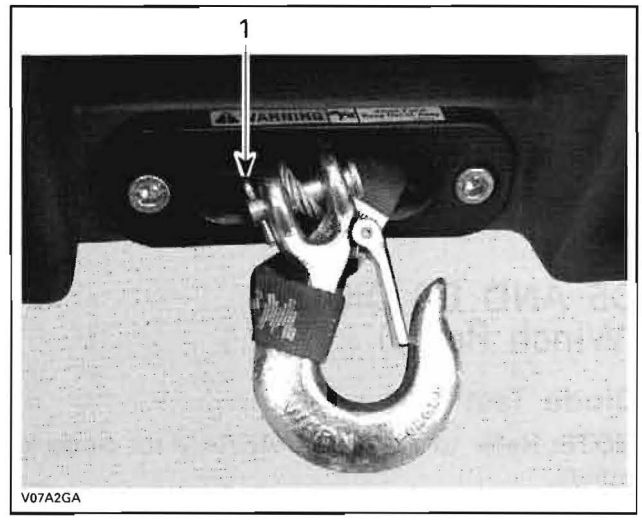

1. Locking pin

- hook
- bolts retaining the winch from both LH and RH sides.

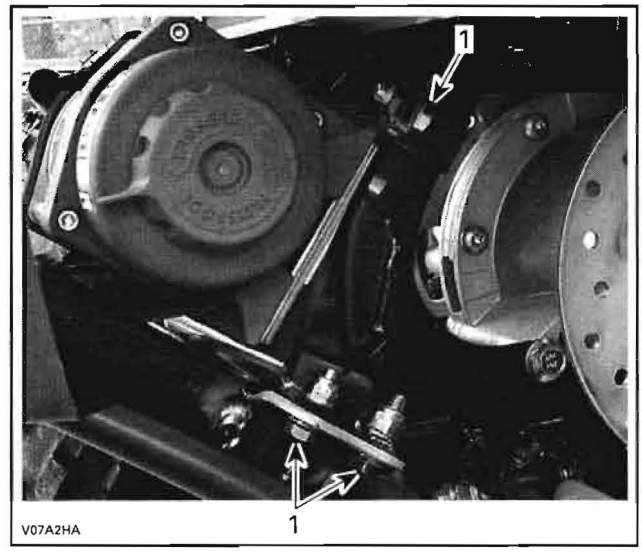

1. Bolts to be removed

Remove winch.

Winch Installation

For the installation, reverse the removal procedure.

WINCH CONTROL SWITCH

Winch Control Switch Test

Refer to *WINCH* above.

www.midwestmanuals.com
Sales@midwestmanuals.com

www.midwestmanuals.com

Winch Control Switch Removal

Remove screws retaining winch control switch to handlebar.

Remove steering cover, refer to *BODY*.

Disconnect the winch control switch connector.

Winch Control Switch Installation

For the installation, reverse the removal procedure.

D5 AND D6 DIODES (Winch Relay)

Diode Test

NOTE: Refer to *WIRING DIAGRAM* for diode location.

Remove center panel and dashboard. Refer to *BODY*.

Disconnect winch switch connector.

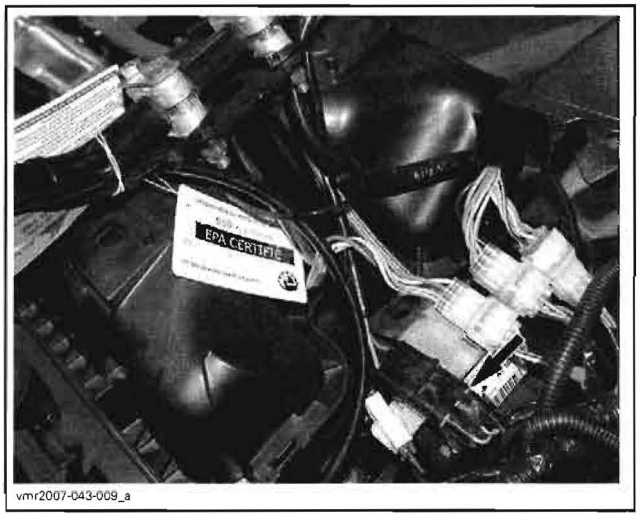

vmr2007-043-009_a

Disconnect appropriate wire going to winch relay (behind RH front wheel). Refer to table.

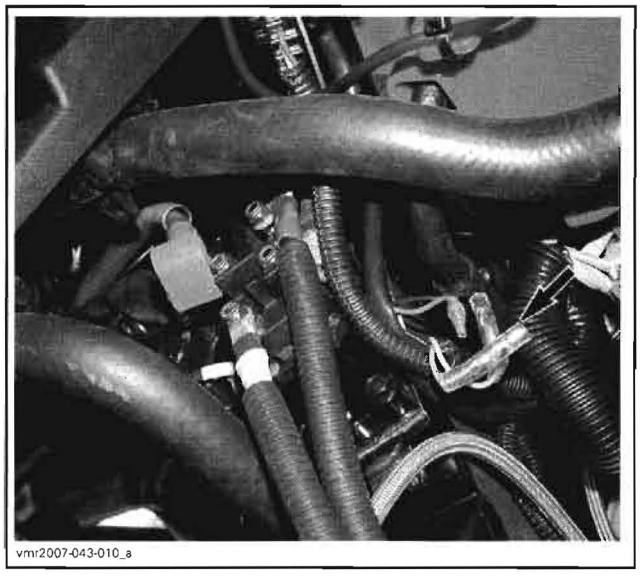
vmr2007-043-010_a

DIODE	WIRE TO DISCONNECT AT WINCH RELAY	**WIRES TO PROBE (harness side)**	
		WINCH SWITCH CONNECTOR	WINCH RELAY POST
D5	GREEN/BLUE (green on relay)	GREEN/BLUE	Ground
D6	LIGHT BLUE (black on relay)	LIGHT BLUE	

Probe diode wires paying attention to proper polarity. See illustrations.

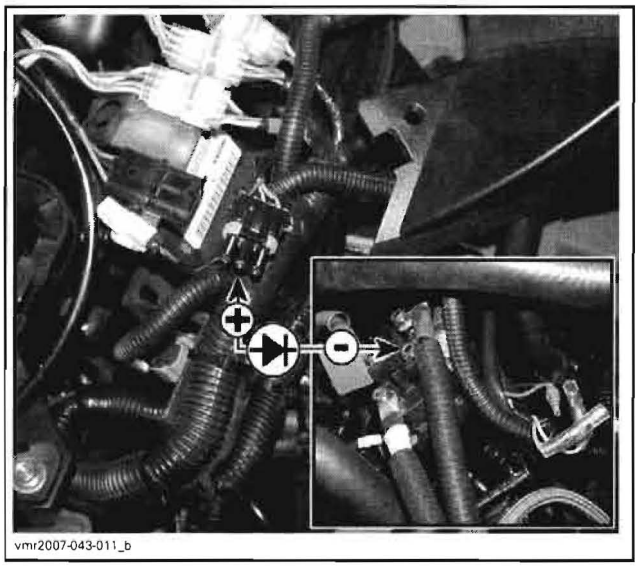
vmr2007-043-011_b

MUST BE OPEN CIRCUIT

www.midwestmanuals.com
Sales@midwestmanuals.com

www.midwestmanuals.com

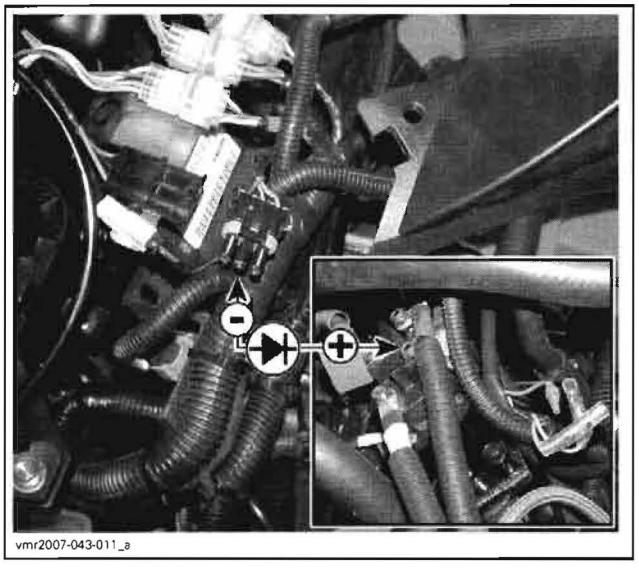

MUST BE AROUND 0.5 V

If any diode test fail, replace diode.

NOTE: Diodes are located in wiring harness approximately where shown.

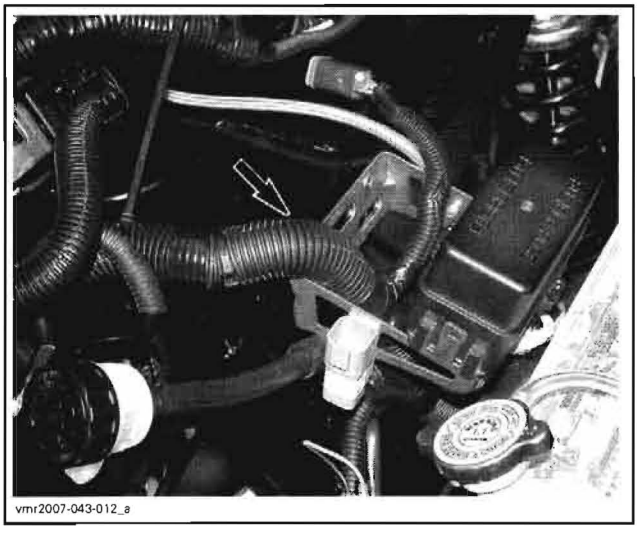

Properly reinstall removed parts.

www.midwestmanuals.com
Sales@midwestmanuals.com



sales@midwestmanuals.com
www.midwestmanuals.com

www.midwestmanuals.com

CONTINUOUSLY VARIABLE TRANSMISSION (CVT)

SERVICE TOOLS

Description	Part Number	Page
pulley holding tool	529 006 400	293
drive pulley puller	529 035 746	293
driven pulley expander	529 035 747	291
pulley holding tool	529 035 771	300

SERVICE PRODUCTS

Description	Part Number	Page
Isoflex grease Topas NB 52	293 550 021	298–299
pulley flange cleaner	413 711 809	295, 301

www.midwestmanuals.com
Sales@midwestmanuals.com

www.midwestmanuals.com

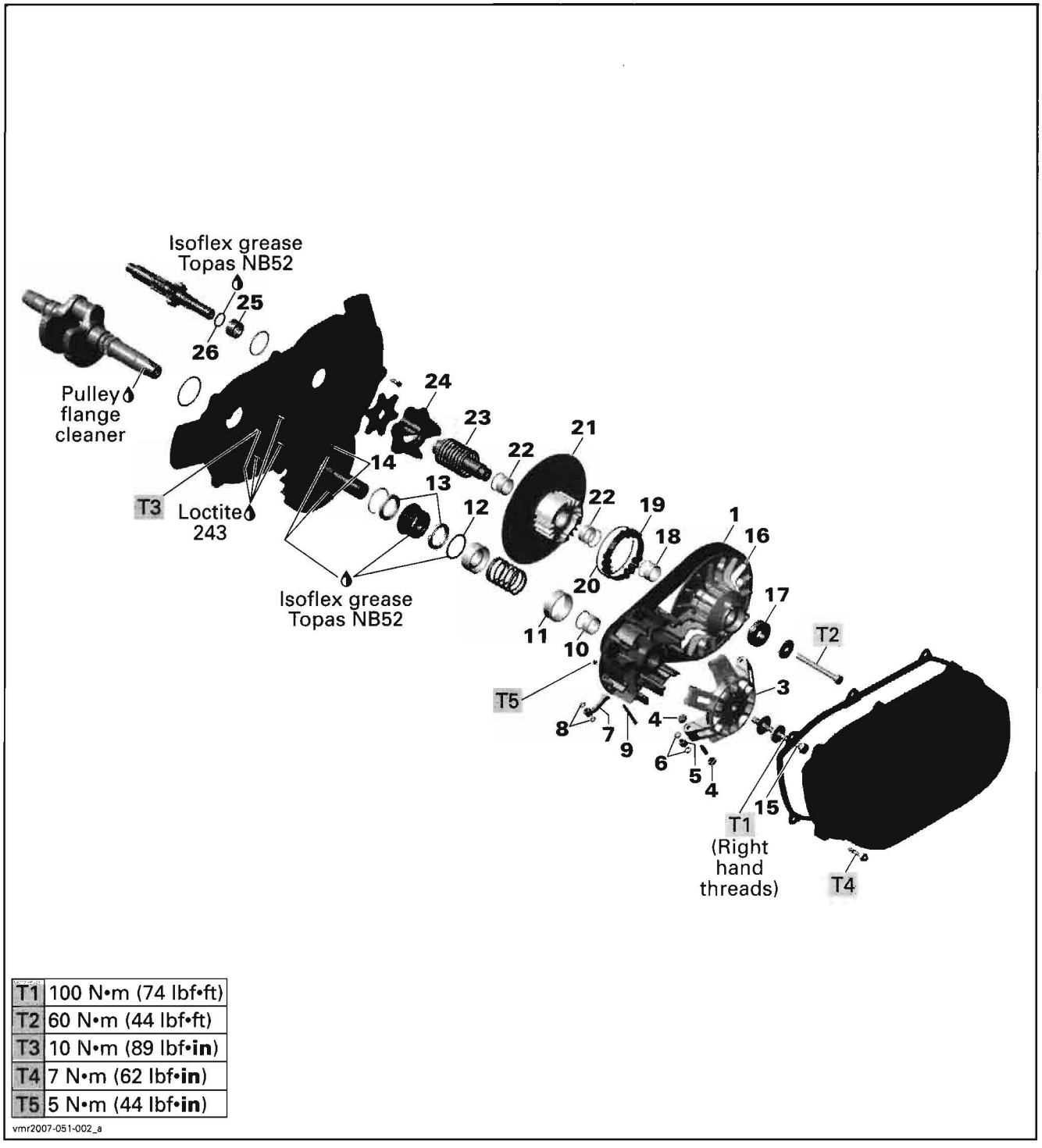

T1	100 N•m (74 lbf•ft)
T2	60 N•m (44 lbf•ft)
T3	10 N•m (89 lbf•**in**)
T4	7 N•m (62 lbf•**in**)
T5	5 N•m (44 lbf•**in**)

vmr2007-051-002_a

www.midwestmanuals.com
Sales@midwestmanuals.com

www.midwestmanuals.com

GENERAL

NOTE: For a better understanding, the following illustrations are taken with engine out of vehicle. To perform the following instructions, it is not necessary to remove engine.

This CVT is lubrication free. Never lubricate any components except drive pulley one-way clutch and friction washer.

During assembly/installation, use the torque values and service products as in the exploded views.

Clean threads before applying a threadlocker. Refer to *SELF-LOCKING FASTENERS* and *LOCTITE APPLICATION* at the beginning of this manual for complete procedure.

⚠ WARNING

Torque wrench tightening specifications must strictly be adhered to.
Locking devices (e.g.: locking tabs, elastic stop nuts, cotter pin, etc.) must be replaced with new ones.

⚠ WARNING

Never touch CVT while engine is running. Never drive vehicle when CVT cover is removed.

⚠ WARNING

Any drive pulley repairs must be performed by an authorized Can-Am dealer. Subcomponent installation and assembly tolerances require strict adherence to procedures detailed.

CAUTION: Never use any type of impact wrench at drive pulley removal and installation.

⚠ WARNING

The clutch assembly is a precisely balanced unit. Never replace parts with used parts from another clutch assembly.

CAUTION: These pulleys have metric threads. Do not use SAE threads puller. Always tighten puller by hand to ensure that the drive pulley has the same type of threads (metric vs SAE) prior to fully tightening.

PROCEDURES

DRIVE BELT

Removal

Remove CVT cover screws.

NOTE: Remove the center top screw last. This screw allows to support the cover during removal.

Remove the CVT cover and its gasket.

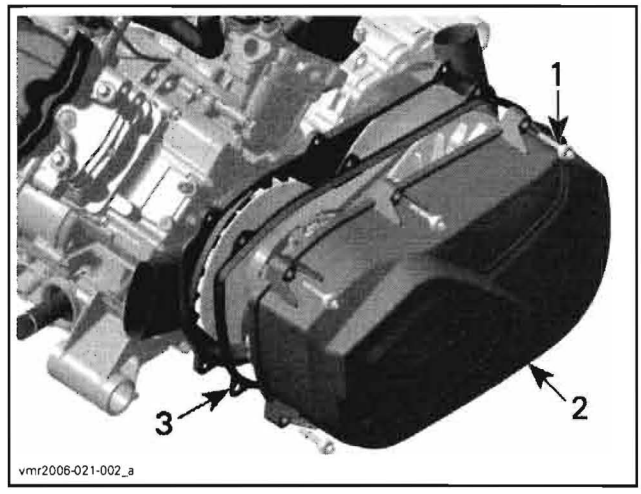

1. CVT cover screw
2. CVT cover
3. Gasket

Open driven pulley with the driven pulley expander (P/N 529 035 747).

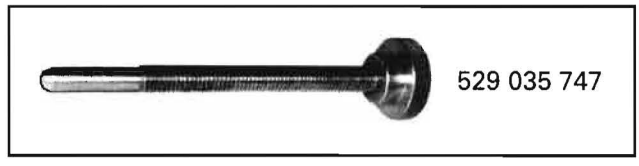

Screw tool in the threaded hole of driven pulley and tighten to open the pulley.

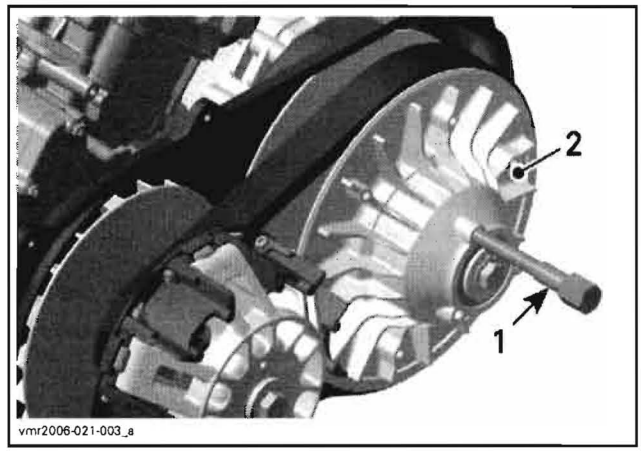

1. Driven pulley expander
2. Fixed sheave of driven pulley

www.midwestmanuals.com
Sales@midwestmanuals.com

www.midwestmanuals.com

To remove belt, slip the belt over the top edge of fixed sheave, as shown.

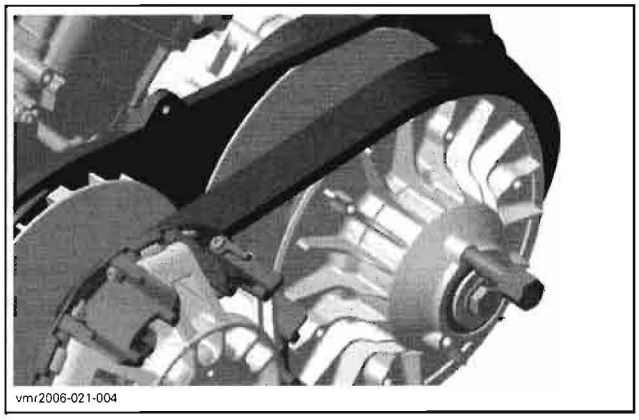
vmr2006-021-004

Inspection

Inspect belt for cracks, fraying or abnormal wear. Replace if necessary.

Check drive belt width at cord level. Replace if it is out of specification (see table below).

DRIVE BELT WIDTH	
SERVICE LIMIT	30.00 mm (1.181 in)

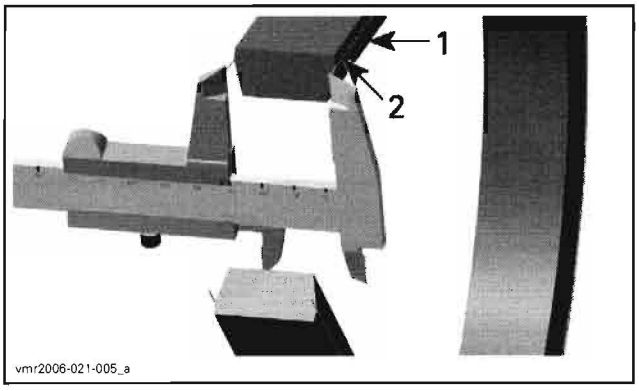

vmr2006-021-005_a

1. *Drive belt*
2. *Cord in drive belt*

Installation

For installation, reverse the removal procedure. Pay attention to following details.

The maximum drive belt life span is obtained when the drive belt has the proper rotation direction. Install it so that the arrow printed on belt is pointing towards front of the vehicle, viewed from top.

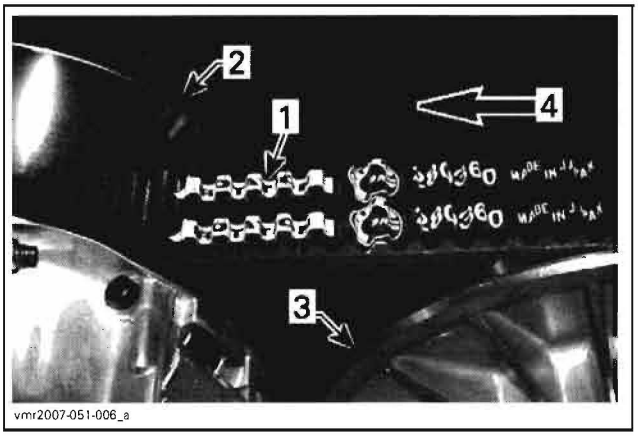

vmr2007-051-006_a

1. *Arrow printed on belt*
2. *Drive pulley (front)*
3. *Driven pulley (rear)*
4. *Rotation direction*

Install the center top screw of cover in first.

Tighten the CVT cover screws as per following sequence.

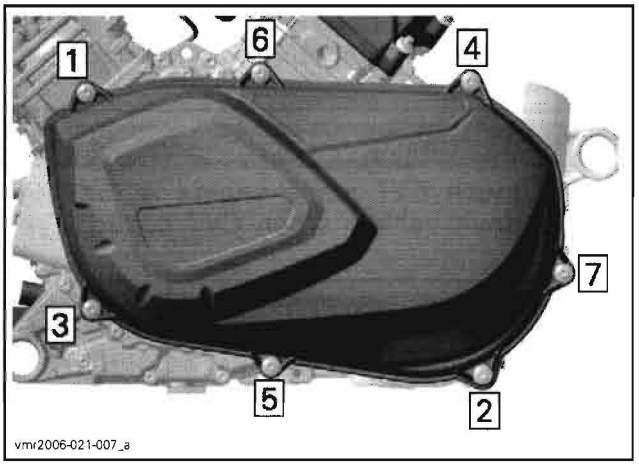

vmr2006-021-007_a

DRIVE PULLEY

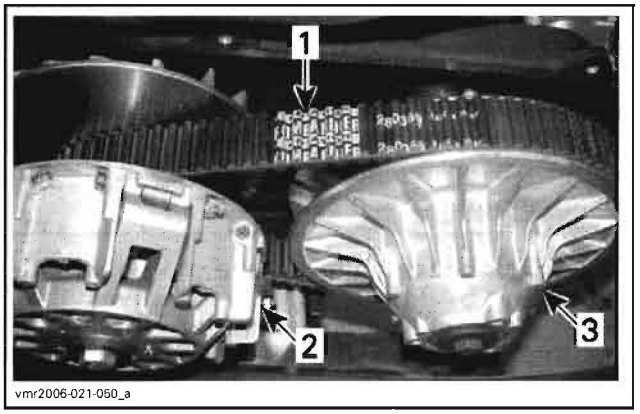

vmr2006-021-050_a

1. *Belt*
2. *Drive pulley*
3. *Driven pulley*

www.midwestmanuals.com
Sales@midwestmanuals.com

www.midwestmanuals.com

Removal

Remove belt **no. 1**.

Block the drive pulley. To do this, two procedures can be followed.

First Possible Procedure:

- Remove spark plugs.
- Lock crankshaft at TDC position. Refer to *BOTTOM END* section.

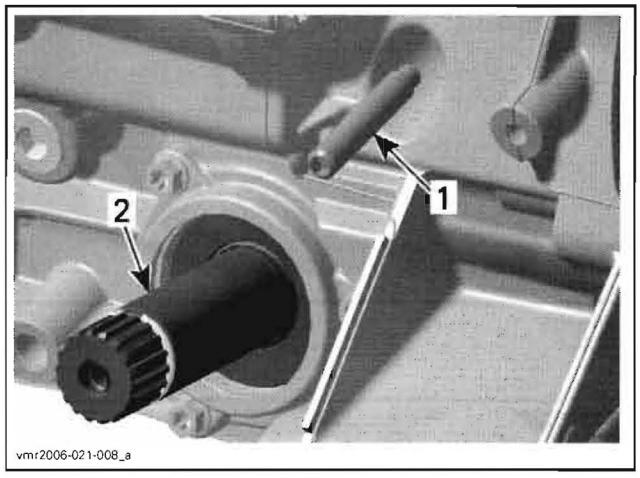

1. *Crankshaft locking bolt*
2. *Engine drive shaft (front side)*

Second Possible Procedure:

- Block drive pulley with the pulley holding tool (P/N 529 006 400).

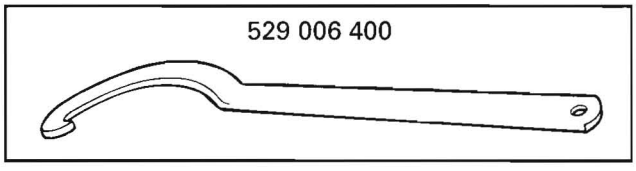

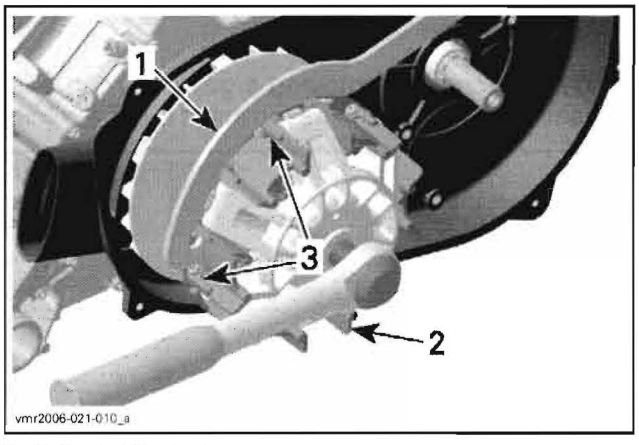

1. *Pulley holding tool*
2. *Drive pulley sliding sheave*
3. *Area to place holding tool hook*

When the drive pulley is blocked, mark sliding sheave and governor cup to ensure correct reinstallation.

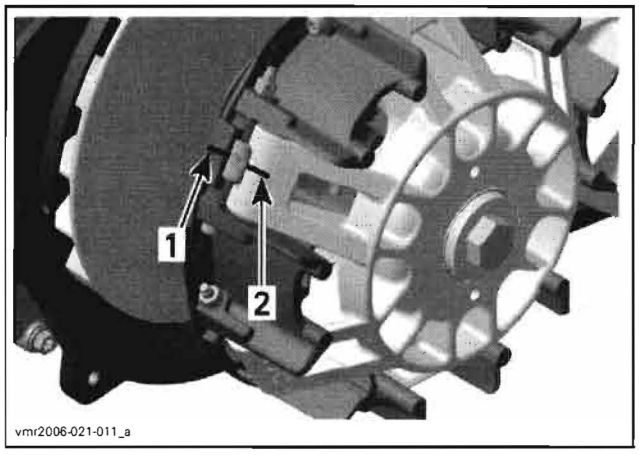

1. *Mark on drive pulley sliding sheave*
2. *Mark on governor cup*

Unscrew the drive pulley screw (**right hand thread**), then remove it as well as the conical spring washer and thrust washer.

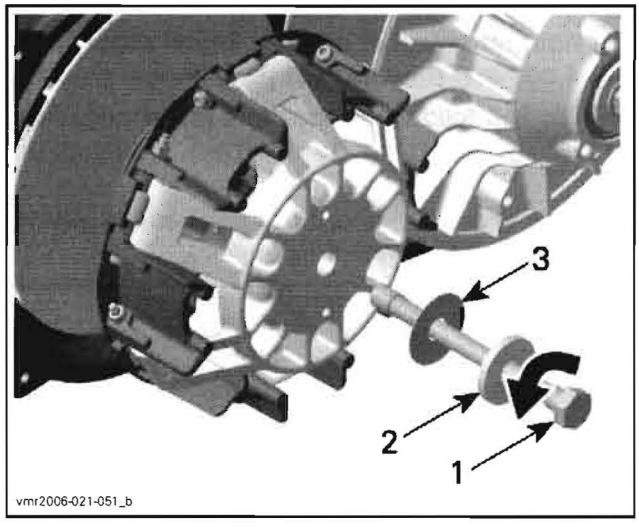

1. *Drive pulley screw*
2. *Conical spring washer*
3. *Thrust washer*

⚠ WARNING

Sliding sheave of drive pulley is spring loaded.

Push with your hand the sliding sheave **no. 2** of the drive pulley then remove the screw completely.

Slowly release sliding sheave.

Screw drive pulley puller (P/N 529 035 746) in fixed sheave and remove fixed pulley.



www.midwestmanuals.com
Sales@midwestmanuals.com

www.midwestmanuals.com

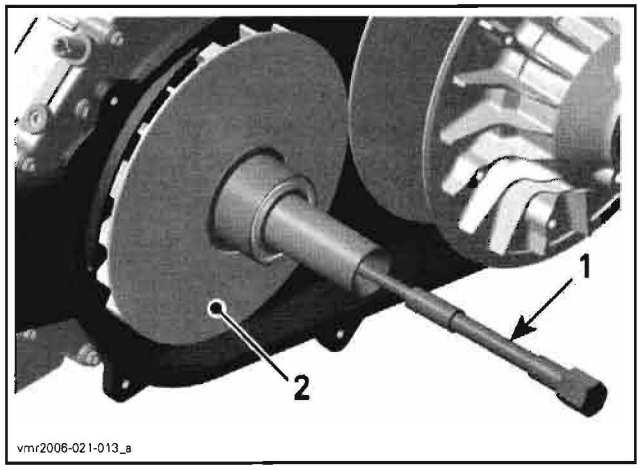

1. *Drive pulley puller*
2. *Fixed sheave*

Disassembly

Governor Cup

Carefully lift governor cup **no. 3** until slider shoes **no. 4** come at their highest position into guides.

NOTE: The following procedure is not necessary except if roller must be removed. Refer to *INSPECTION* before proceeding.

Remove slider shoes out of each bearing sleeve. Use a flat screwdriver if necessary.

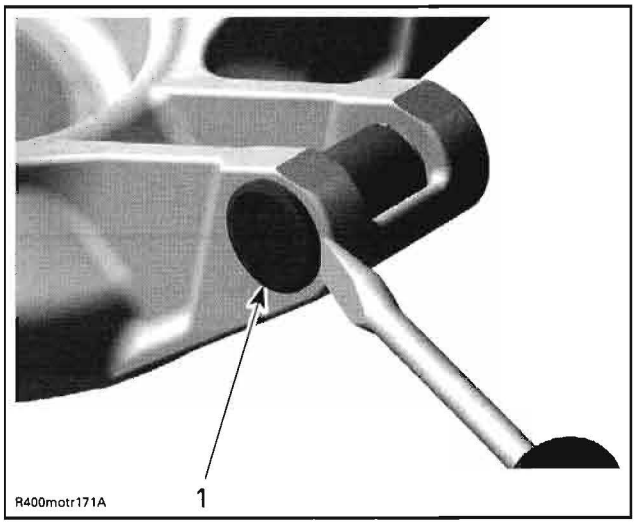

1. *Slider shoe*

Put governor cup on a vice to push out bearing sleeve of roller in the foreseen direction (against arrow). Use an appropriate punch (diameter of punch must be smaller than the bearing sleeve diameter).

CAUTION: Do not clamp the governor cup in the vice to push out bearing sleeve. Governor cup will be damaged.

NOTE: Use protection plates to avoid marks and/or damages to the governor cup.

CAUTION: Always replace all rollers at the same time. Partly worn rollers may cause damage to the CVT system.

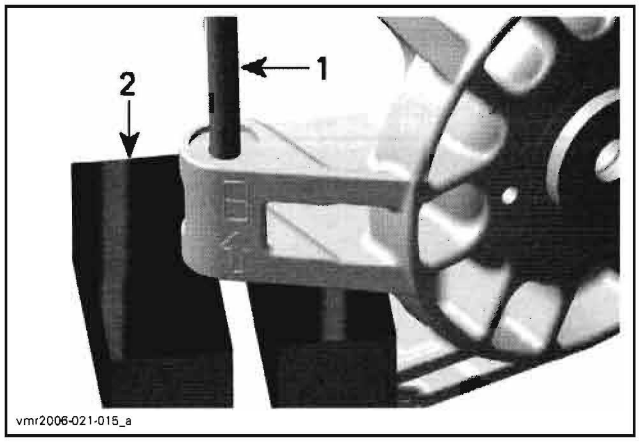

1. *Punch*
2. *Vice*

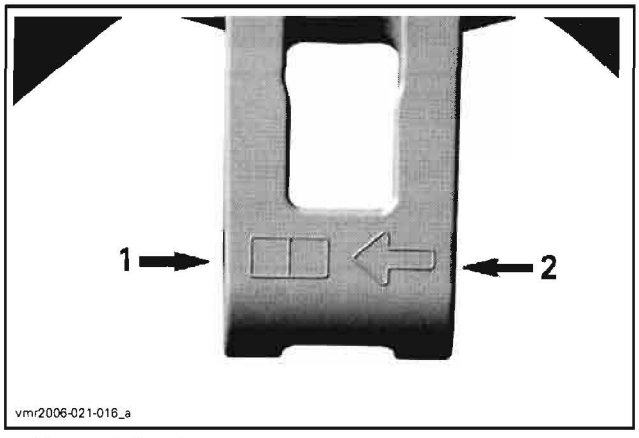

1. *Removal direction*
2. *Assembly direction*

NOTE: Whenever removing a governor cup with already two marked boxes replace it by a new one.

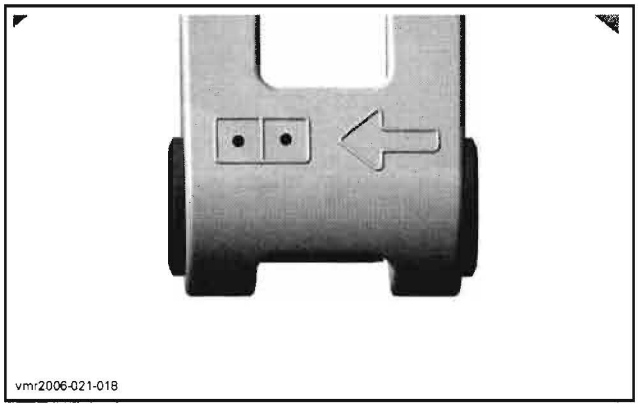

www.midwestmanuals.com
Sales@midwestmanuals.com

www.midwestmanuals.com

Sliding Sheave

Unscrew lock nut and remove centrifugal lever pivot bolt. This drive pulley is equipped with 6 levers.

Remove centrifugal lever **no. 7** and both thrust washers **no. 8**.

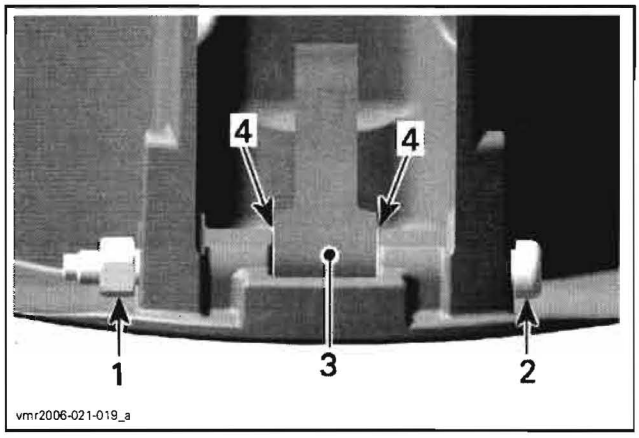

1. Lock nut
2. Centrifugal lever pivot bolt
3. Centrifugal lever
4. Thrust washers

Fixed Sheave

Remove friction washer **no. 12**.

⚠ WARNING

Always wear safety glasses to remove spring sleeves.

Pull and rotate one-way clutch slowly until the sheave of spring sleeves are visible.

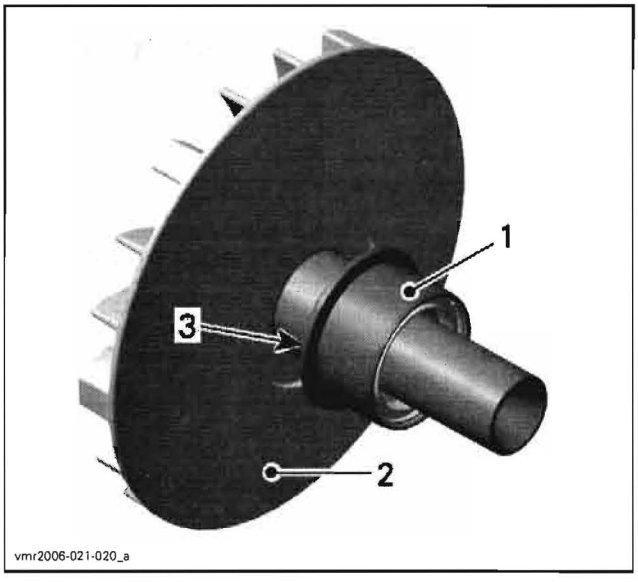

1. One-way clutch
2. Fixed sheave
3. Spring sleeve area

Hold both spring sleeves with fingers and release when one-way clutch is disengaged.

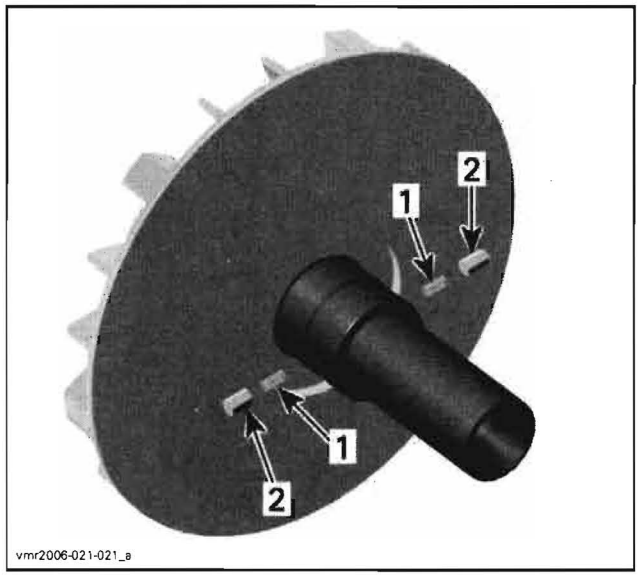

1. Springs
2. Spring sleeves

Cleaning

Clean pulley faces and shaft with fine steel wool and dry cloth.

Using a paper towel with pulley flange cleaner (P/N 413 711 809) cleaning solvent, clean crankshaft tapered end and the taper inside the fixed sheave of the drive pulley, crankshaft threads and threads of drive pulley screw **no. 15**.

CAUTION: Avoid contact between cleaner and crankshaft seal because damage may occur.

Remove all hardened oil deposits that have baked on crankshaft and pulley tapered surfaces with coarse or medium steel wool and/or sand paper no. 600.

CAUTION: Do not use any other type of abrasive.

Reclean mounting surfaces with paper towel and pulley flange cleaner (P/N 413 711 809).

Wipe off the mounting surfaces with a clean, dry paper towel.

CAUTION: Mounting surfaces must be free of any oil, cleaner or towel residue.

www.midwestmanuals.com
Sales@midwestmanuals.com

www.midwestmanuals.com

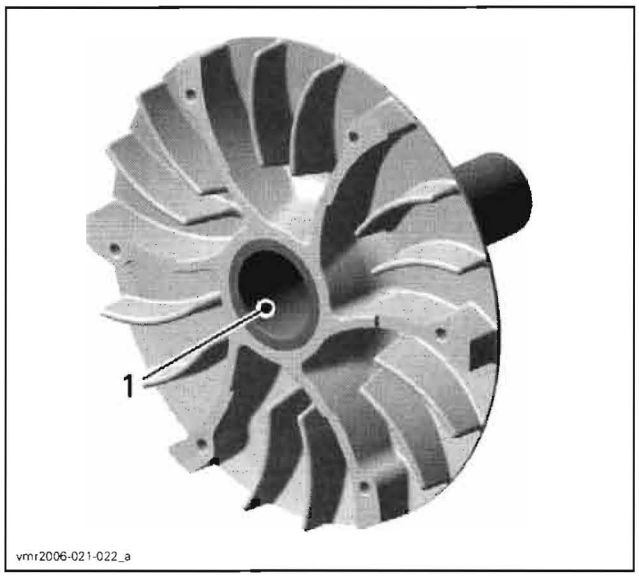

1. Taper of fixed sheave

Only use petrol base cleaner when cleaning bushings **no. 10** and **no. 11**.

CAUTION: Do not use acetone to clean bushing.

Inspection

Drive Pulley

Drive pulley should be inspected annually.

Governor Cup

Check governor cup for cracks or other visible damages. Replace if necessary.

Roller and Slider Shoe

Check each roller for roundness of external diameter.

Check if rollers move freely.

CAUTION: Whenever replacing rollers and slider shoes, always replace all rollers and slider shoes at the same time.

Check slider shoes for visible wear and replace if damaged.

NOTE: If necessary, use a screwdriver to remove slider shoes.

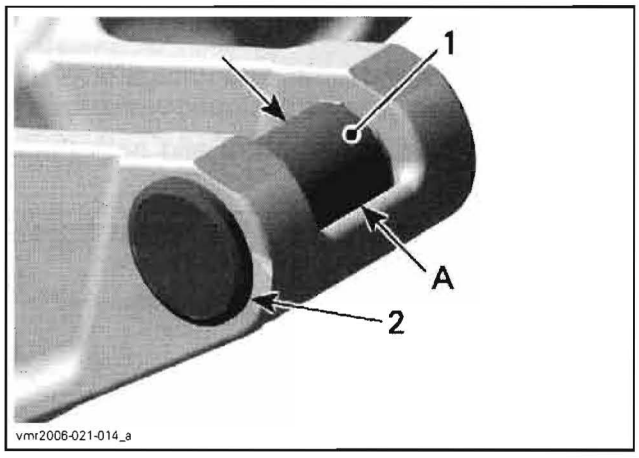

1. Roller
2. Slider shoe
A. Roller outer diameter

ROLLER OUTER DIAMETER	
NEW	13.70 to 13.80 mm (.539 to .543 in)
SERVICE LIMIT	13.20 mm (.519 in)
ROLLER INNER DIAMETER	
NEW	8.05 to 8.15 mm (.317 to .321 in)
SERVICE LIMIT	9.00 mm (.354 in)

Centrifugal Lever Pivot Bolt

Measure diameter of centrifugal lever pivot bolt **no. 9**, replace if it is out of specification.

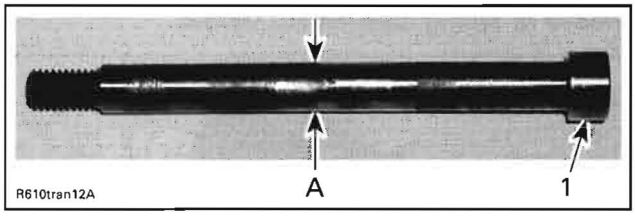

1. Centrifugal lever pivot bolt
A. Measure diameter here

CENTRIFUGAL LEVER PIVOT BOLT DIAMETER	
NOMINAL	6.078 to 6.100 mm (.239 to .240 in)
SERVICE LIMIT	6.00 mm (.236 in)

Centrifugal Lever

Check bushing diameter in the centrifugal lever **no. 7** for wear. Replace centrifugal lever if necessary.

www.midwestmanuals.com
Sales@midwestmanuals.com

www.midwestmanuals.com

CENTRIFUGAL LEVER BORE DIAMETER	
NOMINAL	6.035 to 6.078 mm (.238 to .239 in)
SERVICE LIMIT	6.200 mm (.244 in)

Replace centrifugal lever, thrust washers, centrifugal lever pivot bolts and lock nuts if the contact surfaces show heavy visible wear.

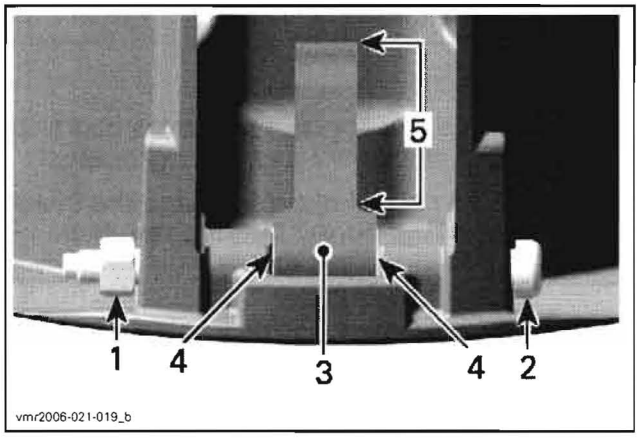

1. *Lock nut*
2. *Centrifugal lever pivot bolt*
3. *Centrifugal lever*
4. *Thrust washers*
5. *Contact surface to the roller*

⚠ WARNING

Whenever replacing centrifugal levers, always replace all lever at the same time. Otherwise, unbalanced drive pulley will occur because of levers difference.

Sliding Sheave

Check sliding sheave for cracks and sliding contact surface for excessive wear. Replace sliding sheave if necessary.

Measure centrifugal lever pivot bolt bores. Replace sliding sheave if bores are out of specification or otherwise damaged.

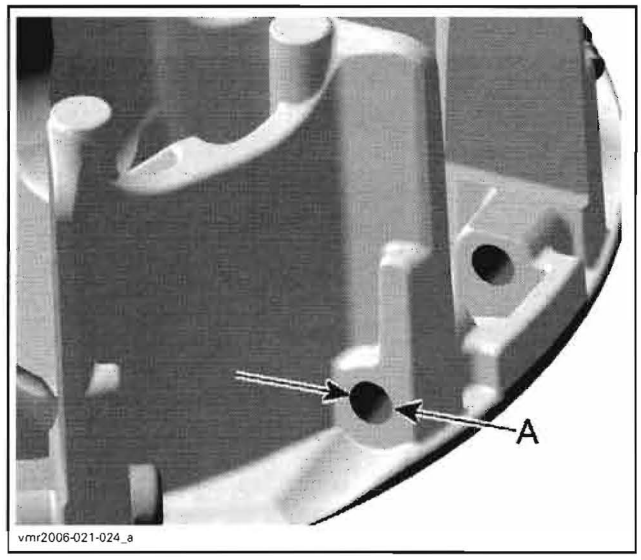

A. Centrifugal lever pivot bolt bore diameter

CENTRIFUGAL LEVER PIVOT BOLT BORE DIAMETER	
NOMINAL	6.113 to 6.171 mm (.241 to .243 in)
SERVICE LIMIT	6.300 mm (.248 in)

Measure bushing diameters of sliding sheave.

Use a dial bore gauge to measure bushing diameter. Measuring point must be at least 5 mm (1/4 in) from bushing edge.

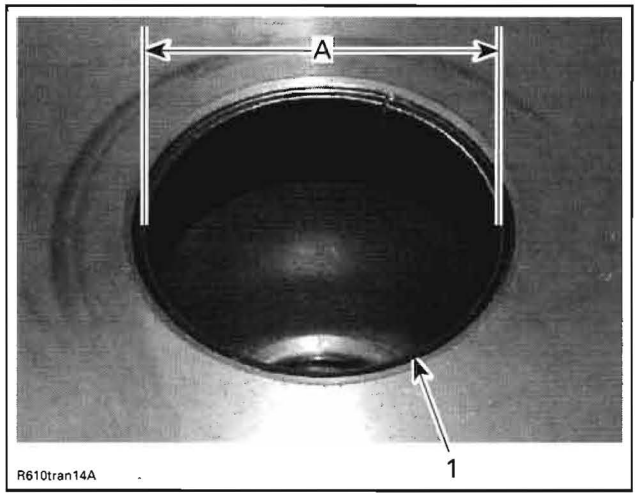

1. *Bushing on fixed sheave side*

A. Bore diameter of bushing

SLIDING SHEAVE LARGE BUSHING	
NOMINAL	55.000 to 55.040 mm (2.165 to 2.167 in)
SERVICE LIMIT	55.200 mm (2.173 in)

www.midwestmanuals.com
Sales@midwestmanuals.com

www.midwestmanuals.com

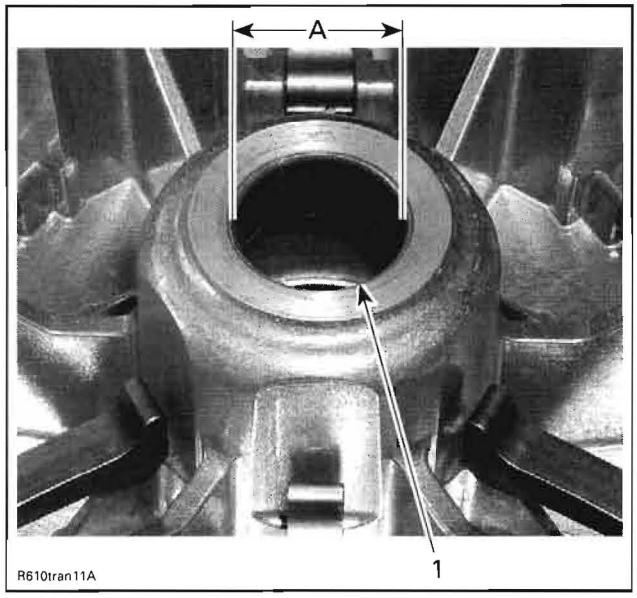

1. Bushing on governor cup side
A. Bore diameter of bushing

SLIDING SHEAVE SMALL BUSHING	
NOMINAL	32.000 to 32.040 mm (1.260 to 1.261 in)
SERVICE LIMIT	32.200 mm (1.268 in)

Replace sliding sheave if bushings **no. 10** and/or **no. 11** is (are) out of specification. Visually inspect coatings.

Fixed Sheave

Check fixed sheave contact surface to the governor cup for scratches or other damages. If so, replace fixed sheave.

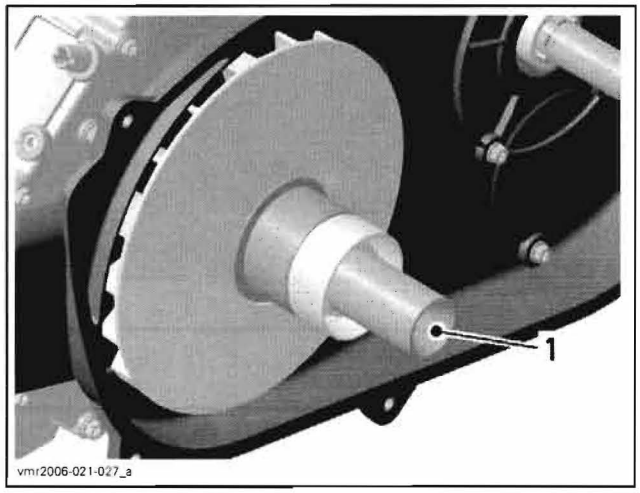

1. Visually check here

Check for any marks on fixed sheave plate. Replace if necessary.

Spring

Measure spring free length and squareness. If spring is out of specification, replace by a new one.

SPRING FREE LENGTH	
SERVICE LIMIT	85 mm (3.347 in)
CLUTCH SPRING SQUARENESS	
SERVICE LIMIT	4 mm (.157 in)

One-Way Clutch

Check bearings for excessive play and smooth operation. Replace one-way clutch if necessary.

CAUTION: Be careful not to damage the inside of one-way clutch during bearing removal.

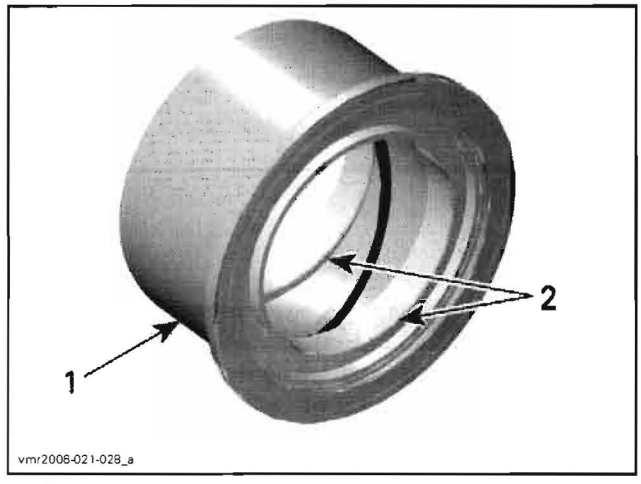

1. One-way clutch
2. Bearings

Measure length of spring sleeve **no. 14** and check if edges on top of the spring sleeve are excessively worn. If they out of specifications, replace both spring sleeve at the same time.

SPRING SLEEVE LENGTH	
NOMINAL	9.2 to 9.4 mm (.362 to .370 in)
SERVICE LIMIT	9 mm (.276 in)

Assembly

For assembly, reverse the disassembly procedure. Pay attention to following details.

One-Way Clutch

NOTE: Using Isoflex grease Topas NB 52 (P/N 293 550 021), lubricate spring and spring sleeve **no. 14** and between one way clutch bearings **no. 13**.

www.midwestmanuals.com
Sales@midwestmanuals.com

www.midwestmanuals.com

Friction Washer

NOTE: Apply Isoflex grease Topas NB 52 (P/N 293 550 021) on both sides of friction washer no. 12.

NOTE: Friction washer has to be assembled with collar towards to the one way clutch.

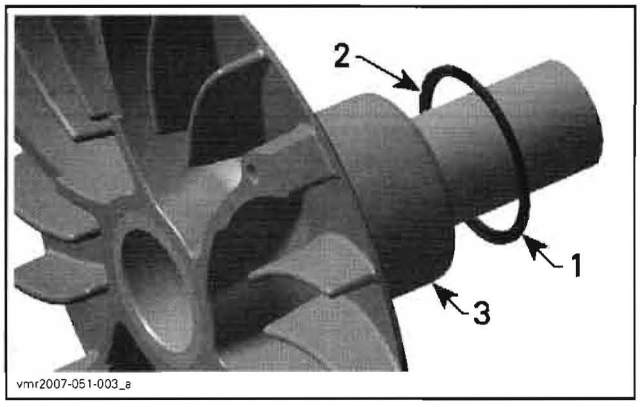

1. *Friction washer*
2. *Collar*
3. *One way clutch*

Sliding Sheave

Install centrifugal levers no. 7 with their thrust washers no. 8.

CAUTION: Centrifugal levers must move easily after installation.

Governor Cup

Rebuild governor cup with new bearing sleeves, thrust washers no. 6, rollers and slider shoes.

CAUTION: Final position has to be aligned with the contact surface of the slider shoes (no protrusion).

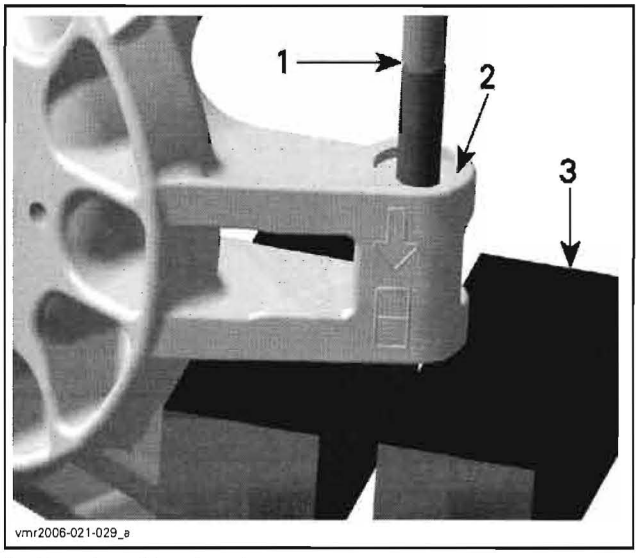

1. *Top edge of bearing sleeve*
2. *Mating surface of slider shoes*
3. *Vice*

Each time when replacing the bearing sleeves sign the foreseen box with a punch.

CAUTION: Do not tap too hard. Violent damage of the governor cup may appear.

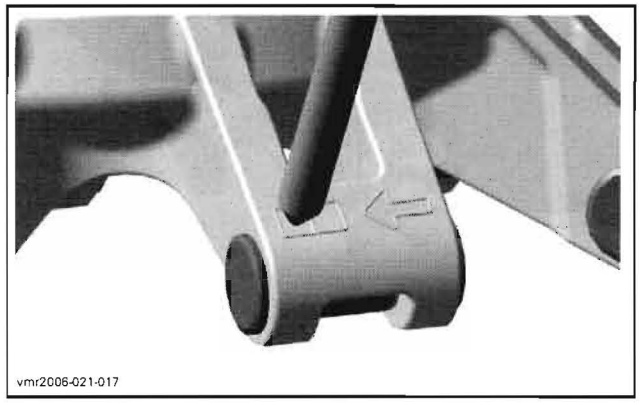

CAUTION: Rollers must move easily after installation.

Insert slider shoes into governor cup to properly slide in guides.

Installation

For installation, reverse the removal procedure. Pay attention to the following details.

⚠ WARNING

Do not apply antiseize or any lubricant on crankshaft and drive pulley tapers.

CAUTION: Never use any type of impact wrench at drive pulley removal and installation.

Clean mounting surfaces as described in *CLEANING* above.

Install drive pulley on crankshaft extension.

CAUTION: Do not forget to place thrust washer prior to install conical spring washer.

Install conical spring washer with its concave side towards drive pulley then install drive pulley screw.

www.midwestmanuals.com
Sales@midwestmanuals.com

www.midwestmanuals.com

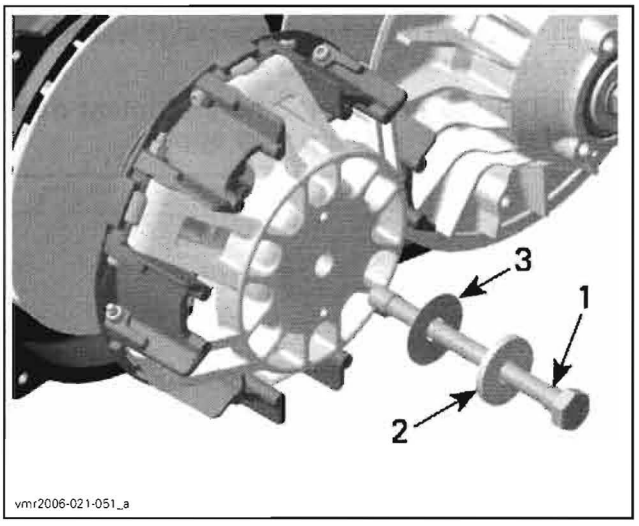

1. Drive pulley screw
2. Conical spring washer
3. Thrust washer

⚠ WARNING

Never substitute conical spring washer and/or screw with jobber ones. Always use BRP genuine parts for this particular case.

To torque the drive pulley screw, block the drive pulley. Refer at the beginning of this section for the two possible procedures.

When the drive pulley is blocked, torque screw to 100 N•m (74 lbf•ft).

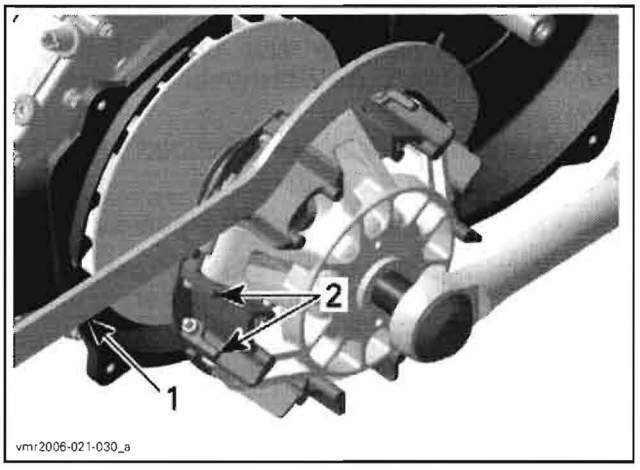

1. Pulley holding tool (P/N 529 006 400)
2. Drive pulley removal/installation area

DRIVEN PULLEY

Removal

Remove drive belt (see *DRIVE BELT* above).

Using the pulley holding tool (P/N 529 035 771), hold the driven pulley during the removal of the driven pulley screw. **Do not remove screw completely.**



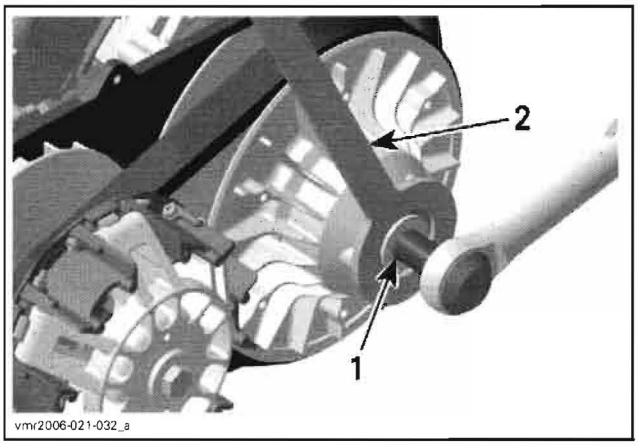

1. Driven pulley screw
2. Pulley holding tool

Push the driven pulley and maintain it in this position during the removal of screw. Remove driven pulley screw and washer.

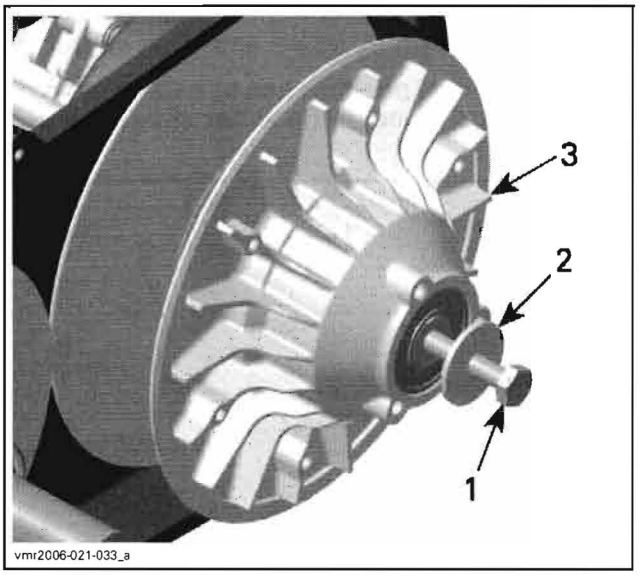

1. Driven pulley screw
2. Thrust washer
3. Driven pulley fixed sheave

⚠ WARNING

Driven pulley is spring loaded. Hold driven clutch pulley tight and slowly remove the driven pulley screw to release spring tension.

www.midwestmanuals.com
Sales@midwestmanuals.com

www.midwestmanuals.com

Remove the driven pulley with the spring, cam and the plate.

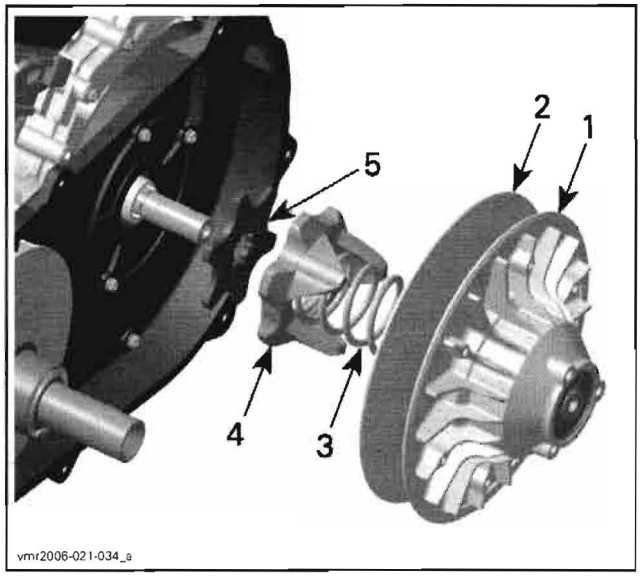

1. *Fixed sheave of driven pulley*
2. *Sliding sheave of driven pulley*
3. *Spring*
4. *Cam*
5. *Plate*

Disassembly

Fixed Sheave

Remove retaining ring and lift torque gear.

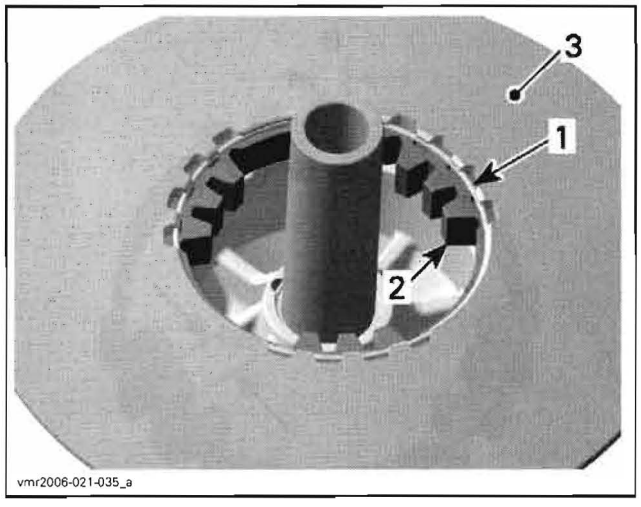

1. *Retaining ring*
2. *Torque gear*
3. *Fixed sheave of driven pulley*

NOTE: The following procedure is not necessary except if ball bearing or shaft must be removed. Refer to *INSPECTION* before proceeding.

Heat ball bearing area up to 100°C (212°F) before removing ball bearing.

Use a soft hammer to push shaft with bearing **no. 17** out of fixed sheave.

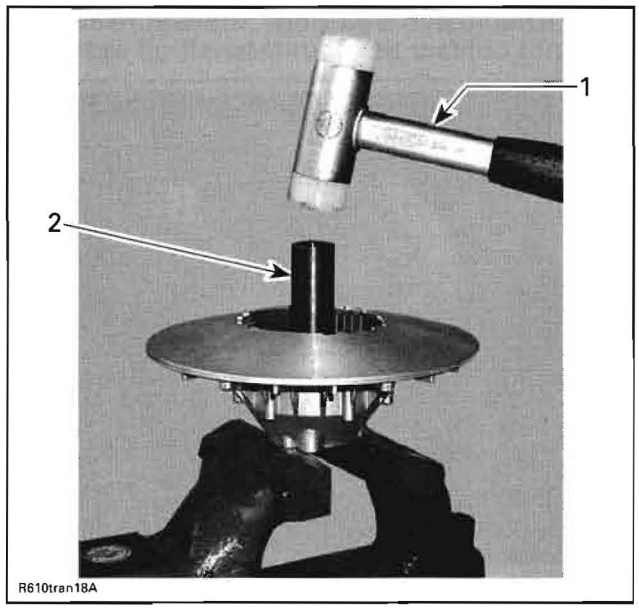

1. *Soft hammer*
2. *Shaft*

Remove shaft from ball bearing.

Remove distance sleeve and O-ring **no. 26** from countershaft.

Replace O-ring if brittle, hard or damaged.

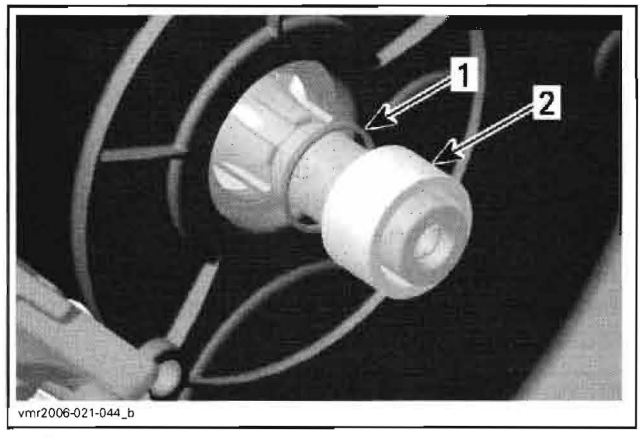

1. *O-ring*
2. *Distance sleeve*

Cleaning

When a dust deposit has to be removed from the cam or the shaft, use dry cloth.

Clean pulley faces and shaft with fine steel wool and dry cloth.

Use pulley flange cleaner (P/N 413 711 809) to clean driven pulley.

Clean the CVT air guide area from contamination.

Using a paper towel with pulley flange cleaner (P/N 413 711 809) to clean countershaft end and the inside of the shaft **no. 23**.

www.midwestmanuals.com
Sales@midwestmanuals.com

www.midwestmanuals.com

CAUTION: To avoid damage, make sure cleaner does not contact the countershaft oil seal.

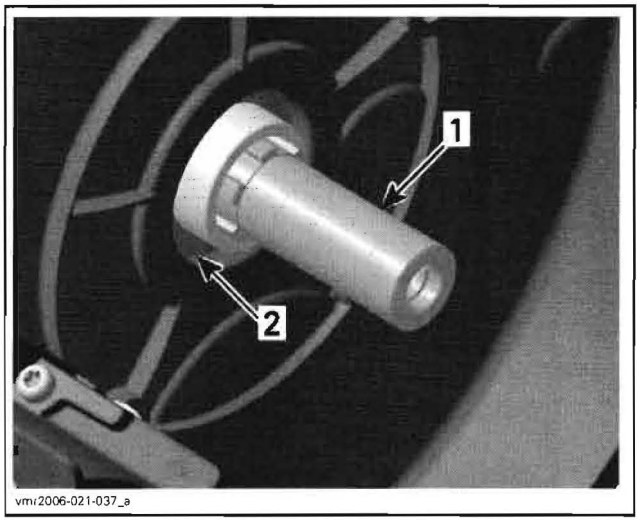

1. *Countershaft support*
2. *Countershaft oil seal*

Inspection

Sliding Sheave

Check sliding sheave for cracks and sliding contact surface for excessive wear. Replace sliding sheave if necessary.

Check bushings **no. 22** for cracks, scratch and for free movement when assembled to sliding sheave.

Using a dial bore gauge measure bushing diameter. Measuring point must be at least 5 mm (1/4 in) from bushing edge.

This bushing can not be replaced. Replace sliding sheave if bushings **no. 22** are out of specification. Visually inspect coatings.

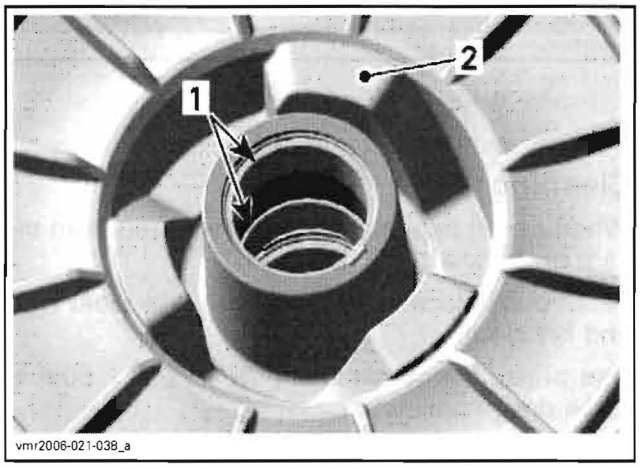

1. *Bushings*
2. *Backside of sliding sheave of driven pulley*

BUSHINGS BORE DIAMETER	
NOMINAL	30.060 to 30.100 mm (1.183 to 1.185 in)
SERVICE LIMIT	30.200 mm (1.189 in)

Fixed Sheave

Check fixed sheave for cracks and excessive wear. Replace fixed sheave if necessary.

Check ball bearing for free play and smooth operation. Replace if necessary.

Check shaft for heavy wear or visible damage. Replace if necessary.

If the shaft is removed, using a dial bore gauge, measure bushing diameter. Measuring point must be at least 5 mm (1/4 in) from bushing edge.

This bushing can not be replaced. Replace fixed sheave if bushing **no. 18** is out of specification. Visually inspect coatings.

BUSHING BORE DIAMETER	
NOMINAL	30.060 to 30.100 mm (1.183 to 1.185 in)
SERVICE LIMIT	30.200 mm (1.189 in)

Check torque gear for visible damage and cracks.

Measure wear limit with a caliper.

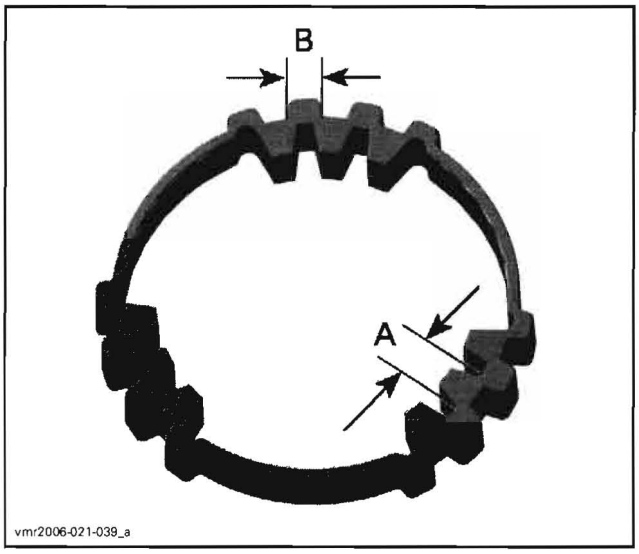

A. *Measurement inside*
B. *Measurement outside*

WEAR ON TEETH BOTH SIDES	
SERVICE LIMIT	7.500 mm (.295 in)

www.midwestmanuals.com
Sales@midwestmanuals.com

www.midwestmanuals.com

Cam

Check cam for visible damage and wear limit with a caliper.

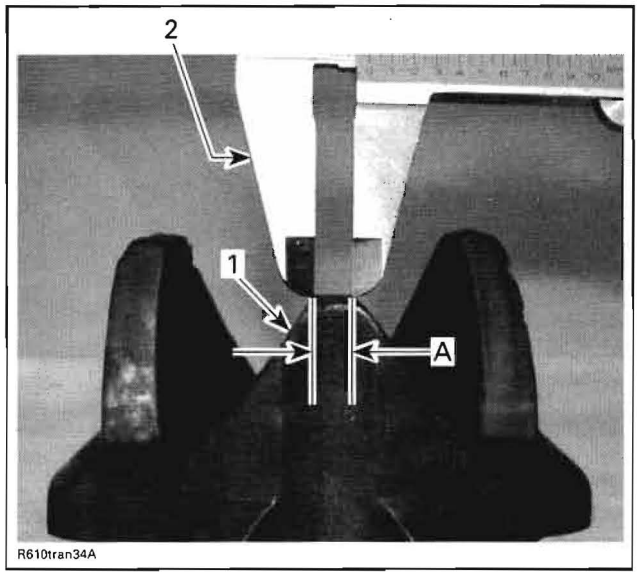

1. Contact surface
2. Caliper
A. Width to be measured due to wear on contact surface

WIDTH ON TOP SURFACE	
SERVICE LIMIT	9.00 mm (.354 in)

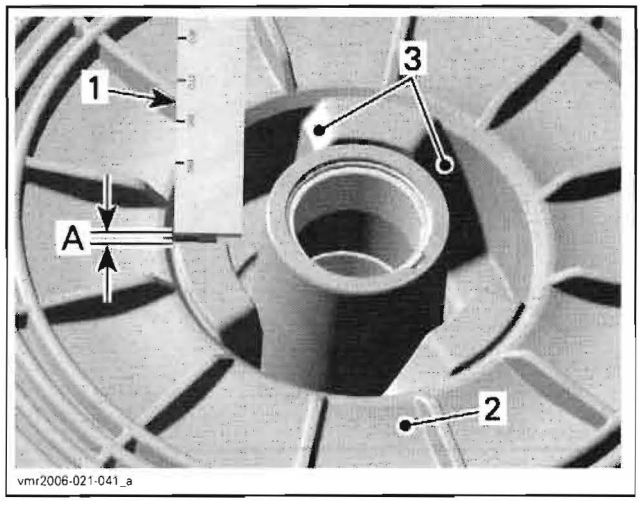

1. Caliper
2. Sliding sheave
3. Contact surface
A. Wear to be measured

WEAR ON CONTACT SURFACE	
SERVICE LIMIT	1.00 mm (.039 in)

Spring

Measure spring free length and squareness. If spring is out of specification, replace by a new.

SPRING FREE LENGTH	
SERVICE LIMIT	125 mm (4.921 in)
CLUTCH SPRING SQUARENESS	
SERVICE LIMIT	3.8 mm (.150 in)

Assembly

For installation, reverse the removal procedure. Pay attention to following details.

Heat ball bearing area up to 100°C (212°F) before ball bearing installation.

NOTE: Place new ball bearing in a freezer for 10 minutes before installation.

Install ball bearing with the writing on top and push only on the outer ring.

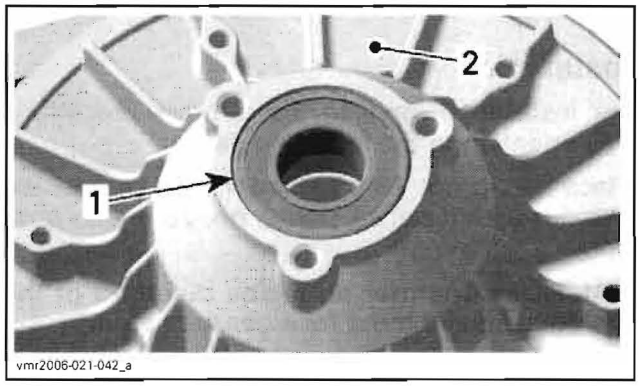

1. Ball bearing
2. Fixed sheave of driven pulley

CAUTION: Do not use hammer, use press machine only.

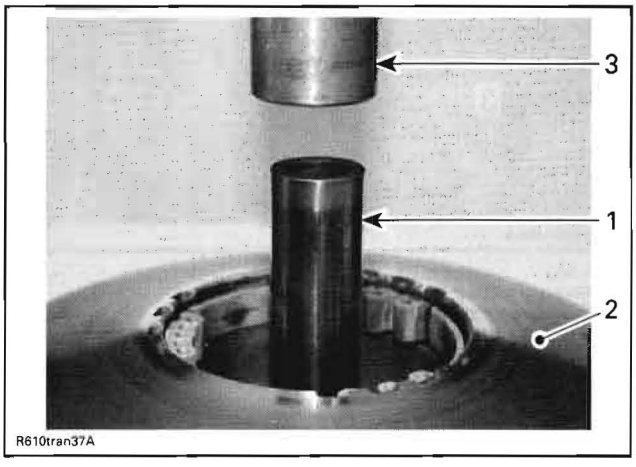

1. Shaft
2. Fixed sheave
3. Press machine

Install torque gear then secure it with retaining ring.

www.midwestmanuals.com
Sales@midwestmanuals.com

www.midwestmanuals.com

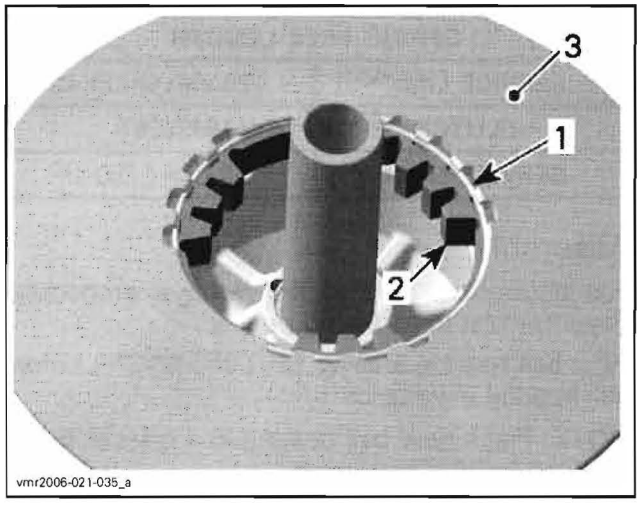

1. *Retaining ring*
2. *Torque gear*
3. *Fixed sheave of driven pulley*

Installation

For installation, reverse the removal procedure. Pay attention to the following details.

Place O-ring **no. 26** on countershaft splines and move it with distance sleeve **no. 25** in end position.

CAUTION: Chamfer on inside diameter of the distance sleeve must face gearbox side.

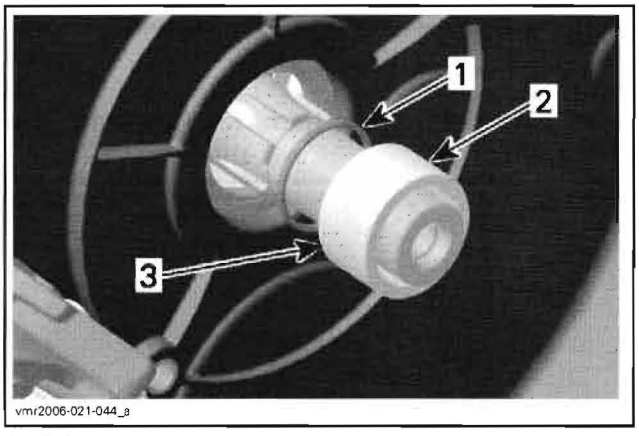

1. *O-ring*
2. *Distance sleeve*
3. *Chamfered area of distance sleeve*

Install cam retainer on countershaft end the right way.

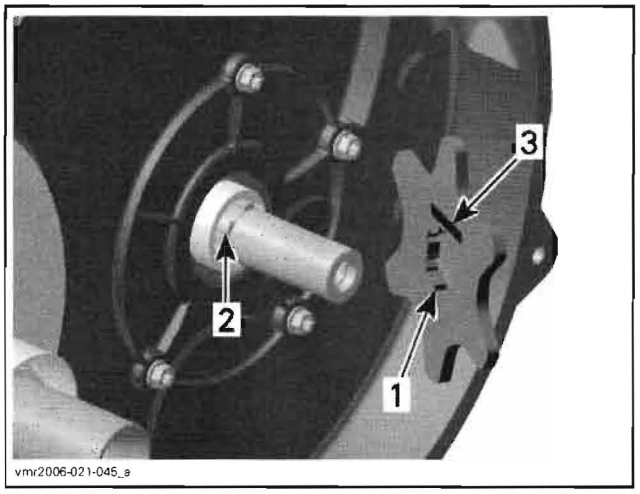

1. *Sharp edge of cam retainer to engine side*
2. *Countershaft spline*
3. *Inscription*

Install cam **no. 24**.

Install sliding sheave **no. 21** into fixed sheave **no. 16**.

Place spring behind sliding sheave then align driven pulley with cam.

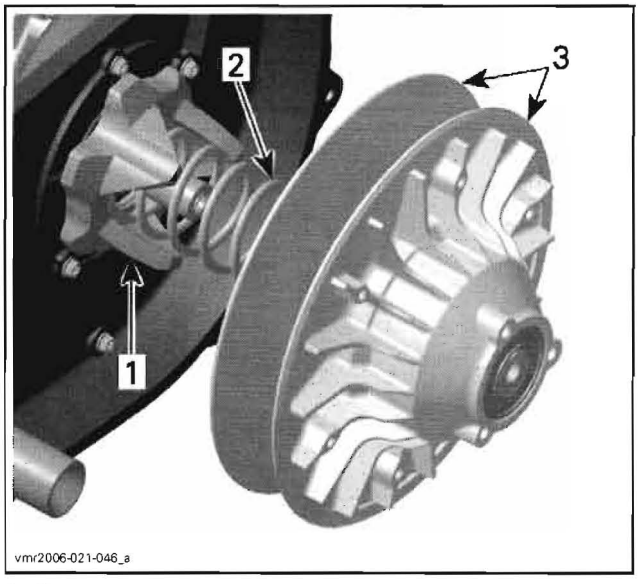

1. *Cam*
2. *Spring*
3. *Driven pulley*

With your hand, push the driven pulley on the shaft to compress the spring. Install the driven pulley screw and thrust washer.

⚠ WARNING

Driven pulley is a spring loaded system.

www.midwestmanuals.com
Sales@midwestmanuals.com

www.midwestmanuals.com

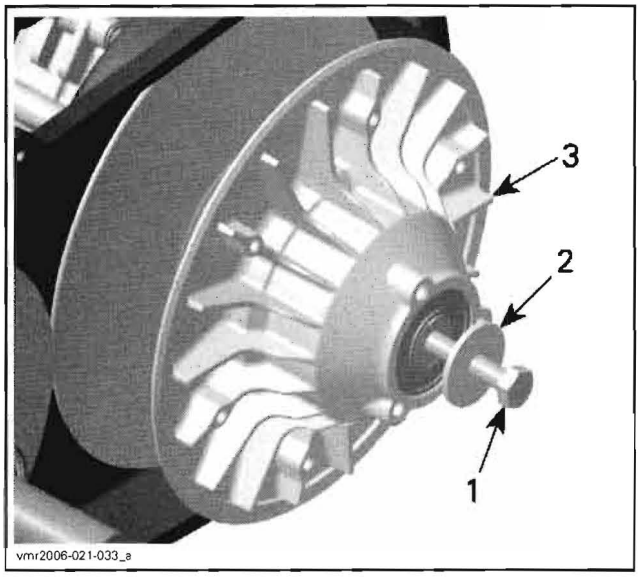

1. Driven pulley screw
2. Thrust washer
3. Driven pulley fixed sheave

NOTE: Driven pulley end-play is 0 (zero).

Torque driven pulley screw.

CVT AIR GUIDE

Removal

Remove the drive pulley and the driven pulley.

Unscrew the clamps retaining the CVT air hoses.

Remove CVT air guide.

Inspection

Clean CVT air guide from contamination

Check O-rings if brittle, hard or damaged. Replace if necessary.

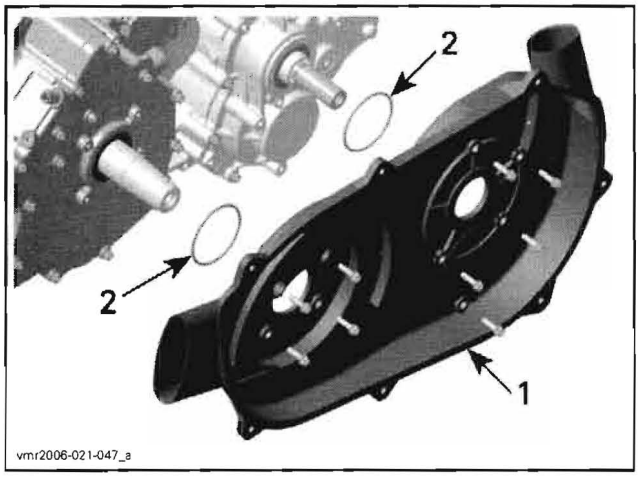

1. CVT air guide
2. O-rings

Installation

For installation reverse the removal procedure.

www.midwestmanuals.com
Sales@midwestmanuals.com

www.midwestmanuals.com

www.midwestmanuals.com
Sales@midwestmanuals.com

www.midwestmanuals.com

FRONT DRIVE

SERVICE TOOLS

Description	Part Number	Page
CV boot clamp pliers	295 000 069	312
pliers Oetiker 1099	295 000 070	312
differential spanner socket	529 035 649	314
backlash measurement tool	529 035 665	315
joint extractor tool	529 036 005	312

SERVICE PRODUCTS

Description	Part Number	Page
XP-S synthetic grease	293 550 010	311, 316, 318
XP-S synthetic gear oil	293 600 043	313
Loctite 277	293 800 073	316

Midwest Manuals
sales@midwestmanuals.com
www.midwestmanuals.com

www.midwestmanuals.com
Sales@midwestmanuals.com

www.midwestmanuals.com

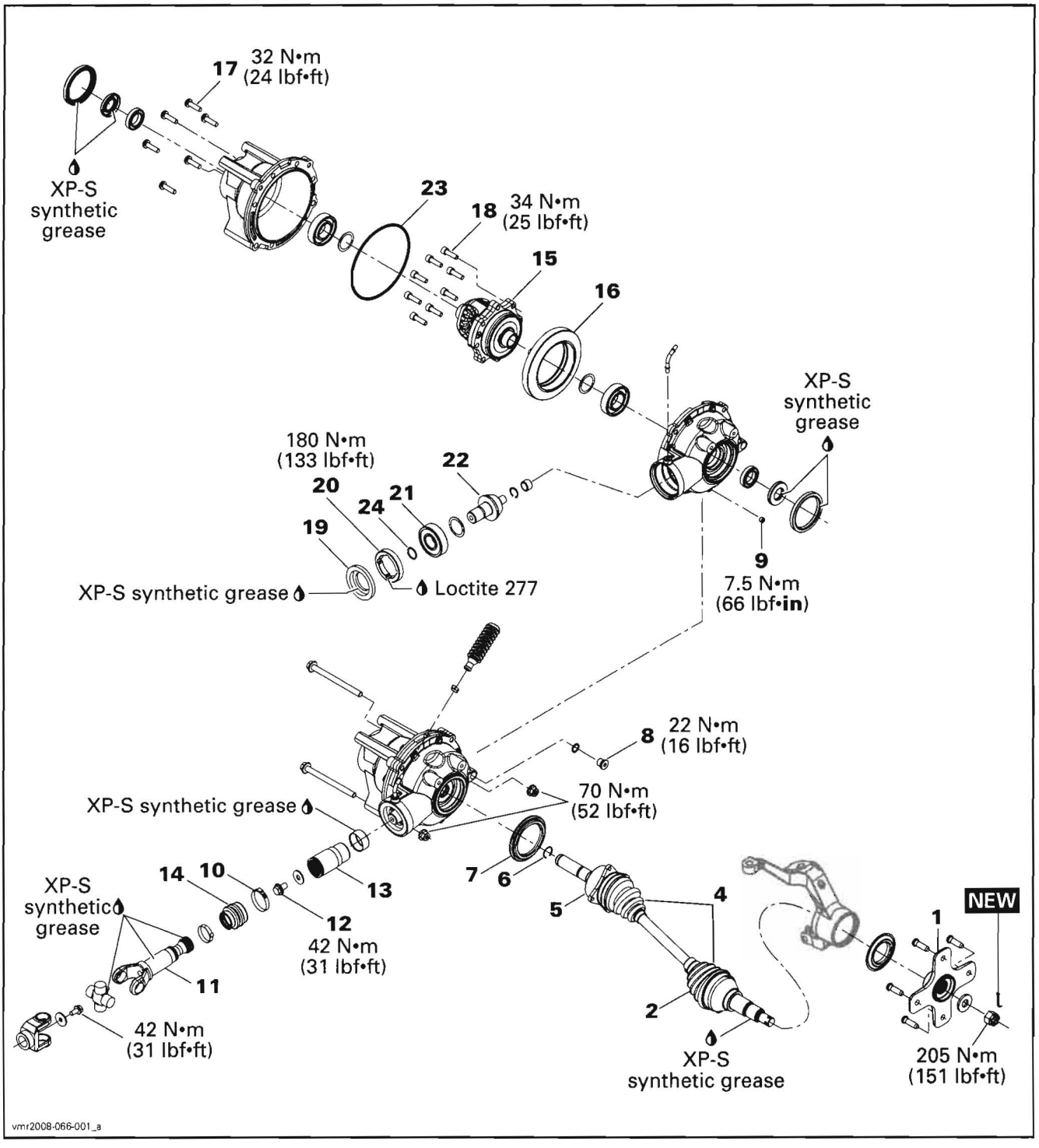

www.midwestmanuals.com
Sales@midwestmanuals.com

www.midwestmanuals.com

GENERAL

The procedure explains below is the same for the RH and LH sides unless otherwise instructed.

During assembly/installation, use torque values and service products as in the exploded views.

Clean threads before applying threadlocker. Refer to *SELF-LOCKING FASTENERS* and *LOCTITE APPLICATION* at the beginning of this manual for complete procedure.

⚠ WARNING

Torque wrench tightening specifications must strictly be adhered to.
Locking devices (e.g.: locking tabs, elastic stop nuts, cotter pins, etc.) must be replaced with new ones.

PROCEDURES

TIRES AND WHEELS

⚠ WARNING

When the tires are replaced, never install a bias tire with a radial tire. Such a combination could create handling and/or stability problems.
Do not mix tires of different size and/or design on the same axle.
Front and rear tire pairs must be the identical model and manufacturer.
For unidirectional tread pattern, ensure that the tires are installed in the correct direction of rotation.
The radial tires must be installed as a complete set.
Severe injury or death can result if these instructions are not followed.

The tires are directional and their rotation must be kept in a specific direction for proper operation.

Using the next table, torque wheel nuts in accordance with the following illustration.

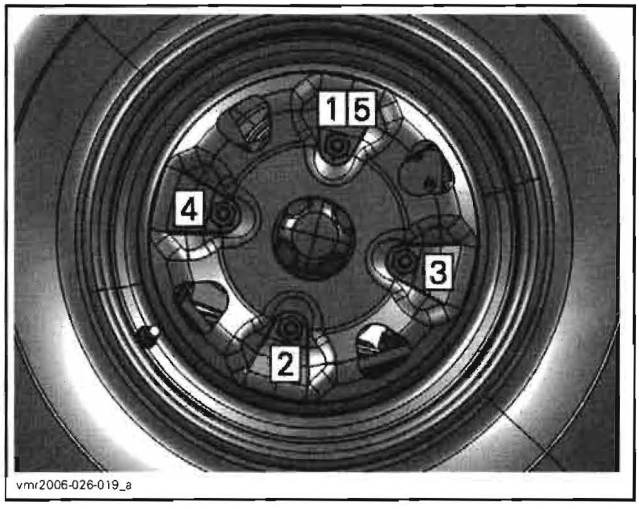

vmr2006-026-019_a

CAUTION: Always use the recommended wheel nuts. Using a different nut could cause damages to the rim.

WHEEL NUT TORQUE	
All steel wheels	70 N•m (52 lbf•ft)
All aluminum wheels (except for Outlander MAX 800 Ltd)	100 N•m (74 lbf•ft)
Outlander MAX 800 Ltd (BLACK aluminum wheels)	70 N•m (52 lbf•ft)

Outlander 650 and 800 Series and Renegade Models

On these models, wheel balancing is necessary. To perform this operation, use a wheel balancer and adhesive weights.

WHEEL HUB

Wheel Hub Removal

Raise the front of vehicle, support it securely on jack stands and remove front wheel.

Apply parking brake or select 4WD position and place transmission lever on P.

Remove cotter pin and discard it.

Unscrew the castellated nut.

Remove the Belleville washer.

www.midwestmanuals.com
Sales@midwestmanuals.com

www.midwestmanuals.com

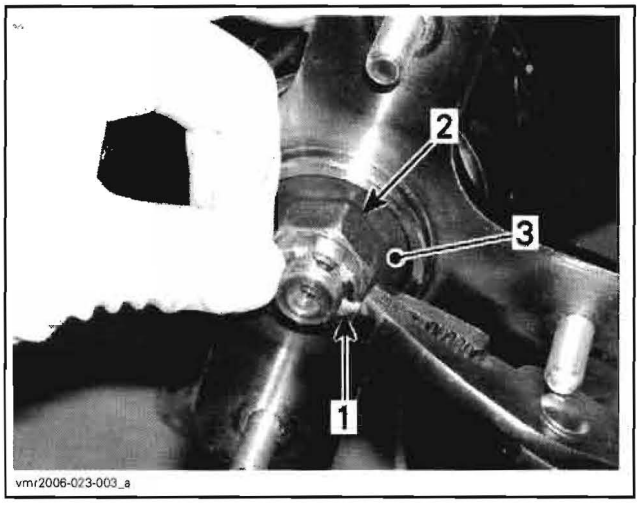

TYPICAL
1. *Cotter pin*
2. *Castellated nut*
3. *Belleville washer*

Renegade Models

Remove caliper from knuckle. Refer to *BRAKES*.

All Models

Pull wheel hub **no. 1** to remove it.

Wheel Hub Inspection

Check wheel hub for cracks or other damages.

Check inner splines for wear or other damages.

If any damage is detected on wheel hub, replace it with a new one.

Check wear ring. If damage is apparent, replace the wear ring.

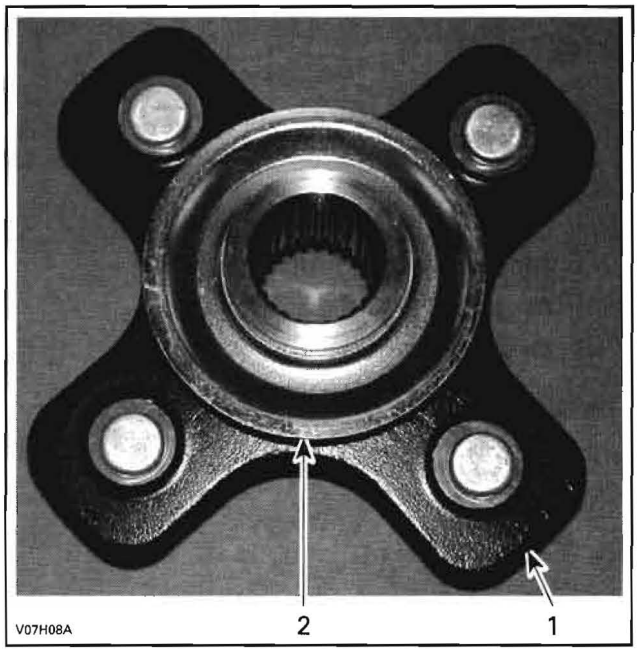

TYPICAL — FOR ALL OUTLANDER
1. *Wheel hub*
2. *Wear ring*

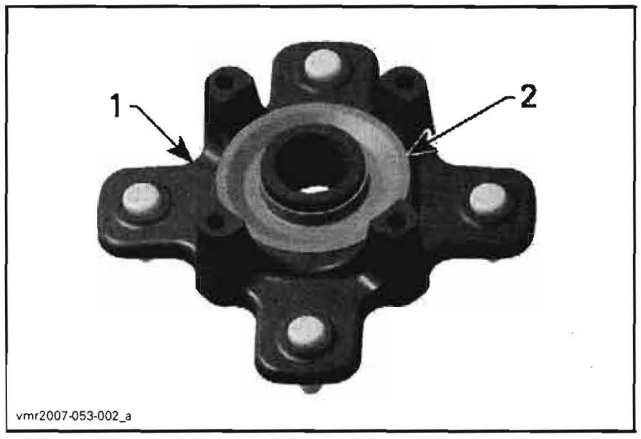

RENEGADE MODELS
1. *Wheel hub*
2. *Wear ring*

Wheel Hub Installation

The installation is the reverse of removal procedure.

Install Belleville washer so that the inside diameter protrudes outward and contacts the nut.

Tighten the castellated nut on the drive shaft end to 205 N•m (151 lbf•ft) and further tighten until one of its grooves is aligned with a cotter pin hole. Install a **NEW** cotter pin and the wheel cap. Fold one pin of cotter pin over drive shaft end.

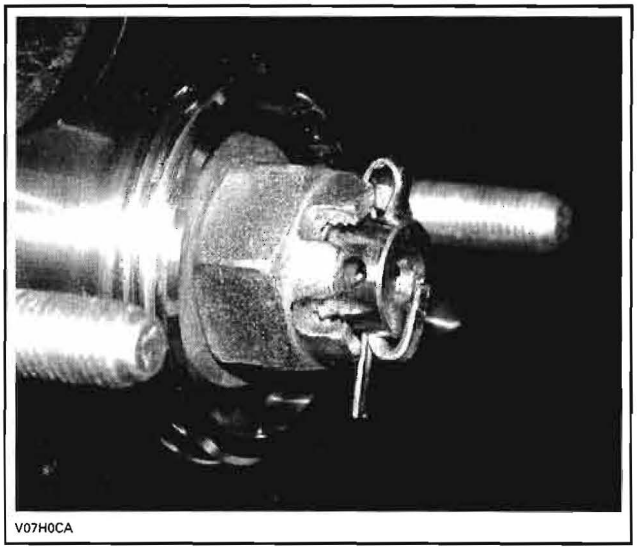

FRONT DRIVE SHAFT

Drive Shaft Removal

Remove the appropriate wheel hub **no. 1**, see above.

Outlander 500 Series

Unscrew bolts holding strut to knuckle.

www.midwestmanuals.com
Sales@midwestmanuals.com

www.midwestmanuals.com

Outlander 650/800 Series and Renegade Models

Remove bolt that attach the shock absorber to the upper suspension arm.

Detach upper suspension arm from knuckle.

All Models

Remove ball joint retaining bolt or ball joint nut from knuckle.

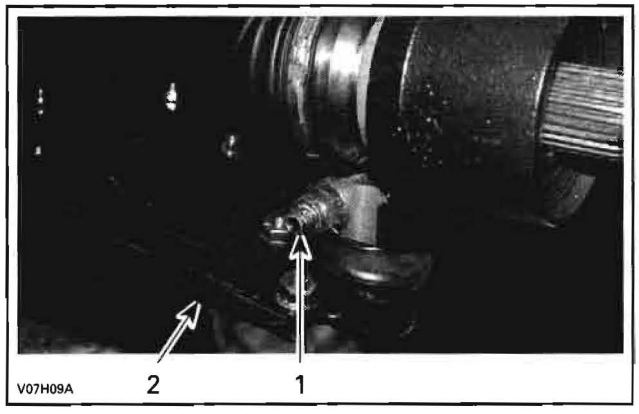

ALL OUTLANDER MODELS
1. *Ball joint retaining bolt*
2. *Lower suspension arm*

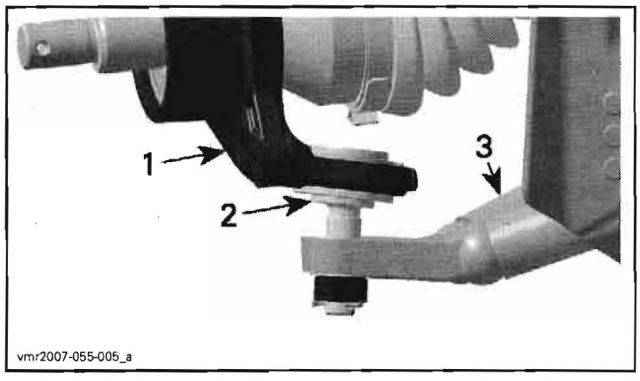

RENEGADE MODELS
1. *Knuckle*
2. *Lower ball joint*
3. *Lower suspension arm*

Separate knuckle from lower suspension arm.

Move CV joint **no. 2** out of knuckle then place the knuckle and the tie-rod out of way.

All Outlander Models

Remove caliper. Refer to *BRAKES*.

All Models

Pull drive shaft out of differential **no. 3**.

NOTE: Pull drive shaft strongly.

Drive Shaft Inspection

Inspect the condition of boots **no. 4**. If there is any damage or evidence of leaking lubricant, replace them. Refer to *DRIVE SHAFT BOOT* further.

Check splines for excessive wear. Replace if necessary.

NOTE: If the splines on plunging joint **no. 5** are worn, a check of differential inner splines should be done.

Check the stop ring **no. 6** at the end of drive shaft. If wear is apparent, replace the wear ring **no. 7**.

Check if the bearings in knuckle move freely and smoothly. If not, replace them. Refer to *STEERING SYSTEM*.

Drive Shaft Installation

Apply XP-S synthetic grease (P/N 293 550 010) to the splines and insert the end of drive shaft in differential and pull joint a little to make sure that the stop ring is locked in differential side gear groove.

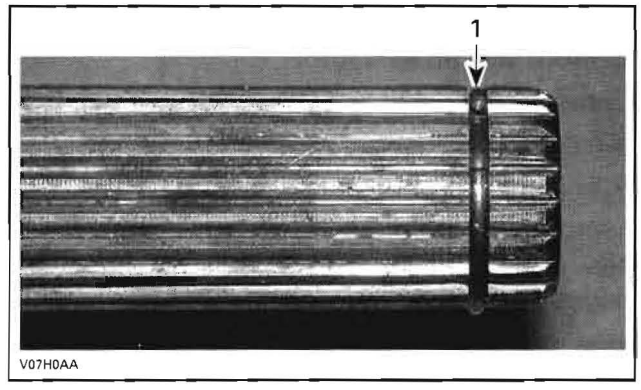

1. Stop ring

The wear ring should be closed to the differential.

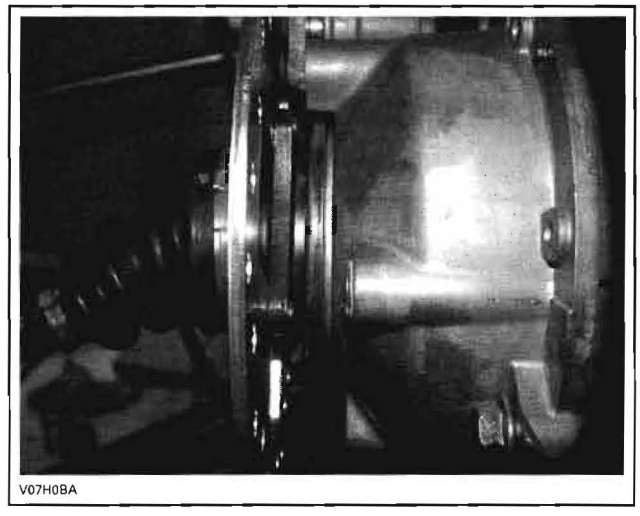

TYPICAL

www.midwestmanuals.com
Sales@midwestmanuals.com

www.midwestmanuals.com

Insert the other end of drive shaft in the knuckle and install the knuckle to the lower suspension arm. Install and torque the ball joint retaining bolts to 45 N•m (33 lbf•ft).

Install all other removed parts.

DRIVE SHAFT BOOT

Boot Inspection

Check bearing in plunging joint **no. 5** or CV joint **no. 2**. If bearing is hard to move, change plunging joint or CV joint.

Check circlip for damage, change as necessary.

Boot Removal

Remove clamps from rubber boot using CV boot clamp pliers (P/N 295 000 069) and pliers Oetiker 1099 (P/N 295 000 070).

Remove the large end of the boot from plunging joint **no. 5** or CV joint **no. 2**.

Separate the joint from the shaft. Two procedures can be done.

Without the Special Tool

Clamp joint housing in a vise.

Align shaft with joint.

Pull hard on shaft to remove from joint.

Remove boot from drive shaft.

Remove and discard the circlip. A new one is included in the boot kit.

With the Special Tool

Place drive shaft in vice with the joint downward.

Install the joint extractor tool (P/N 529 036 005) on bearing.

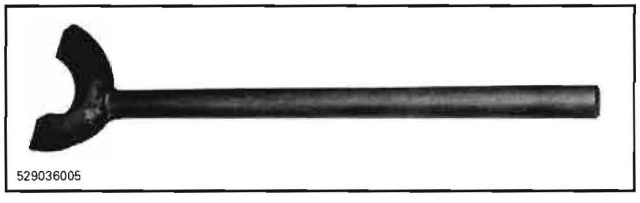

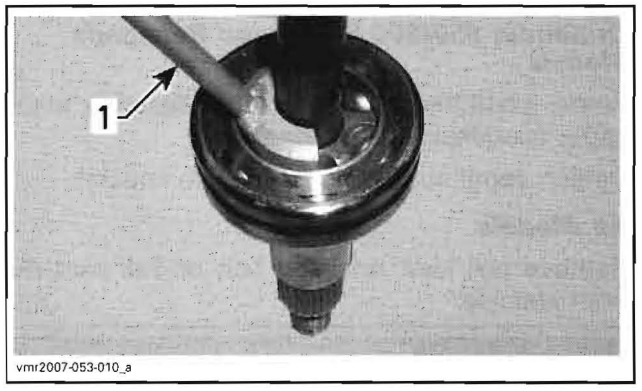

TYPICAL — CV JOINT SHOWN
1. Joint extractor tool

With an hammer, hit on the tool to separate joint from shaft.

When joint and shaft are separated, remove boot from drive shaft.

Remove and discard the circlip. A new one is included in the boot kit.

Boot Installation

For installation, reverse the removal procedure. Pay attention to the following details.

Insert the small clamp and the small end of boot on shaft.

Install the **NEW** circlip.

Install the joint in a vise (joint facing up).

Center circlip on shaft.

Carefully insert shaft into joint and push hard to engage circlip.

Pack bearing area with grease (included with the new boot kit).

NOTE: Do not use or add other grease.

Install all other removed parts.

FRONT DIFFERENTIAL

Oil Level

Clean filler plug prior to checking oil level.

www.midwestmanuals.com
Sales@midwestmanuals.com

www.midwestmanuals.com

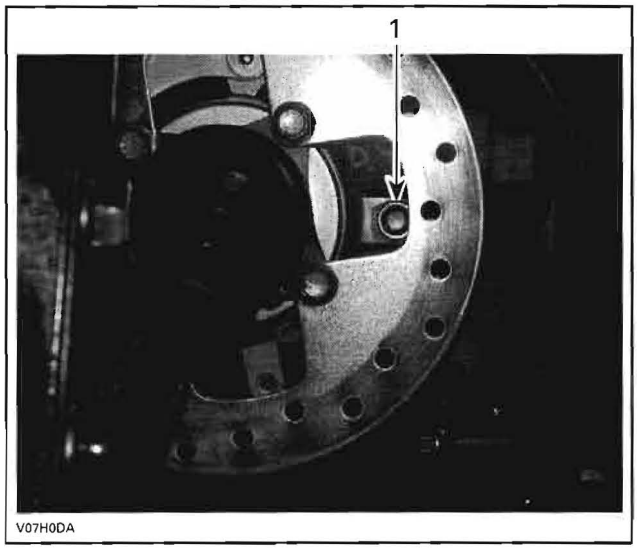

ALL MODELS EXCEPT RENEGADE
1. Filler plug

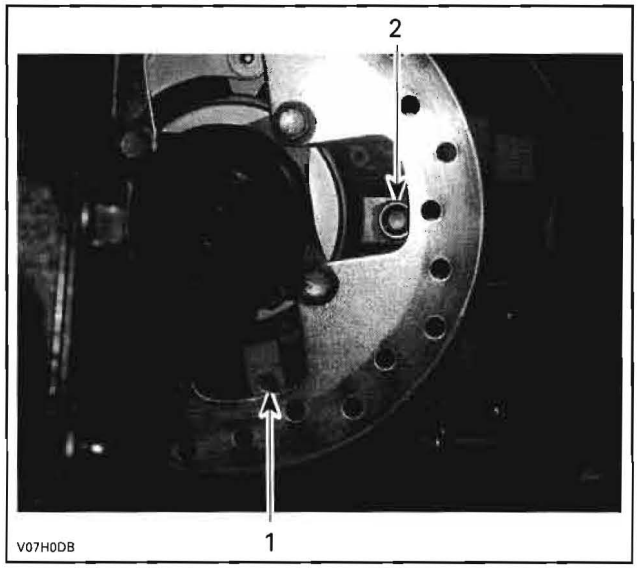

ALL MODELS EXCEPT RENEGADE
1. Drain plug
2. Filler plug

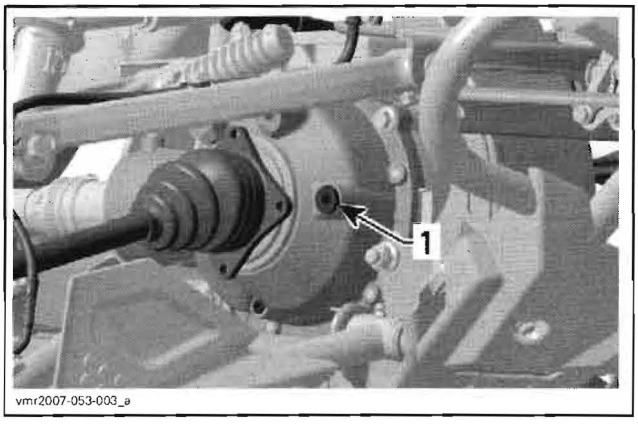

RENEGADE MODELS
1. Filler plug

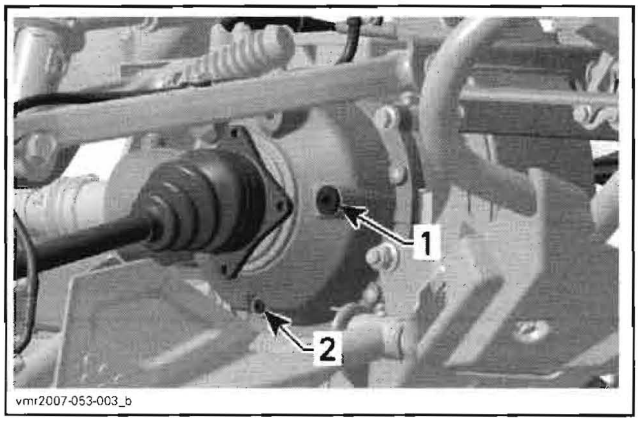

RENEGADE MODELS
1. Filler plug
2. Drain plug

With vehicle on a level surface, check oil level by removing filler plug **no. 8**. Oil level must reach the lower edge.

Add oil if necessary. Use XP-S synthetic gear oil (P/N 293 600 043) or a 75W90 synthetic oil (API GL-5).

Oil Change

Place vehicle on a level surface. Set transmission in park position.

Lift LH side of vehicle.

Clean drain plug area.

Place a drain pan under differential drain plug area.

Remove drain plug **no. 9**.

Unscrew filler plug.

Clean drain plug area then reinstall plug.

Lower vehicle.

Use a funnel and refill front differential with 500 mL (17 oz. US) of XP-S synthetic gear oil (P/N 293 600 043). If the XP-S synthetic gear oil is not available, use a 75W90 synthetic oil (API GL-5).

Reinstall filler plug.

Removal

Drain the differential.

Raise front of vehicle, support it securely on jack stands and remove front wheels.

On both sides, remove the drive shafts (refer to *FRONT DRIVE SHAFT* above).

Remove both upper suspension arms.

www.midwestmanuals.com
Sales@midwestmanuals.com

www.midwestmanuals.com

Remove bolts that attach winch bracket to the frame (**XT models**).

Remove the upper differential bolts.

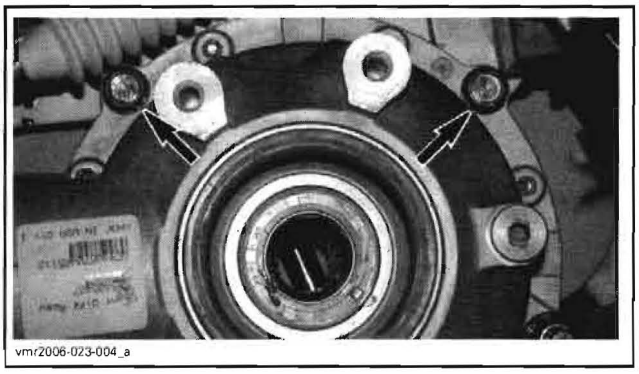
vmr2006-023-004_a

Remove the differential support bolts.

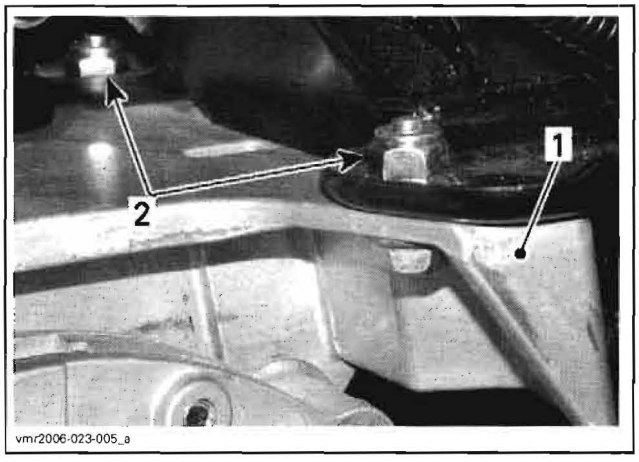

vmr2006-023-005_a

1. *Differential support*
2. *Differential support bolts*

Remove the lower differential bolts.

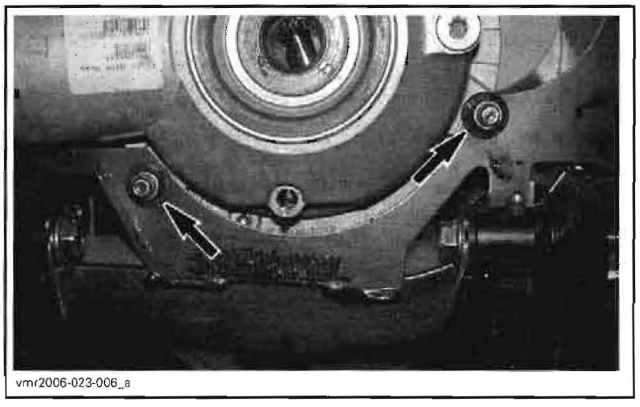
vmr2006-023-006_a

Remove the differential support, by the left side.

Remove the Oetiker clamp **no. 10** that attach propeller shaft bellows **no. 14** to the propeller shaft adaptor **no. 13**.

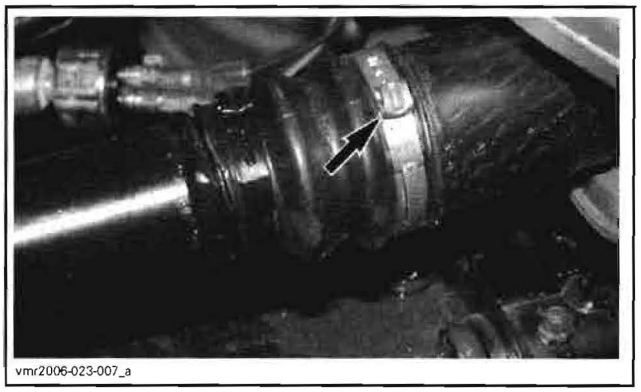
vmr2006-023-007_a

Remove the differential **no. 3** from the right side of vehicle.

Inspection

Check backlash and drag torque, see *ADJUSTMENT* further in this section.

Check if oil seals are brittle, hard or damaged. Replace if necessary.

Disassembly

Ring Gear Carrier/Ring Gear

Unscrew the TORX screws **no. 17**, then separate half housings.

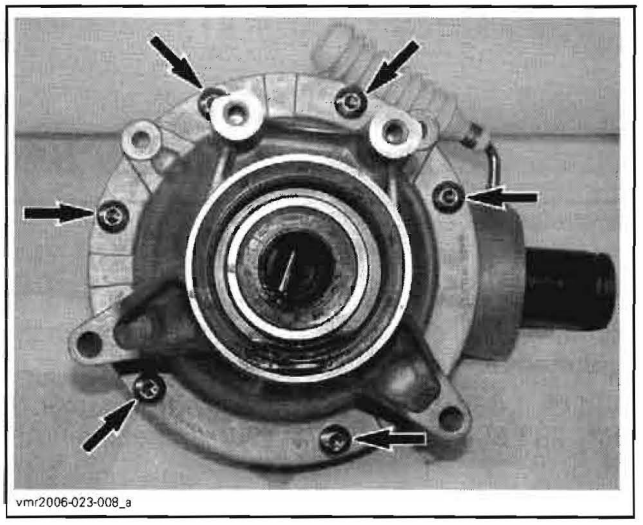
vmr2006-023-008_a

NOTE: Be careful to keep track of shims on each end of ring gear carrier.

Extract ring gear carrier **no. 15** with ring gear **no. 16** out of half housing.

Unscrew Allen socket screws **no. 18** then separate ring gear from ring gear carrier.

Pinion Gear

Remove oil seal **no. 19**.

Unscrew the pinion nut **no. 20**. Use the differential spanner socket (P/N 529 035 649).

www.midwestmanuals.com
Sales@midwestmanuals.com

www.midwestmanuals.com

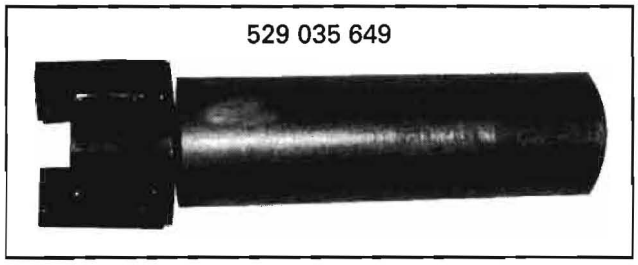

Remove the bearing **no. 21** at the same time as the pinion gear **no. 22**. Be careful to keep track of shims.

NOTE: The pinion gear and bearing can be easily removed using the following suggested tool:
- pipe 3-1/2 in diameter x 5 in (1)
- screwed rod M10 x 1.25, 7 in length (1)
- nut M10 x 1.25 (3)
- flat bar (1).

Adjustment

A shimming procedure must be done when ring gear carrier, pinion gear, ring gear or housing is (are) changed.

Measure the old pinion shim stack. If the shims measure over 1 mm (.039 in), install shim stacks on the differential components as per CHART "A".

If the old pinion shim stack measurement is under 1 mm (.039 in), install a .5 mm (.02 in) shim on the differential components as per CHART "B".

CHART "A"		CHART "B"	
PINION	1.85 mm (.073 in)	PINION	.5 mm (.02 in)
BACKLASH	1 mm (.039 in)	BACKLASH	
PRELOAD		PRELOAD	

NOTE: The procedure above sets the pinion shim thickness and should not be modified thereafter. Any changes should be done on the preload and/or backlash side(s).

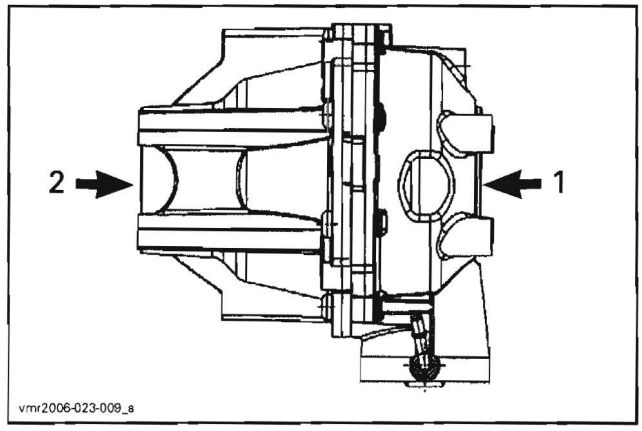

1. Backlash side
2. Preload side

Assemble the differential and check backlash as well as preload.

Backlash

Using a dial indicator and the backlash measurement tool (P/N 529 035 665), measure the backlash. Place the backlash measurement tool at the end of pinion gear.

From center of bolt, measure 25.4 mm (1 in) and scribe a mark on the tab.

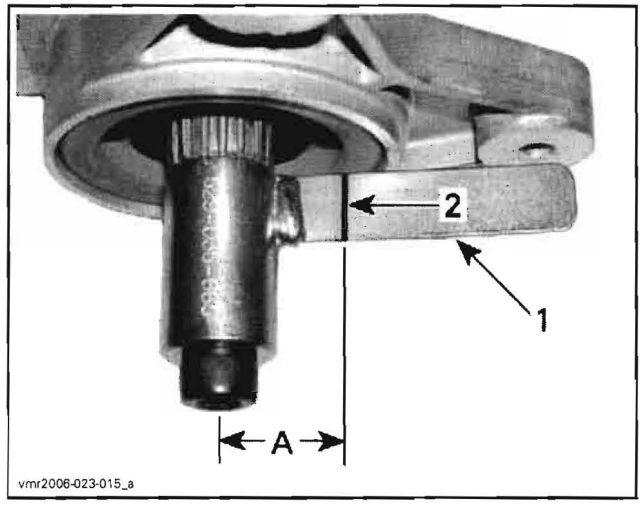

1. Tab of backlash measurement tool
2. Mark on tab
A. 25.4 mm (1 in)

Position the dial indicator tip against the tab at a 90° angle and right on the previously scribed mark.

Gently, move the tab back and forth. Note the result.

www.midwestmanuals.com
Sales@midwestmanuals.com

www.midwestmanuals.com

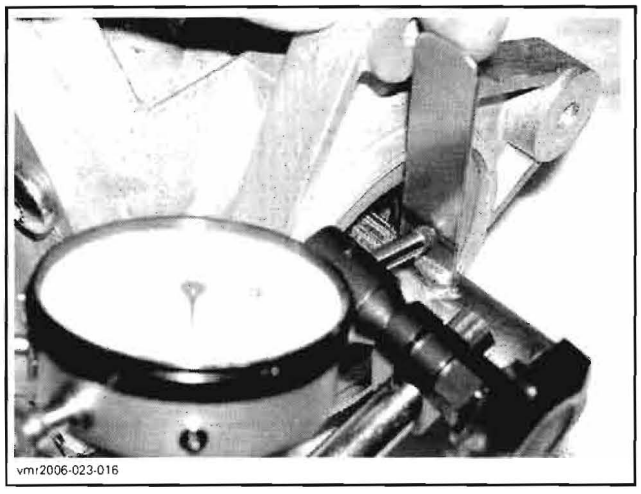
vmr2006-023-016

Rotate pinion gear 1/2 turn and check backlash again. Note the result.

Rotate pinion gear 1 turn and check backlash again.

If backlash is below 0.05 mm (.002 in), increase backlash shim by 0.05 mm (.002 in) and check the backlash again.

If backlash is greater than 0.356 mm (.014 in), decrease backlash shim by 0.05 mm (.002 in) and check the backlash again.

Measure preload.

Preload

Screw the propeller shaft adaptor bolt **no. 12** in pinion gear.

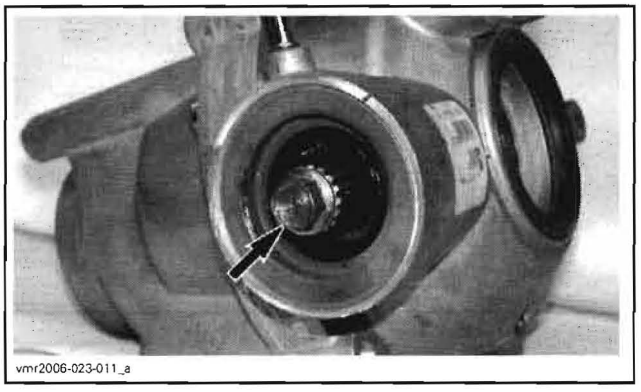
vmr2006-023-011_a

TYPICAL

Using a needle torque wrench, measure the drag torque.

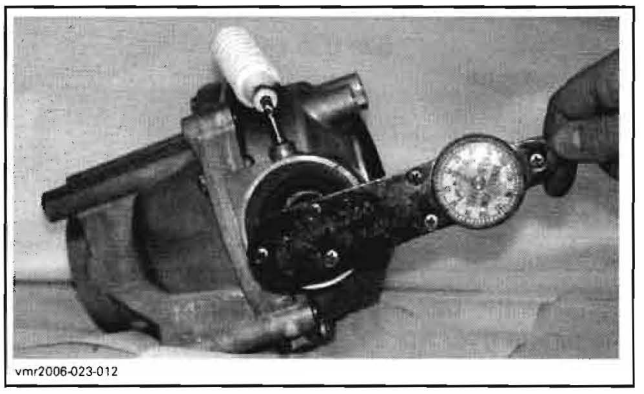
vmr2006-023-012

TYPICAL

If the drag torque is greater than 0.7 N•m (6 lbf•**in**), reduce preload shim by 0.05 mm (.002 in) and check drag torque again.

If the drag torque is less than 0.06 N•m (.5 lbf•**in**), increase preload shim by 0.05 mm (.002 in) and check drag torque again.

Assembly

Ring Gear Carrier/Ring Gear

To assemble, reverse the removal procedure. Pay attention to the following details.

Verify condition of half housing seal **no. 23**. Change seal if necessary.

Check all bearings and all oil seals. Change them if necessary.

Pinion Gear

To install, reverse the removal procedure. Pay attention to the following details.

Check O-ring **no. 24** for damage. If so, change it.

Install the shim(s) then the ball bearing.

Install the nut **no. 20**. Apply Loctite 277 (P/N 293 800 073) on threads nut then torque it to 180 N•m (133 lbf•ft).

Apply XP-S synthetic grease (P/N 293 550 010) in the lips of the new oil seal **no. 19** and install it.

Installation

The installation is the reverse of the removal procedure.

FRONT PROPELLER SHAFT

Removal

Place vehicle on PARK position and select 4WD.

Remove the RH footrest.

Unscrew propeller shaft bolt on engine side.

www.midwestmanuals.com
Sales@midwestmanuals.com

www.midwestmanuals.com

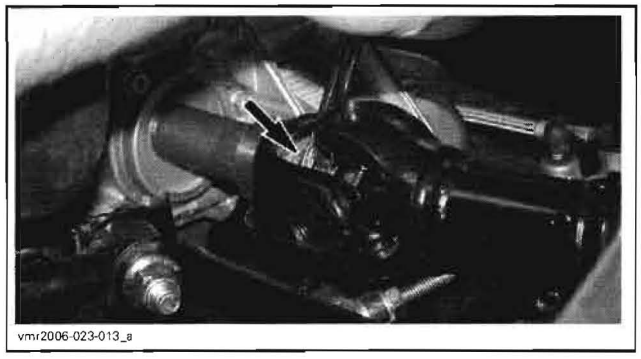

Remove the Oetiker clamp **no. 10** that attach propeller shaft bellows **no. 14** to the propeller shaft adaptor **no. 13**. Discard clamp.

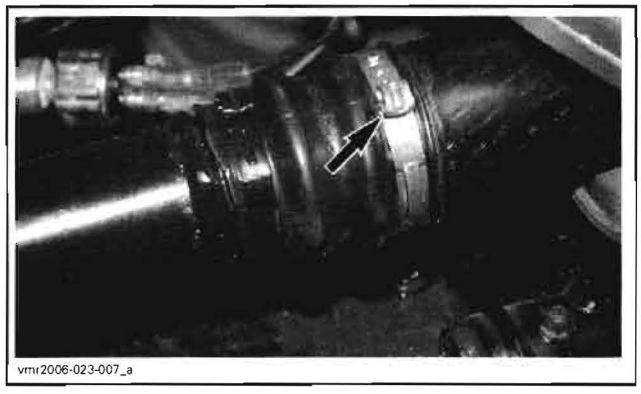

Remove LH drive shaft.

Unscrew lower and upper differential bolts.

Remove them and move the differential forwards.

Remove front propeller shaft **no. 11**.

Inspection

Check:
- splines for wear or damage
- if U-joint moves freely in all direction
- bellows for holes or brittleness.

Installation

Installation is the reverse of removal procedure.

PROPELLER SHAFT U-JOINT

Removal

Remove internal snap ring from bearing caps.

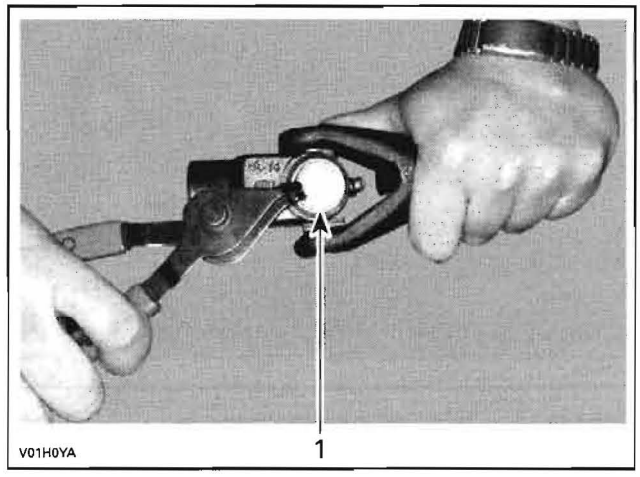

1. Snap ring

Support inner yoke in vice and drive other yoke down with a soft hammer.

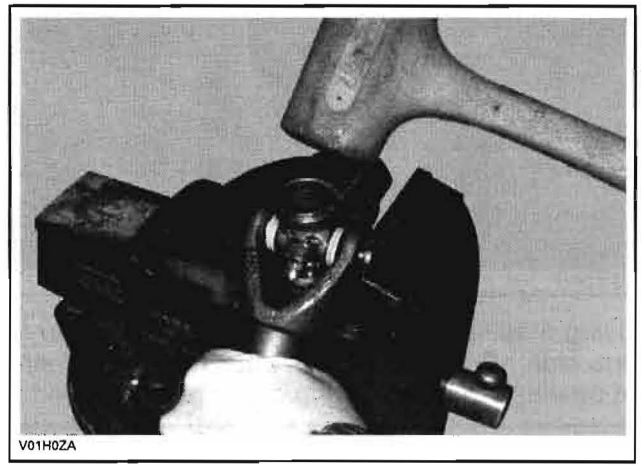

Support U-joint in vice and drive inner yoke down to remove remaining bearing caps.

Remove U-joint cross.

Installation

Install new U-joint cross in inner yoke.

Install new bearing cap by hand.

NOTE: Carefully install U-joint cross with grease fitting properly positioned.

www.midwestmanuals.com
Sales@midwestmanuals.com

www.midwestmanuals.com

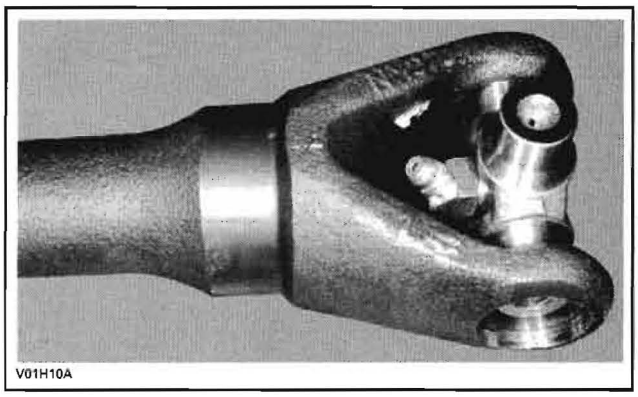
V01H10A

Tighten vise to force bearing caps in.

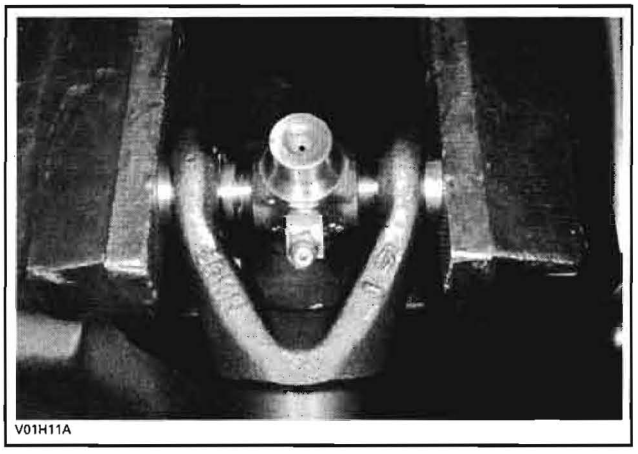
V01H11A

Using a suitable tappet, fully seat bearing cap in one side. Continually, check for free movement of bearing cross as bearing caps are assembled.

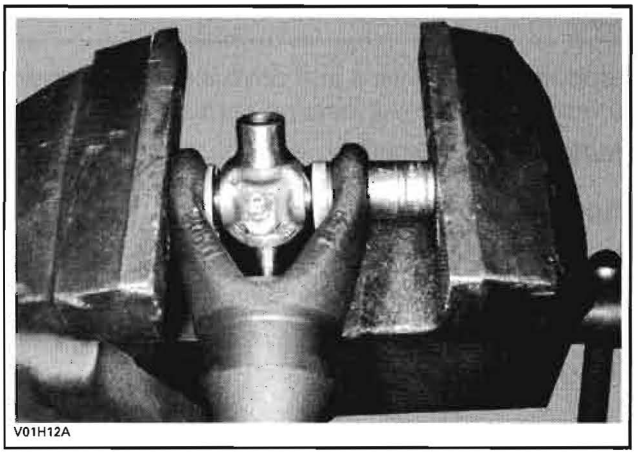
V01H12A

Install snap ring.

Repeat procedure for other sides.

Grease U-joint, using a grease gun with XP-S synthetic grease (P/N 293 550 010).

www.midwestmanuals.com
Sales@midwestmanuals.com

www.midwestmanuals.com

REAR DRIVE

SERVICE TOOLS

Description	Part Number	Page
CV boot clamp pliers	295 000 069	323
pliers Oetiker 1099	295 000 070	323
differential spanner socket	529 035 649	327
backlash measurement tool	529 035 665	328

SERVICE PRODUCTS

Description	Part Number	Page
XP-S synthetic grease	293 550 010	322, 325–326, 329
XP-S synthetic gear oil	293 600 043	326
Loctite 277	293 800 073	329

www.midwestmanuals.com
Sales@midwestmanuals.com

www.midwestmanuals.com

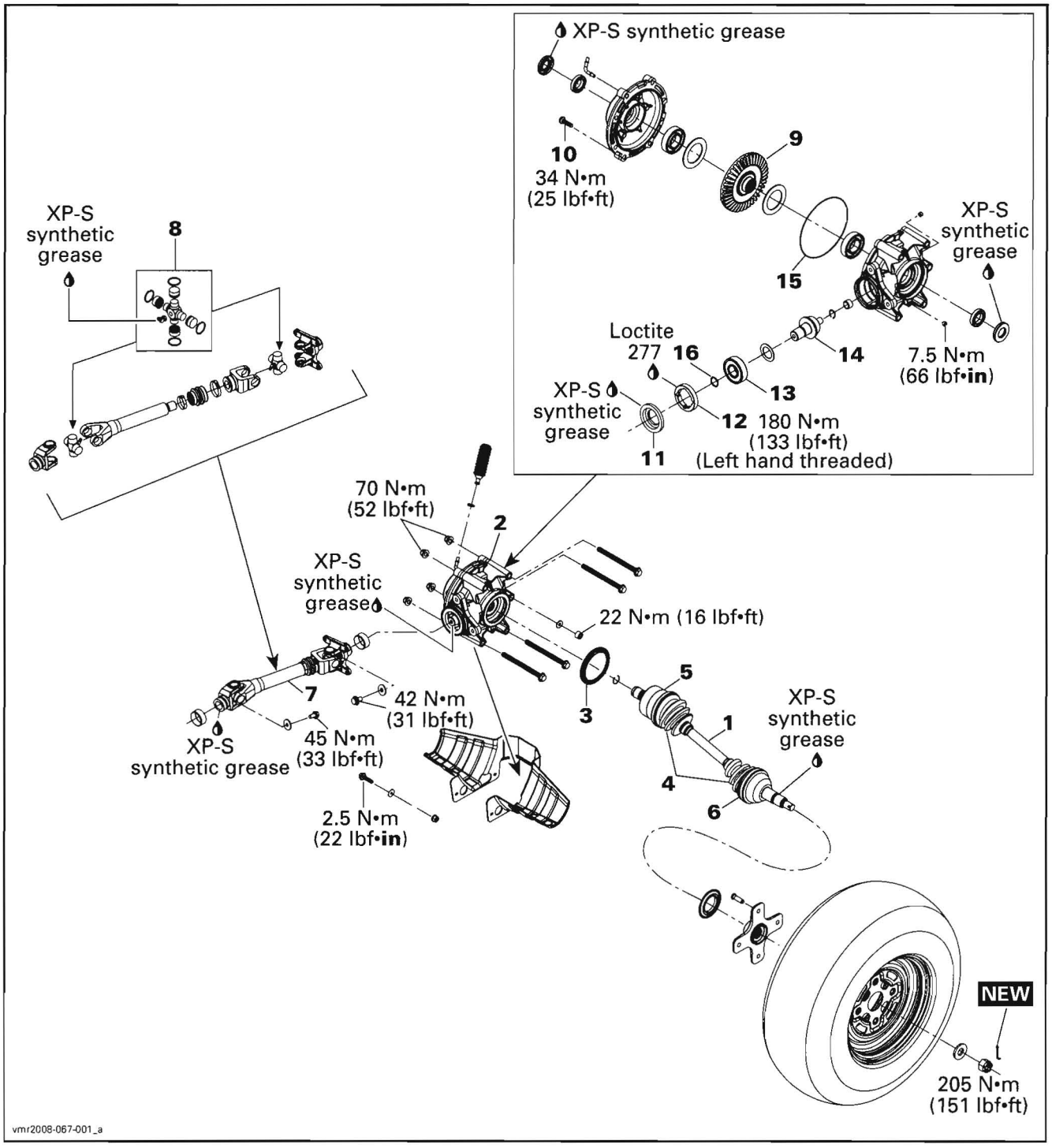

www.midwestmanuals.com
Sales@midwestmanuals.com

www.midwestmanuals.com

GENERAL

During assembly/installation, use torque values and service products as in the exploded views.

Clean threads before applying a threadlocker. Refer to *SELF-LOCKING FASTENERS* and *LOCTITE APPLICATION* at the beginning of this manual for complete procedure.

⚠ WARNING

Torque wrench tightening specifications must strictly be adhered to.
Locking devices (e.g.: locking tabs, elastic stop nuts, cotter pins, etc.) must be replaced with new ones.

PROCEDURES

TIRES AND WHEELS

⚠ WARNING

When the tires are replaced, never install a bias tire with a radial tire. Such a combination could create handling and/or stability problems.
Do not mix tires of different size and/or design on the same axle.
Front and rear tire pairs must be the identical model and manufacturer.
For unidirectional tread pattern, ensure that the tires are installed in the correct direction of rotation.
The radial tires must be installed as a complete set.
Severe injury or death can result if these instructions are not followed.

The tires are directional and their rotation must be kept in a specific direction for proper operation.

Using the next table, torque wheel nuts in accordance with the following illustration.

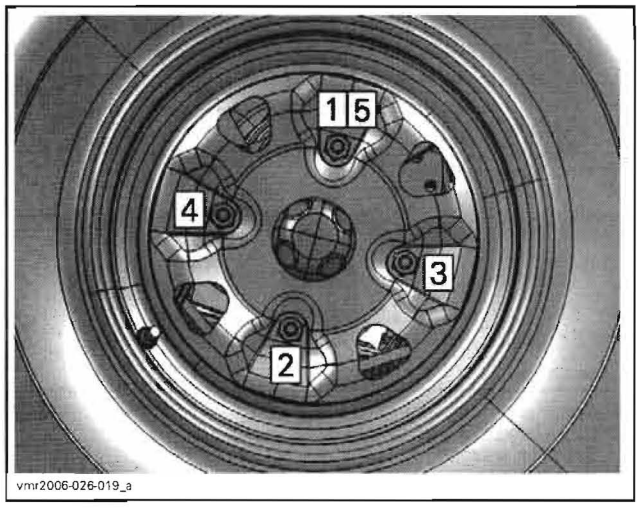

vmr2006-026-019_a

CAUTION: Always use the recommended wheel nuts. Using a different nut could cause damages to the rim.

WHEEL NUT TORQUE	
All steel wheels	70 N•m (52 lbf•ft)
All aluminum wheels (except for Outlander MAX 800 Ltd)	100 N•m (74 lbf•ft)
Outlander MAX 800 Ltd (BLACK aluminum wheels)	70 N•m (52 lbf•ft)

Outlander 650/800 Series and Renegade Models

On these models, wheel balancing is necessary. To perform this operation, use a wheel balancer and adhesive weights.

WHEEL HUB

Wheel Hub Removal

Remove the appropriate wheel.

Remove and discard the cotter pin.

Unscrew the castellated nut.

Remove the Belleville washer.

Pull wheel hub to remove it.

www.midwestmanuals.com
Sales@midwestmanuals.com

www.midwestmanuals.com

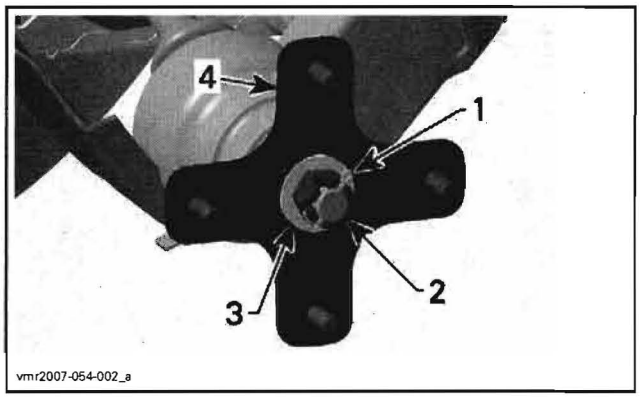

1. *Cotter pin*
2. *Castellated nut*
3. *Belleville washer*
4. *Wheel hub*

Wheel Hub Inspection

Check wheel hub for cracks or other damages.

Check inner splines for wear or other damages.

If any damage is detected on wheel hub, replace it with a new one.

Check wear ring. If it is loose on hub, replace the wear ring.

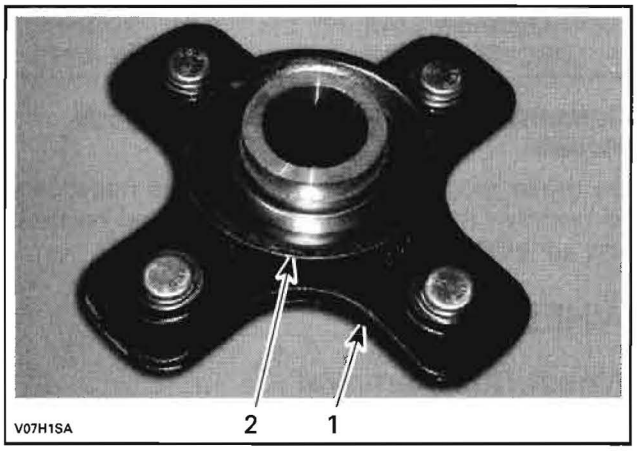

1. *Wheel hub*
2. *Wear ring*

Wheel Hub Installation

The installation is the reverse of removal procedure. Pay attention to the following.

Apply XP-S synthetic grease (P/N 293 550 010) on drive shaft splines.

Install Belleville washer in correct orientation. Inside diameter must protrude outward.

Torque castellated nut to 205 N•m (151 lbf•ft) and further tighten until one of its grooves is aligned with a cotter pin hole. Install a **NEW** cotter pin. Fold one pin of cotter pin over drive shaft end.

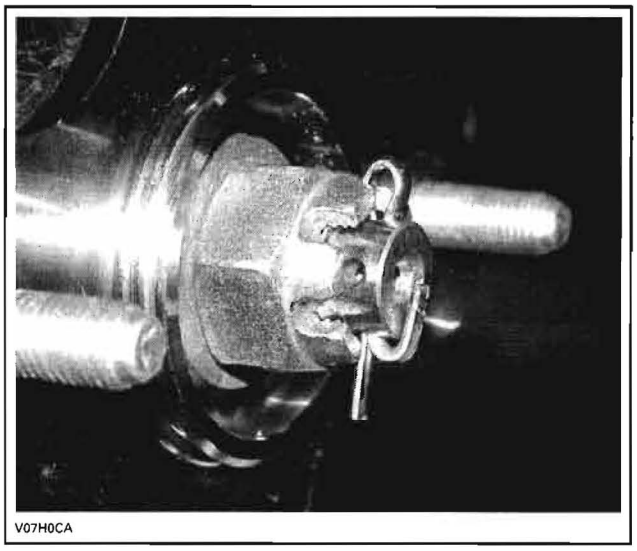

DIFFERENTIAL PROTECTOR

Differential Protector Removal

Remove bolts retaining the protector to the frame.

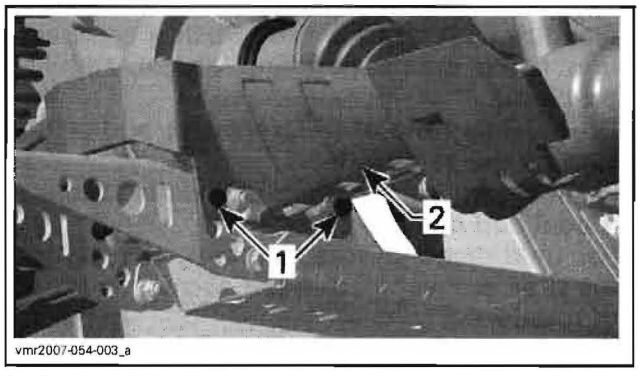

1. *Protector bolts*
2. *Differential protector*

Differential Protector Installation

The installation is the reverse of removal procedure.

DRIVE SHAFT

Drive Shaft Removal

Remove the appropriate wheel hub and the footrest on this side.

Remove the lower shock absorber bolt.

Remove trailing arm. Refer to *REAR SUSPENSION*.

Pull drive shaft **no. 1** out of differential **no. 2**.

NOTE: Pull drive shaft strongly.

www.midwestmanuals.com
Sales@midwestmanuals.com

www.midwestmanuals.com

Drive Shaft Inspection

Inspect the condition of boots. If there is any damage or evidence of leaking lubricant, replace them. Refer to *DRIVE SHAFT BOOT*.

Check shaft splines. Replace drive shaft if necessary.

Check wear ring **no. 3** on drive shaft end. Replace if necessary.

Drive Shaft Installation

Insert the end of drive shaft in differential and pull joint a little to make sure that the stop ring is locked in differential gear groove.

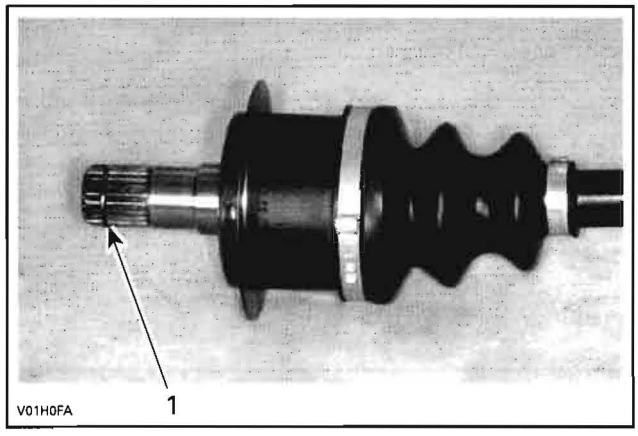

1. Stop ring

NOTE: Make sure do not interchange LH and RH drive shafts. The shafts are different lengths.

Install the other parts in the reverse order of removal procedure. Refer to the appropriate sections to apply the proper torque.

DRIVE SHAFT BOOT

Boot Removal

Remove the drive shaft from vehicle.

Remove the clamps from rubber boot **no. 4** using CV boot clamp pliers (P/N 295 000 069) and pliers Oetiker 1099 (P/N 295 000 070).

Remove the large end of the boot from plunging joint **no. 5** or CV joint **no. 6**.

Move apart circlip and pull out the shaft from bearing. Do not remove circlip.

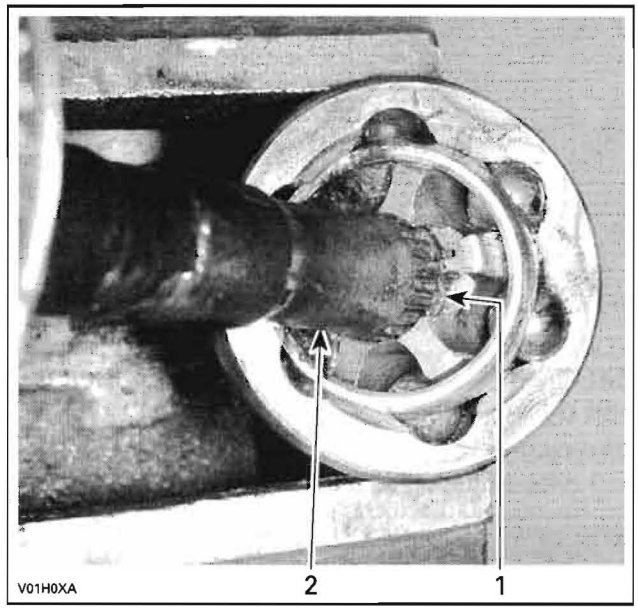

1. Circlip
2. Shaft

Remove boot from drive shaft.

Boot Inspection

Check bearing in plunging joint **no. 5** or CV joint **no. 6**. If bearing is hard to move, change plunging joint or CV joint.

Check circlip for damage, change as necessary.

Boot Installation

For installation, reverse the removal procedure. Pay attention to the following details.

Insert boot, do not forget the small clamp.

Insert shaft and push firmly.

Pack bearing area with grease (including with the new boot kit).

NOTE: Do not use any other grease.

Install all other removed parts.

REAR PROPELLER SHAFT

Propeller Shaft Removal

Install a jack stand to support the vehicle during the procedure.

Remove rear wheels.

Remove caliper screws and suspend caliper out of the way.

www.midwestmanuals.com
Sales@midwestmanuals.com

www.midwestmanuals.com

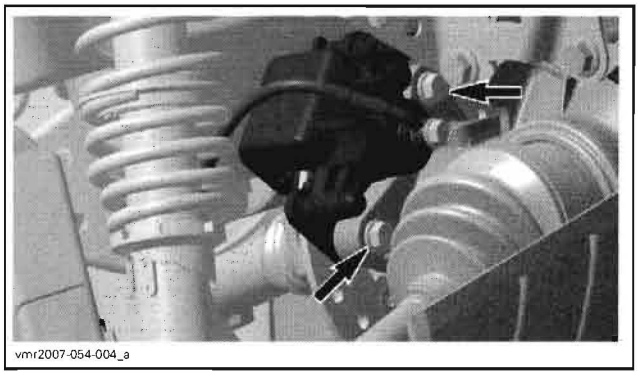
vmr2007-054-004_a

CAUTION: Do not let caliper hang by the hose and do not stretch or twist hose.

Unscrew the rear propeller shaft screws (engine and differential sides).

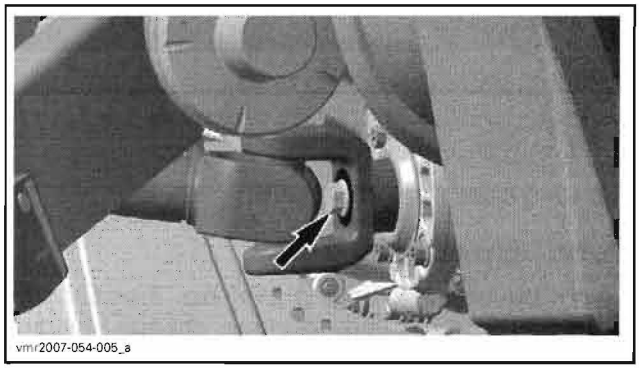
vmr2007-054-005_a

ENGINE SIDE

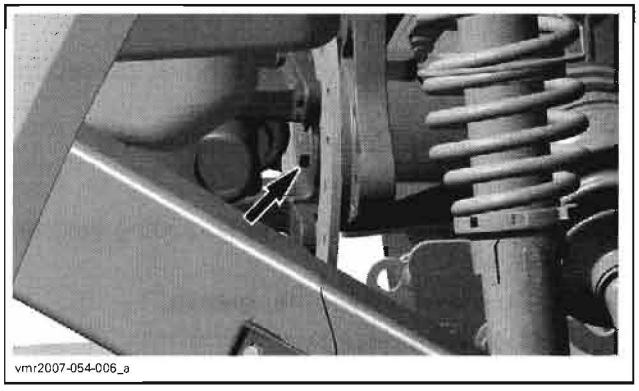
vmr2007-054-006_a

DIFFERENTIAL SIDE

NOTE: The propeller shaft bolts are different, they must be reinstalled in same location.

Remove the differential protector.

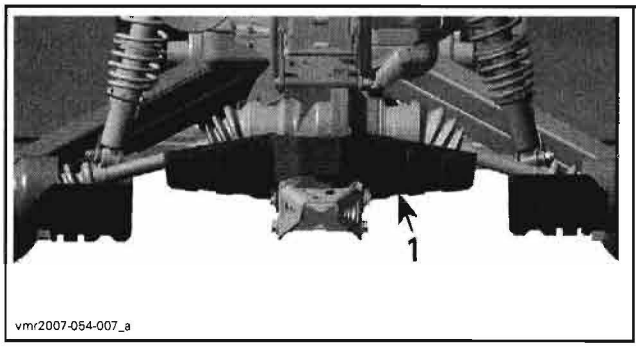

vmr2007-054-007_a

1. Differential protector

Unscrew and remove lower and upper differential bolts.

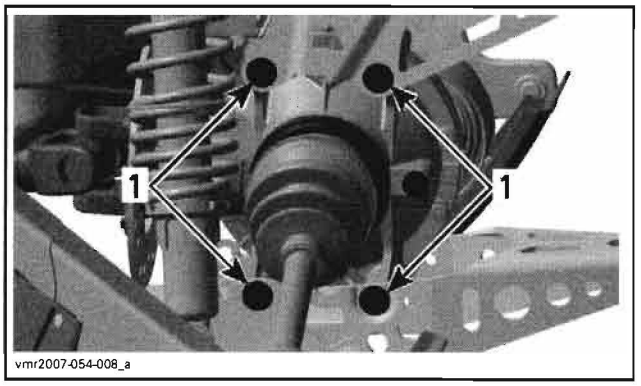

vmr2007-054-008_a

1. Differential bolts

Loosen hitch plate bolts.

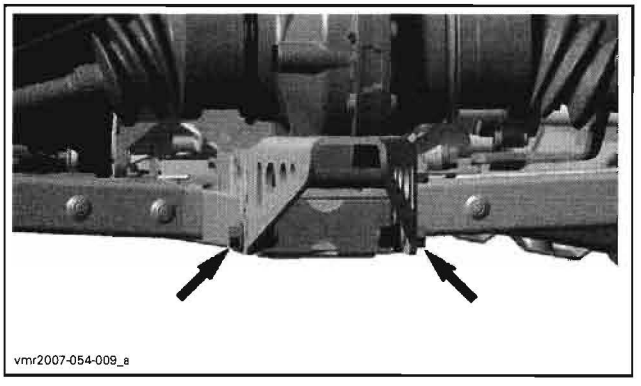
vmr2007-054-009_a

Move the differential **no. 2** backward.

Unplug the propeller shaft **no. 7** from the differential then remove it from vehicle.

Propeller Shaft Inspection

Check yoke U-joint **no. 8** for wear, backlash or axial play, replace if necessary.

Inspect engine seal for damage or leaks. Replace if necessary.

Inspect brake disc (refer to *HYDRAULIC BRAKES*).

www.midwestmanuals.com
Sales@midwestmanuals.com

www.midwestmanuals.com

Propeller Shaft Installation

Installation is essentially the reverse of removal procedure. Pay attention to the following details.

Apply XP-S synthetic grease (P/N 293 550 010) on engine drive shaft splines.

Install the propeller shaft screw (engine side) and torque it to 45 N•m (33 lbf•ft).

Apply XP-S synthetic grease (P/N 293 550 010) to splines before insert the end of the propeller shaft into differential. Torque propeller shaft screw to 34 N•m (25 lbf•ft).

Reinstall all other removed parts.

Grease U-joint from rear propeller shaft. Use a grease gun with XP-S synthetic grease (P/N 293 550 010).

REAR PROPELLER SHAFT U-JOINT

Remove the brake disc before working on differential side of propeller shaft.

U-Joint Removal

Remove internal snap ring from bearing caps.

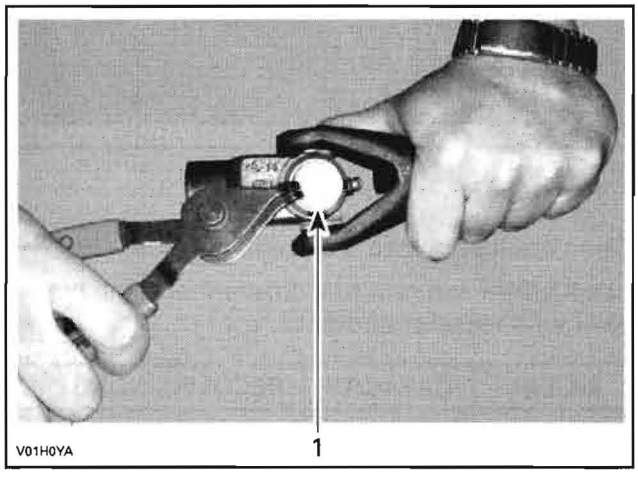

1. Snap ring

Support inner yoke in vice and drive other yoke down with a soft hammer.

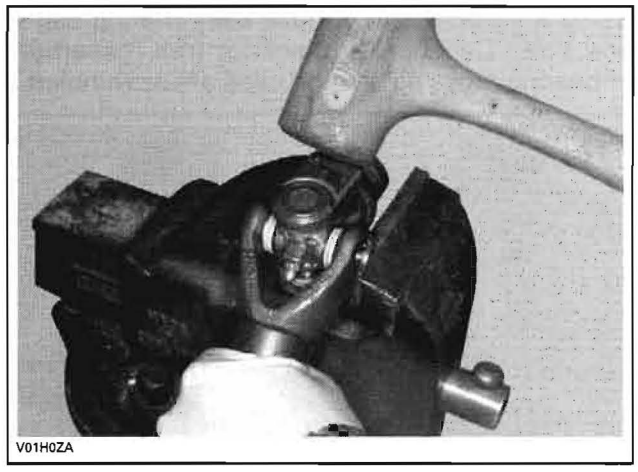

Support U-joint in vice and drive inner yoke down to remove remaining bearing caps.

Remove U-joint cross.

U-Joint Installation

Install new U-joint cross in inner yoke.

Install new bearing cap by hand.

NOTE: Carefully install U-joint cross with grease fitting properly positioned.

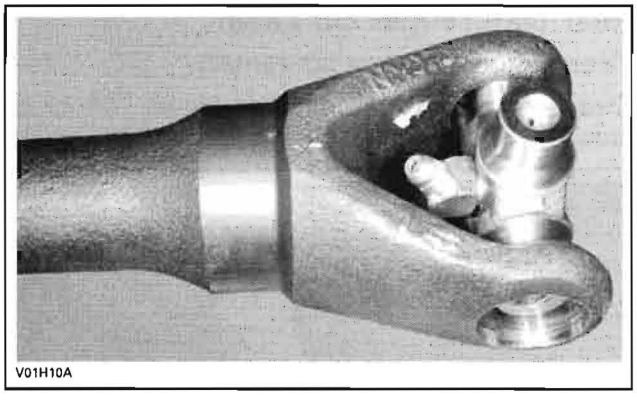

Tighten vise to force bearing caps in.

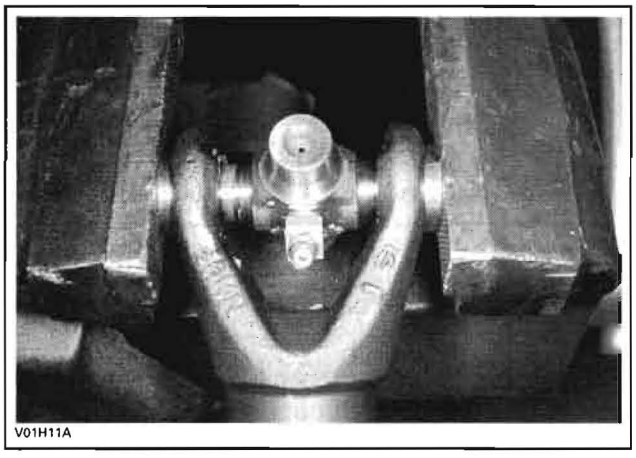

www.midwestmanuals.com
Sales@midwestmanuals.com

www.midwestmanuals.com

Using a suitable tappet, fully seat bearing cap in one side. Continually, check for free movement of bearing cross as bearing caps are assembled.

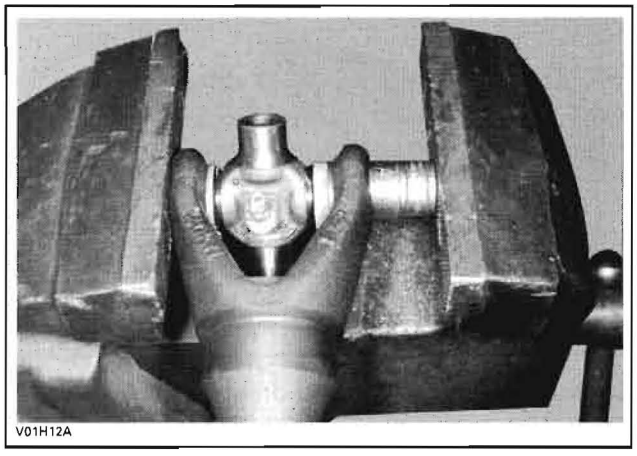
V01H12A

Install snap ring.

Repeat procedure for other sides.

Grease U-joint, using a grease gun with XP-S synthetic grease (P/N 293 550 010).

REAR DIFFERENTIAL

Rear Differential Oil Level

Place bottom of frame horizontally.

Clean filler plug prior to check oil level. Check oil level by removing filler plug.

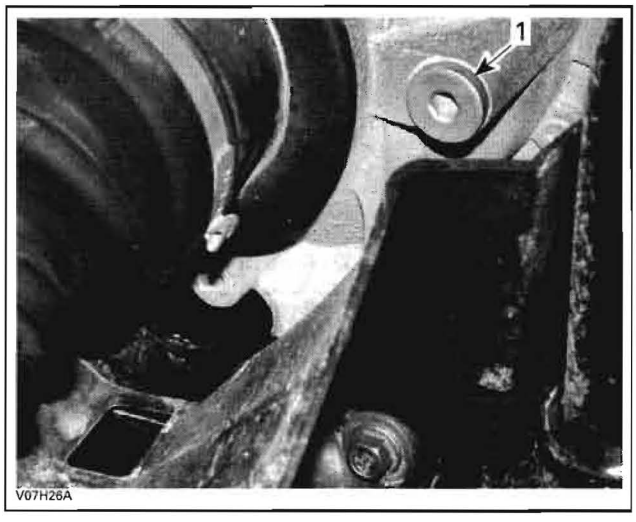

V07H26A

1. Filler plug

The rear differential oil is not level with the filler plug threads.

It is possible to verify the oil level by inserting a wire with a 90° bend through the oil filler hole.

Oil level is between 25 to 32 mm (1 to 1-1/4 in) from the bottom of oil filler plug threads when the vehicle is level on ground.

When replacing the oil in the differential, it is easier to measure the right quantity of oil to add in order to reach the proper level. Refer to *OIL REPLACEMENT.*

Add oil if necessary.

Rear Differential Oil Replacement

Ensure vehicle is on a level surface.

Clean drain plug area.

Place a drain pan under rear differential drain plug area.

Unscrew filler plug.

Remove drain plug.

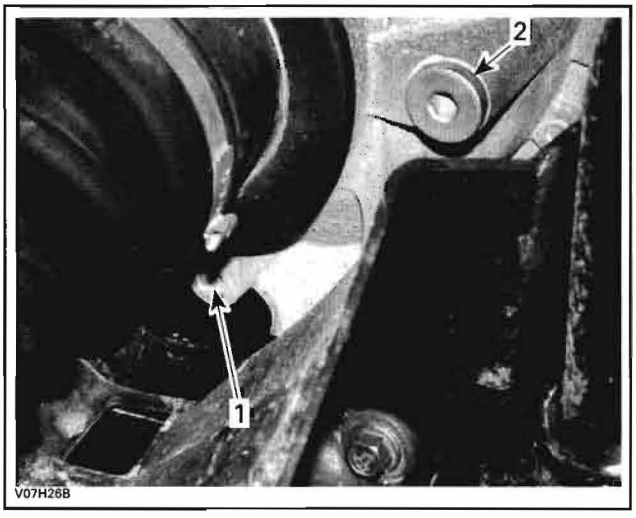

V07H26B

1. Drain plug
2. Filler plug

Clean drain plug area then reinstall drain plug.

Use a funnel and refill rear differential at the proper level with recommended oil.

MODEL	CAPACITY	RECOMMENDED OIL
All models	250 mL (8.5 U.S. oz)	XP-S synthetic gear oil (P/N 293 600 043) or REDLINE pump oil 75W90 (API GL5)

Reinstall filler plug.

Rear Differential Removal

Install a jack stand under differential to support the vehicle during the following procedure.

Remove rear wheels.

Remove both trailing arms. Refer to *REAR SUSPENSION.*

Remove both drive shafts.

Remove the differential protector.

www.midwestmanuals.com
Sales@midwestmanuals.com

www.midwestmanuals.com

Unscrew and remove lower and upper differential bolts.

Remove the propeller shaft screw and its washer (differential side).

Remove the differential **no. 2**.

Rear Differential Inspection

Turn rear differential gear with a finger; it should turn smoothly. Replace if necessary.

Check backlash and drag torque, see *ADJUSTMENT* further in this section.

Check if oil seals are brittle, hard or damaged. Replace if necessary.

Rear Differential Disassembly

Ring Gear

Unscrew the TORX screws **no. 10**, then separate half housings.

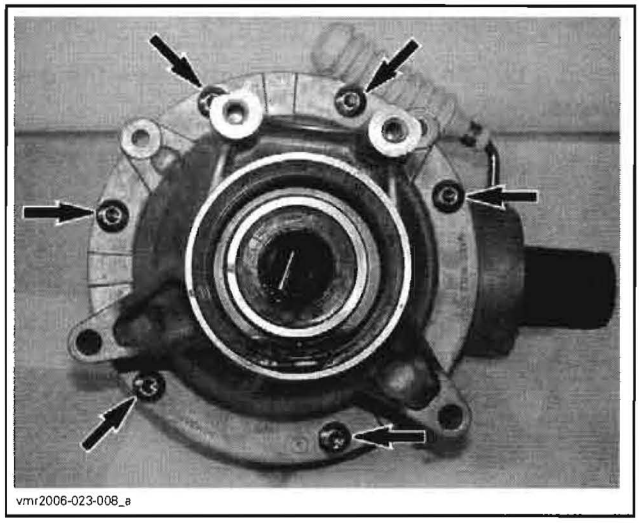

TYPICAL — FRONT DIFFERENTIAL SHOWN

NOTE: Be careful to keep track of shims on each end of ring gear **no. 9**.

Extract ring gear out of half housing.

Pinion Gear

Remove oil seal **no. 11**.

Unscrew the pinion nut **no. 12**. Use the differential spanner socket (P/N 529 035 649).

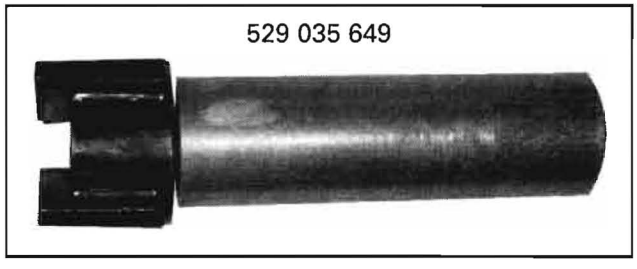

CAUTION: The pinion nut is left hand threaded. Unscrew by turning clockwise.

Remove the bearing **no. 13** at the same time as the pinion gear **no. 14**. Be careful to keep track of shims.

NOTE: The pinion gear and bearing can be easily removed using the following suggested tool:

- pipe 3-1/2 in diameter x 5 in (1)
- screwed rod M10 x 1.25, 7 in length (1)
- nut M10 x 1.25 (3)
- flat bar (1).

Rear Differential Adjustment

A shimming procedure must be done when pinion gear, ring gear or housing is (are) changed.

Measure the old pinion shim stack. If the shims measure over 1 mm (.039 in), install shim stacks on the differential components as per CHART "A".

If the old pinion shim stack measurement is under 1 mm (.039 in), install a .5 mm (.02 in) shim on the differential components as per CHART "B".

CHART "A"		CHART "B"	
PINION	2.18 mm (.086 in)	PINION	.5 mm (.02 in)
BACKLASH	.94 mm (.037 in)	BACKLASH	
PRELOAD	1.37 mm (.054 in)	PRELOAD	

NOTE: The procedure above sets the pinion shim thickness and should not be modified thereafter. Any changes should be done on preload and/or backlash side(s).

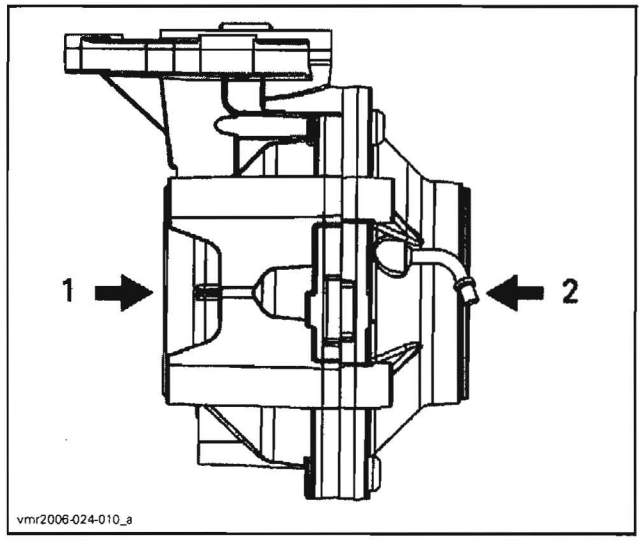

1. *Backlash side*
2. *Preload side*

www.midwestmanuals.com
Sales@midwestmanuals.com

www.midwestmanuals.com

Assemble the differential.

Backlash

Using a dial indicator and the backlash measurement tool (P/N 529 035 665), measure the backlash. Place the backlash measurement tool at the end of pinion gear.

From center of bolt, measure 25.4 mm (1 in) and scribe a mark on the tab.

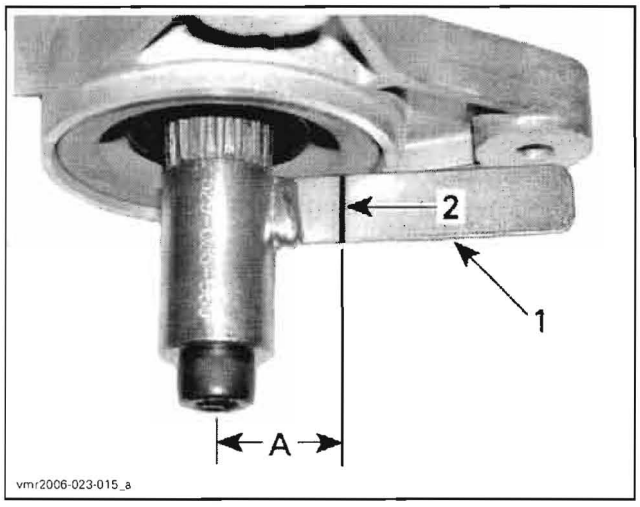

1. *Tab of backlash measurement tool*
2. *Mark on tab*

A. 25.4 mm (1 in)

Position the dial indicator tip against the tab at a 90° angle and right on the previously scribed mark.

Gently, move the tab back and forth. Note the result.

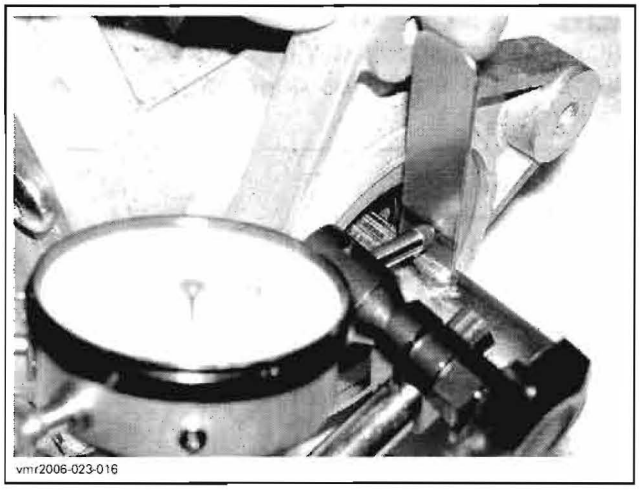

Rotate pinion gear 1/2 turn and check backlash again. Note the result.

Rotate pinion gear 1 turn and check backlash again.

If backlash is below 0.05 mm (.002 in), increase backlash shim by 0.05 mm (.002 in) and check the backlash again.

If backlash is greater than 0.356 mm (.014 in), decrease backlash shim by 0.05 mm (.002 in) and check the backlash again.

Measure preload.

Preload

Screw the propeller shaft adaptor bolt in pinion gear.

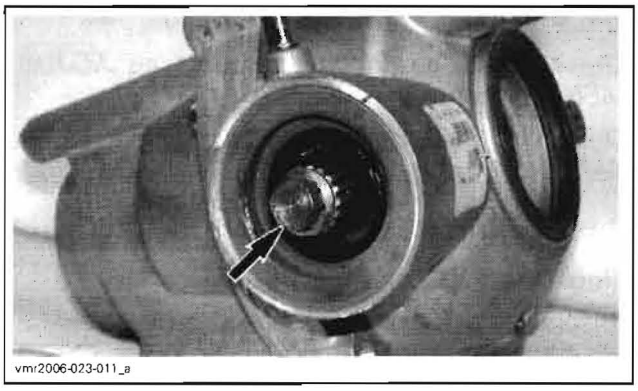

TYPICAL — FRONT DIFFERENTIAL SHOWN

Using a needle torque wrench, measure the drag torque.

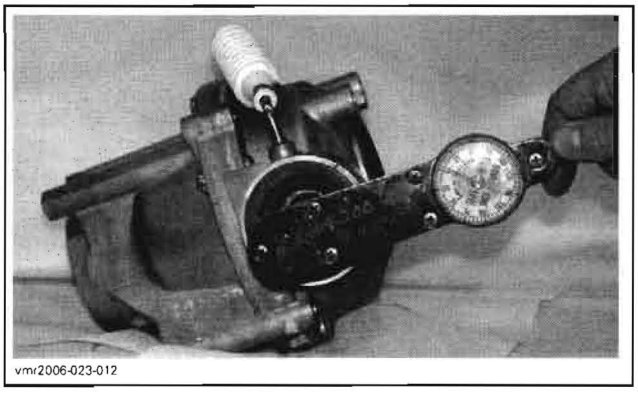

TYPICAL — FRONT DIFFERENTIAL SHOWN

If the drag torque is greater than 0.7 N•m (6 lbf•**in**), reduce preload shim by 0.05 mm (.002 in) and check drag torque again.

If the drag torque is less than 0.06 N•m (.5 lbf•**in**), increase preload shim by 0.05 mm (.002 in) and check drag torque again.

Rear Differential Assembly

Ring Gear

To assemble, reverse the removal procedure. Pay attention to the following details.

Verify condition of half housing seal **no. 15**. Change seal if necessary.

Check all bearings and all oil seals. Change them if necessary.

www.midwestmanuals.com
Sales@midwestmanuals.com

www.midwestmanuals.com

Pinion Gear

To install, reverse the removal procedure. Pay attention to the following details.

Check O-ring **no. 16** for damage. If so, change it.

Install the shim then the ball bearing.

Install the nut **no. 12**. Apply Loctite 277 (P/N 293 800 073) on threads nut then torque it to 180 N•m (133 lbf•ft).

Apply XP-S synthetic grease (P/N 293 550 010) in the lips of the new oil seal **no. 11** and install it.

Rear Differential Installation

The installation is the reverse of the removal procedure.

www.midwestmanuals.com
Sales@midwestmanuals.com



sales@midwestmanuals.com
www.midwestmanuals.com

www.midwestmanuals.com

STEERING SYSTEM

SERVICE TOOLS

Description	Part Number	Page
steering alignment tool	529 036 059	340

SERVICE TOOLS – OTHER SUPPLIER

Description	Part Number	Page
Smoothflow™ tapered tip	16 ga #511 rtt-b	333

SERVICE PRODUCTS

Description	Part Number	Page
Loctite 406 (glue)	293 800 100	333
pulley flange cleaner	413 711 809	333
XP-S synthetic grease	529 550 010	335

www.midwestmanuals.com
Sales@midwestmanuals.com

www.midwestmanuals.com

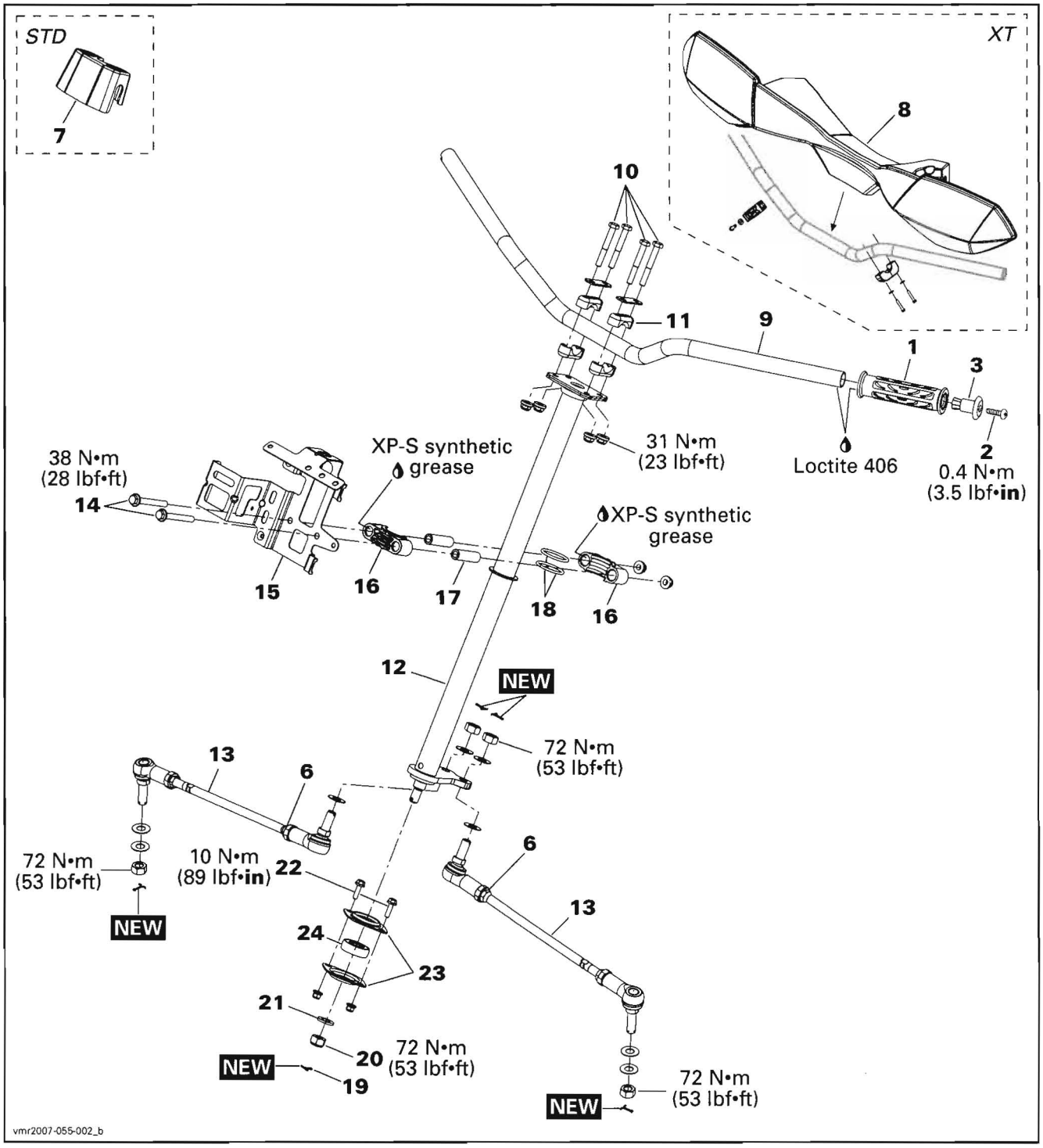

www.midwestmanuals.com
Sales@midwestmanuals.com

www.midwestmanuals.com

GENERAL

During assembly/installation, use the torque values and service products as in the exploded views.

Clean threads before applying a threadlocker. Refer to *SELF-LOCKING FASTENERS* and *LOCTITE APPLICATION* at the beginning of this manual for complete procedure.

⚠ WARNING

Torque wrench tightening specifications must strictly be adhered to.
Locking devices (e.g.: locking tabs, elastic stop nuts, cotter pins, etc.) must be replaced with new ones.

PROCEDURES

HANDLEBAR GRIP

Removal

Loosen the screw **no. 2** at the end of handlebar grip **no. 1**.

Remove the handlebar grip cap **no. 3**.

Cut and remove the handlebar grip.

Installation

Remove all rubber residues of the old grip before installing the new.

Clean the handlebar with pulley flange cleaner (P/N 413 711 809) or alcohol to remove any greasy matter on it.

Install handlebar grip by blowing compressed air between handle grip and handlebar.

Install a Smoothflow™ tapered tip (P/N 16 ga #511 rtt-b) from EFD Inc on a bottle of Loctite 406 (glue) (P/N 293 800 100).

Lift a part of the grip using a small screwdriver and inject glue (about 4 spots per side).

NOTE: The glue dries quickly. Do not apply it before installing grip.

Apply pressure on the grip for approximately 30 seconds to set the glue.

Install the handlebar grip cap and torque screw 0.4 N•m (3.5 lbf•**in**).

HANDLEBAR COVER

Removal

On **models without XT package**, just pull the handlebar cover **no. 7** to remove it.


vmr2006-025-004

On **XT models**, unscrew both plastic U-clamps that attach handlebar cover **no. 8** to the handlebar **no. 9**.

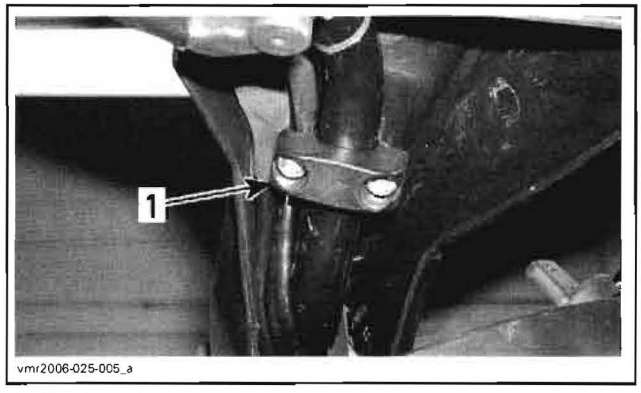

vmr2006-025-005_a

1. Plastic U-clamp

Inspection

Check covers for cracks or other damages. Replace if necessary.

Installation

The installation is the reverse of removal procedure.

HANDLEBAR

Removal

All Models except Renegade

Remove handlebar cover.

Remove handlebar grips **no. 1**.

Remove throttle and brake handles as well as multifunction switch (see below in this section).

www.midwestmanuals.com
Sales@midwestmanuals.com

www.midwestmanuals.com

NOTE: Remove handlebar grips, throttle handle, brake handle and multifunction switch only if the handlebar is defective and replace with a new.

Remove steering clamp mounting bolts **no. 10** and steering clamps **no. 11**.

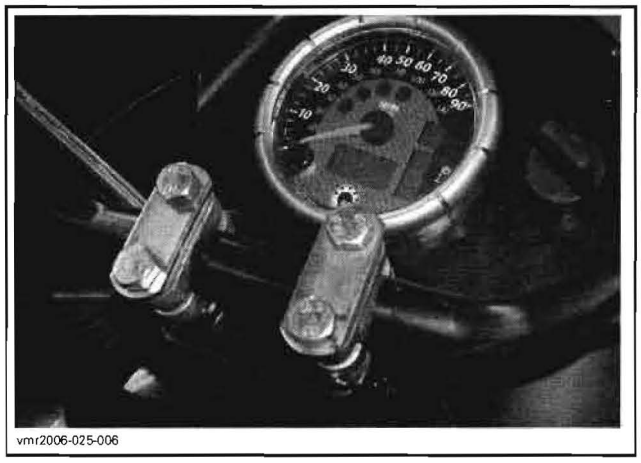
vmr2006-025-006

TYPICAL — OUTLANDER 800 SHOWN

Remove the handlebar **no. 9**.

Renegade Model

Remove handlebar grips, throttle and brake handles as well as multifunction switch.

NOTE: These items should be removed only if the handlebar is defective and/or replaced with a new.

Unscrew the four socket screws securing the moulded handlebar support.

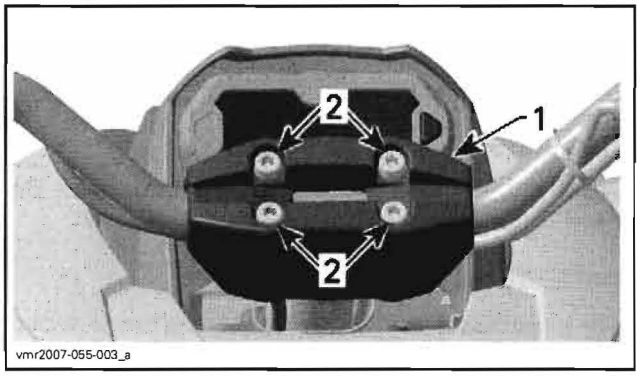

vmr2007-055-003_a

1. *Moulded handlebar support*
2. *Socket screws*

Remove handlebar.

Inspection

Inspect the handlebar for damage, cracks or bending, replace if any of these problems is detected.

Installation

For the installation, reverse the removal procedure.

STEERING COLUMN

Removal

Remove both footrests.

Remove central panel and dash board.

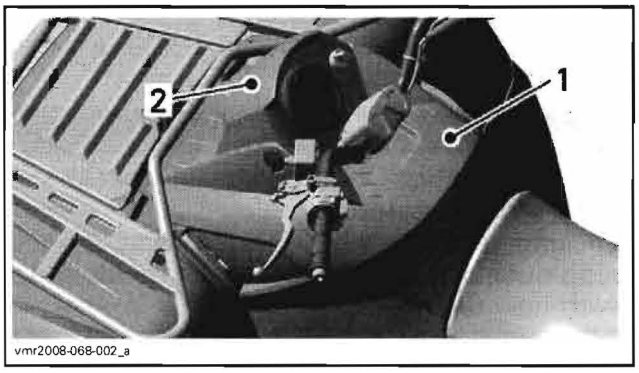

vmr2008-068-002_a

1. *Central panel*
2. *Dash board*

Remove the air intake silencer. Refer to *AIR INTAKE SYSTEM*.

Remove handlebar.

Remove the cotter pin (discard it), the elastic stop nut and the washer to bottom end of steering column.

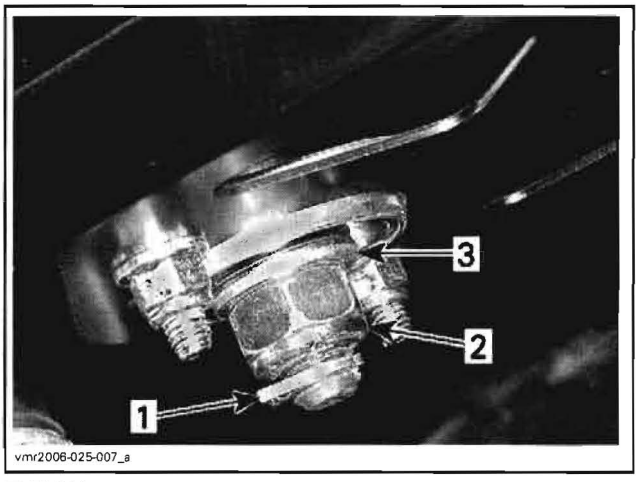

vmr2006-025-007_a

TYPICAL
1. *Cotter pin*
2. *Elastic nut*
3. *Washer*

Separate steering column **no. 12** and tie-rods **no. 13**. Refer to *TIE-ROD*, further in this section.

Remove half bushing bolts **no. 14**, stopping plate or module support **no. 15**, half bushing **no. 16** and bushings **no. 17**.

Pull out steering column.

Inspection

Inspect steering column for wear, cracks or bending, replace if any of these problems is detected.

www.midwestmanuals.com
Sales@midwestmanuals.com

www.midwestmanuals.com

Check if steering column O-rings **no. 18** are brittle, hard or otherwise damaged. Replace if necessary.

At the same time, check steering column bearing condition. It must turn smoothly and freely. If not, refer to *STEERING COLUMN BEARING* for replacement procedure.

Installation

For the installation, reverse the removal procedure. Pay attention to the following.

Apply XP-S synthetic grease (P/N 529 550 010) on O-rings and on bushings.

Install **NEW** cotter pins. Both ends of cotter pins must be folded.

STEERING COLUMN BEARING

Removal

Place vehicle on jack stands and remove one wheel.

Remove both footrests, central panel and dashboard (refer to *BODY*).

Remove the air intake silencer. Refer to *AIR INTAKE SYSTEM*.

Separate tie-rods **no. 13** from steering column **no. 12**. Refer to *TIE-ROD* section.

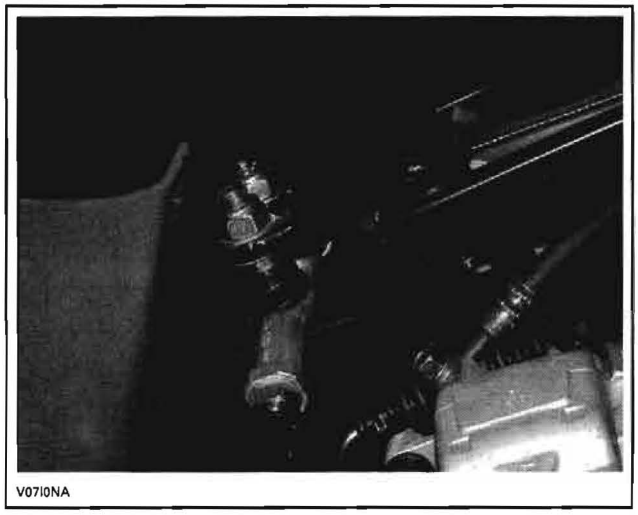

TYPICAL

Remove cotter pin **no. 19** (discard it), elastic nut **no. 20** and flat washer **no. 21** to bottom end of steering column **no. 12**.

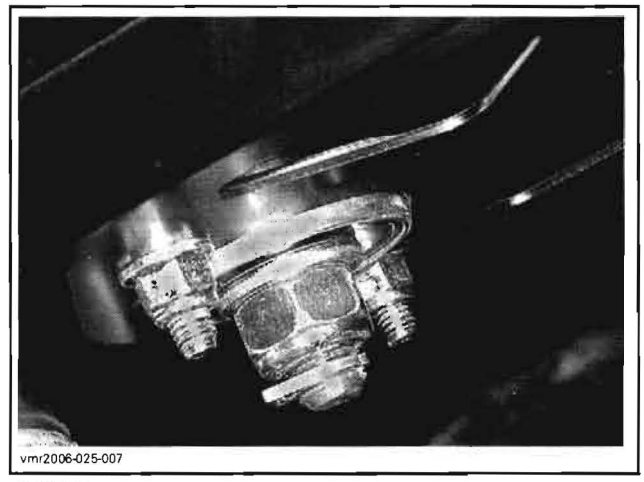

TYPICAL

Pull up steering column.

Remove bolts **no. 22** and bearing flanges **no. 23**.

Remove bearing **no. 24**.

Installation

For installation, reverse the removal procedure. Pay attention to the following details.

Place bearing flanges collars outward.

NOTE: Install both bearing flanges on top of frame support.

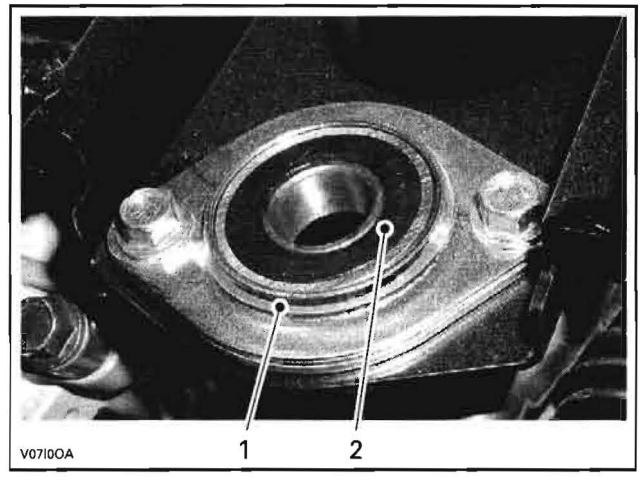

TYPICAL
1. Bearing flange
2. Bearing

Install bearing flange bolts **no. 22**.

Install the steering column, flat washer, elastic nut and a **NEW** cotter pin. Both ends of cotter pin must be folded.

TIE-ROD

NOTE: Use the same procedure for RH and LH side.

www.midwestmanuals.com
Sales@midwestmanuals.com

www.midwestmanuals.com

Removal

Place the vehicle on jack stands and remove the appropriate wheel.

Remove cotter pin (discard it), elastic nut and hardened washers from steering column and knuckle.

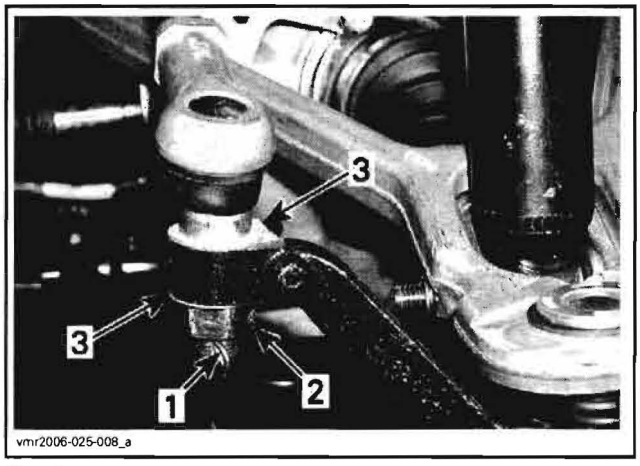

TYPICAL
1. *Cotter pin*
2. *Elastic nut*
3. *Hardened washers*

Inspection

Inspect ball joint ends for wear or looseness, if excessive, replace.

Installation

For the installation, reverse the removal procedure. Pay attention to the following details.

When installing a tie-rod, screw threaded end of tie-rod into ball joint. The maximum length for tie-rod groove to ball joint end must match value "A" in the following chart:

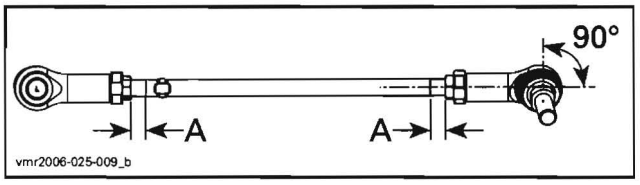

MODEL		"A"
ALL	mm	17.5 ± 5
	in	11/16 ± 3/16

NOTE: Torque the ball joint lock nut **no. 6**.

Install **NEW** cotter pins. Both ends of cotter pins must be folded.

KNUCKLE

Removal

Place vehicle on jack stands and remove the appropriate wheel.

Separate tie-rod **no. 13** from knuckle.

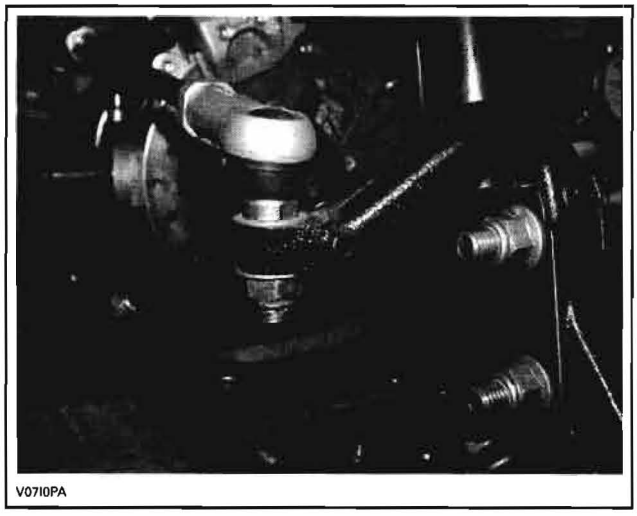

OUTLANDER 500

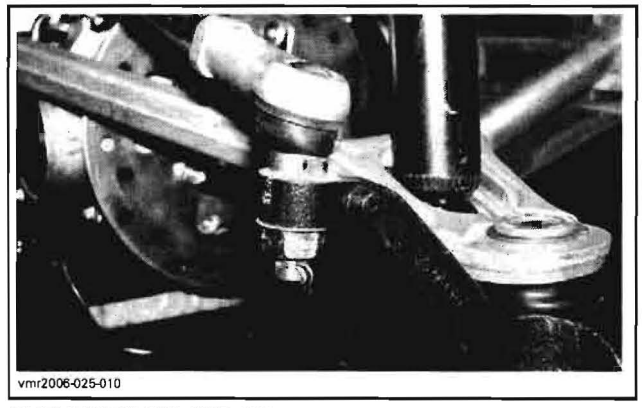

OUTLANDER 650 AND 800

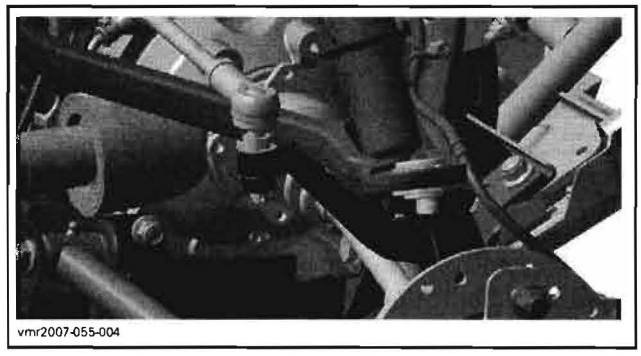

RENEGADE

Remove wheel hub. Refer to *FRONT SUSPENSION*.

www.midwestmanuals.com
Sales@midwestmanuals.com

www.midwestmanuals.com

Outlander 500

Remove strut bolts.

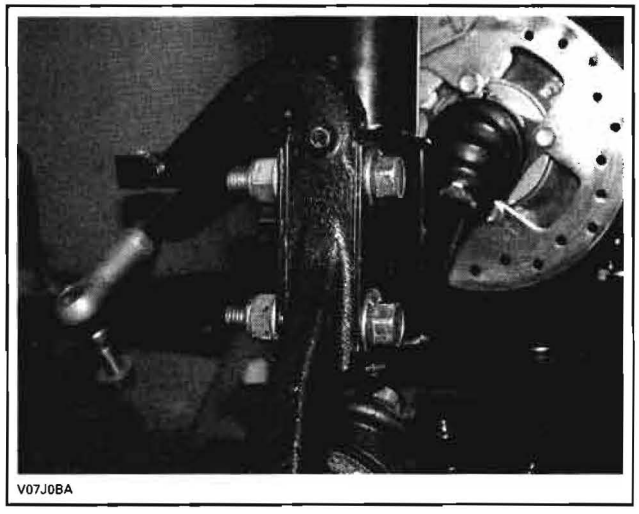

TYPICAL

Remove bolt that attaches lower ball joint to knuckle.

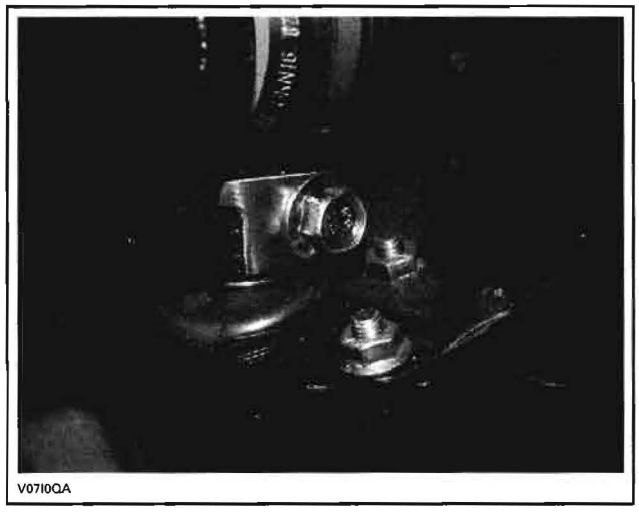

Remove knuckle.

Outlander 650 and 800

Unscrew the upper ball joint nut and separate upper ball joint to knuckle.

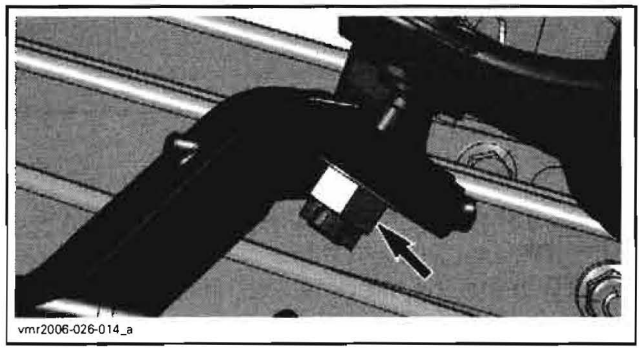

Using a hammer, hit on the knuckle tip to separate ball joint from knuckle. A ball joint remover can be used if the ball joint is jammed into knuckle.

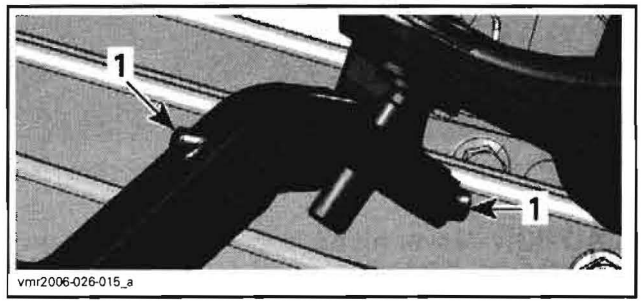

1. Hit here

CAUTION: Never hit on upper suspension arm. Permanent damages could be caused to arm and its replacement would be necessary.

Remove bolt that attaches lower ball joint to knuckle.

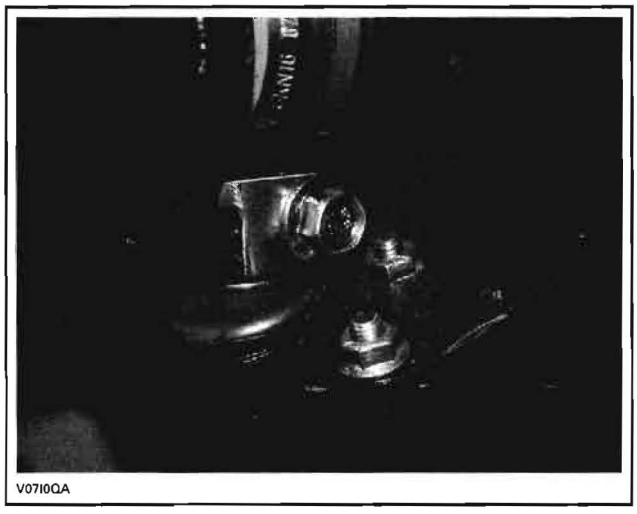

Remove knuckle.

Renegade

Unscrew the upper ball joint nut and separate upper ball joint to knuckle.

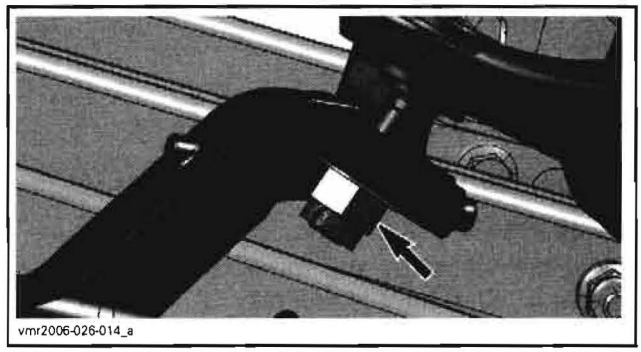

Using a hammer, hit on the knuckle tip to separate ball joint from knuckle. A ball joint remover can be used if the ball joint is jammed into knuckle.

www.midwestmanuals.com
Sales@midwestmanuals.com

www.midwestmanuals.com

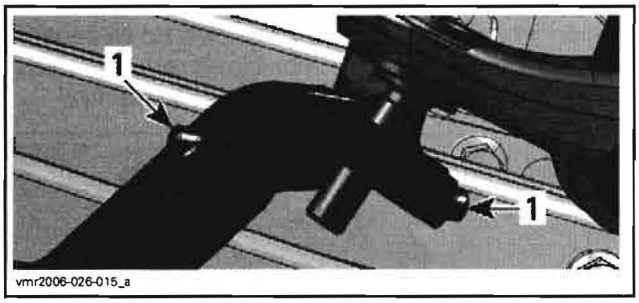

1. Hit here

CAUTION: Never hit on upper suspension arm. Permanent damages could be caused to arm and its replacement would be necessary.

Remove nut that attaches lower ball joint to lower suspension arm.

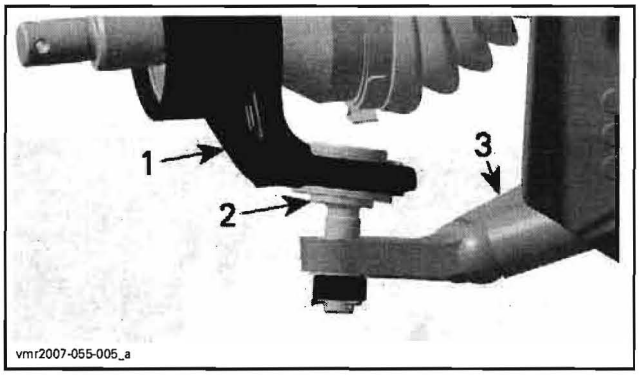

1. Knuckle
2. Lower ball joint
3. Lower suspension arm

Remove knuckle.

Inspection

Check knuckle for cracks or other damages. Replace if necessary.

Check if wheel bearing turns freely and smoothly. See *WHEEL BEARING* below if the replacement is necessary.

Installation

The installation is the reverse of removal procedure.

WHEEL BEARING

Inspection

Raise the front of vehicle.

Hold the wheel by the top and the bottom and move it. Check for lateral play.

If there is any loose, replace the wheel bearing.

NOTE: First, check if ball joint is loose. If necessary repair all defective parts before checking the wheel bearing condition. Be careful not to misjudge loose in the ball joint and loose in the wheel bearing.

Removal

Remove knuckle from vehicle, (see above).

Remove and discard knuckle seal.



TYPICAL

Remove the circlip.

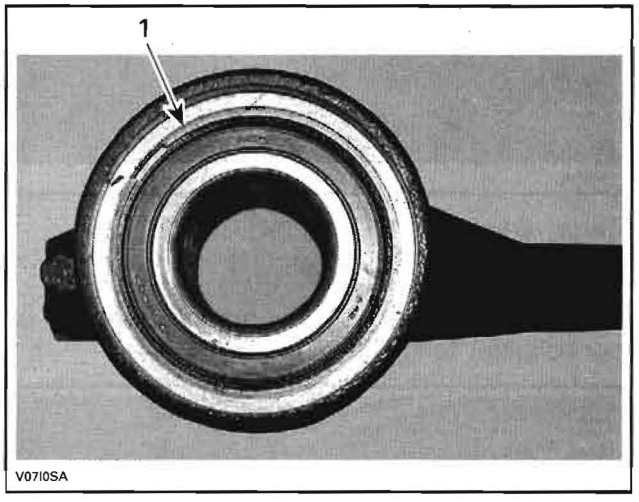

TYPICAL
1. Circlip

Using a press machine, push the bearing out of knuckle.

NOTE: It may be necessary to heat the knuckle to remove the bearing.

www.midwestmanuals.com
Sales@midwestmanuals.com

www.midwestmanuals.com

⚠ WARNING

Clean all grease, outside and inside, from knuckle before heating it.

Installation

Place the bearing in a freezer for 10 minutes before installing.

Place the knuckle in oven to 100°C (212°F) for 30 minutes maximum to ease bearing installation.

When knuckle is cold, install the circlip and the **NEW** seal.

Install the other parts in the reverse order of removal procedure.

MULTIFUNCTION SWITCH

Test

Refer to *LIGHTS, GAUGE AND ACCESSORIES* for Hi-Lo Beam button.

Refer to *IGNITION SYSTEM* for engine run/stop switch and start button.

Removal

Remove multifunction switch screws.

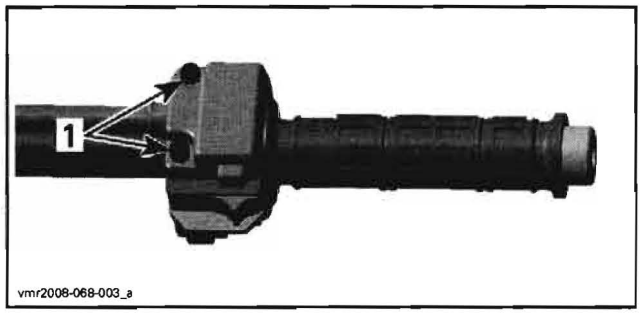

TYPICAL
1. Remove the screws

Separate multifunction switch from handlebar **no. 9**.

Remove central panel. Refer to *BODY*.

Unplug multifunction switch connector. The connector is located under central panel.

Installation

For installation, reverse the removal procedure.

THROTTLE HANDLE

Removal

Remove central panel and unplug the 2/4WD switch connector (except on CE models).

Remove screws.

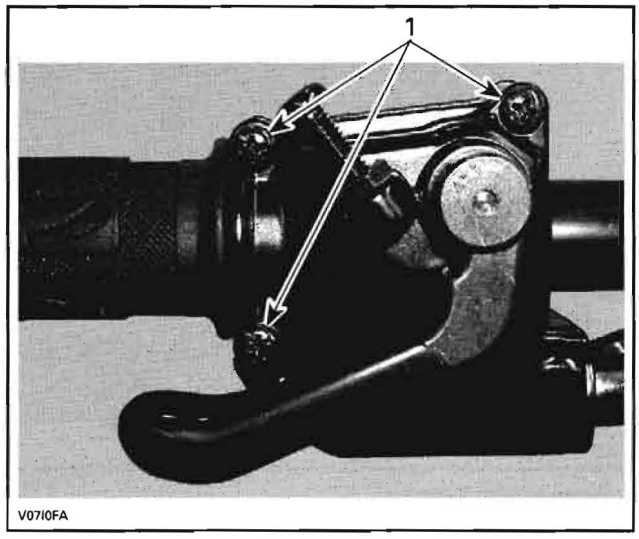

TYPICAL
1. Remove screws

Separate throttle handle from handlebar **no. 9**. Slide rubber protector back to expose throttle cable adjuster.

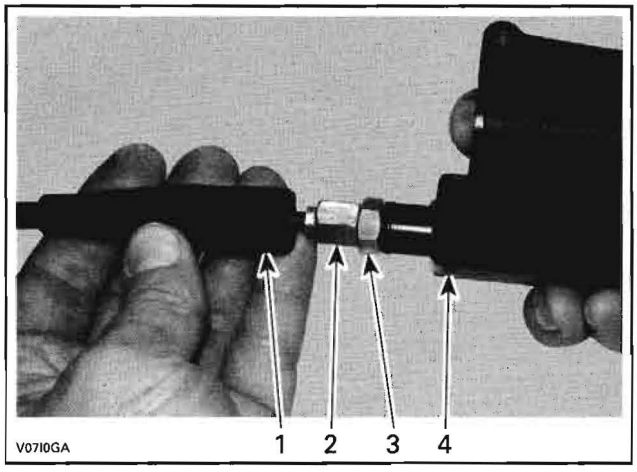

1. Cable protector
2. Throttle cable adjuster
3. Lock nut
4. Throttle lever housing

Loosen lock nut and screw in the throttle cable adjuster.

Remove inner housing protector.

www.midwestmanuals.com
Sales@midwestmanuals.com

www.midwestmanuals.com

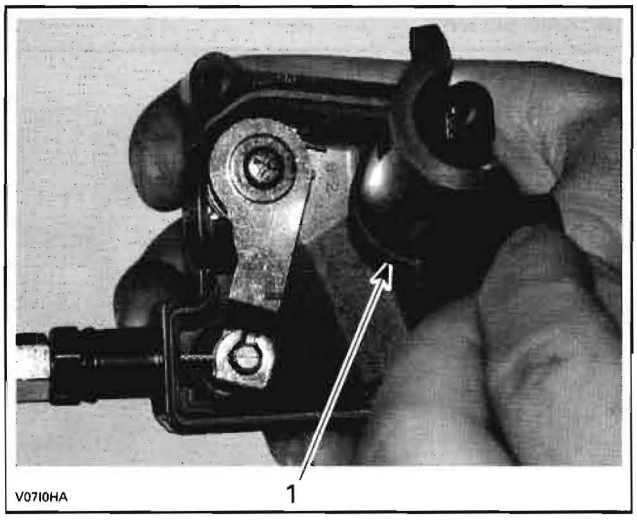

1. Inner housing protector

Slide cable in clip slot and remove the end of the cable from clip.

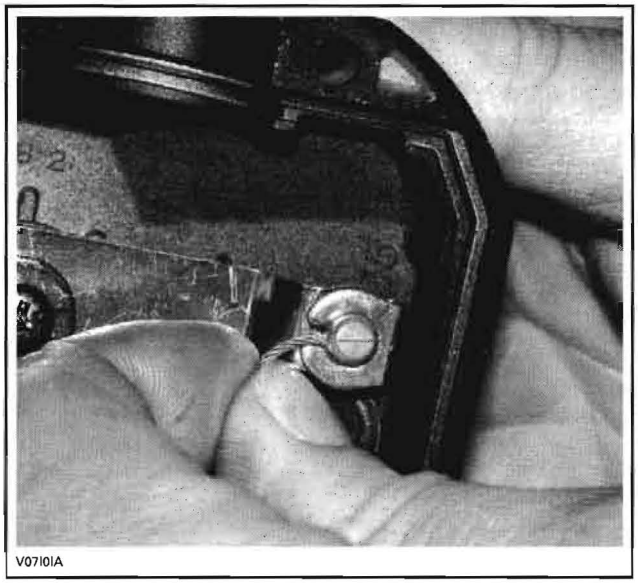

Remove throttle cable from housing.

Installation

For installation, reverse the removal procedure.

After throttle cable installation, the reset of TPS must be performed. Refer to *ENGINE MANAGEMENT*.

HANDLE BRAKE

Removal

Remove screws.

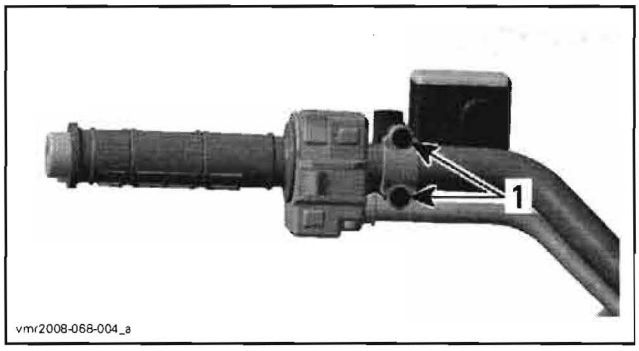

TYPICAL
1. Remove the screws

Separate handle brake from handlebar **no. 9**.

Hose Removal

Refer to *HYDRAULIC BRAKES* for specifics instructions.

Installation

For installation, reverse the removal procedure.

ADJUSTMENT

STEERING ALIGNMENT

Place vehicle on level surface.

Check that handlebar is straight.

Check pressure in each tires. Always follow recommended pressure.

Remove two wheel nuts and install the steering alignment tool (P/N 529 036 059).

Move the vehicle to place the tool on a level with the ground.

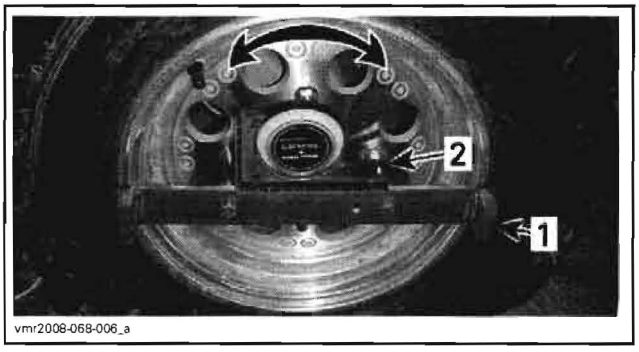

1. Steering adjustment tool
2. Angle gauge or level

Place a rope around the vehicle and using an elastic, link both ends together.

The rope must be place at the center of the wheels.

www.midwestmanuals.com
Sales@midwestmanuals.com

www.midwestmanuals.com

From the front of vehicle, near the front of rim, move rope so that it does not touch the first spacer of tool.

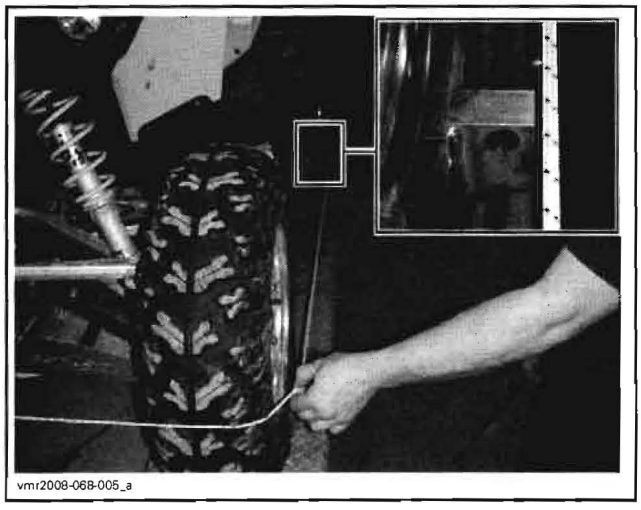
vmr2008-068-005_a

TYPICAL

Then, bring the rope back until it touches the spacer.

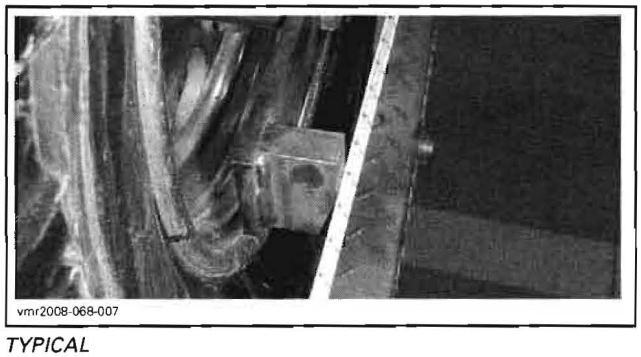
vmr2008-068-007

TYPICAL

Keep this position and measure the distance between the rope and the rim, to the front and to the rear of wheel.

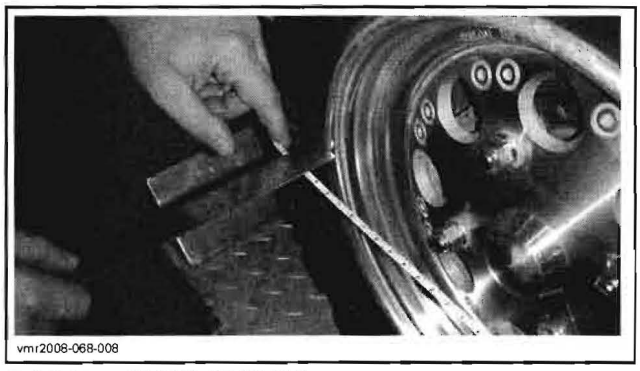
vmr2008-068-008

TYPICAL — FRONT OF WHEEL

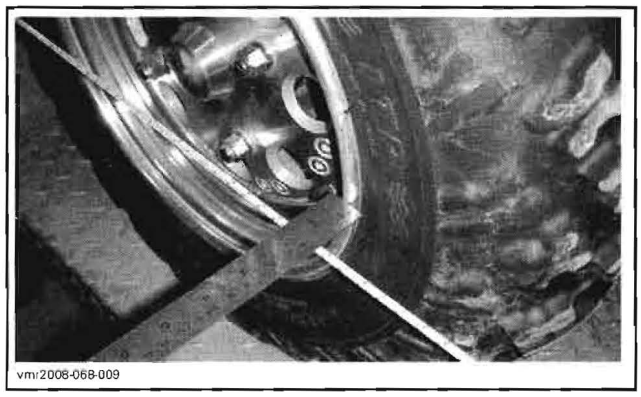
vmr2008-068-009

TYPICAL — REAR OF WHEEL

Refer to the following chart to know the difference between the rear and the front measurement.

MODELS	TOE-OUT
ALL OUTLANDER	0 mm ± 4 mm (0 in ± .157 in)
RENEGADE	2 mm (.79 in)

Set alignment of wheel by adjusting tie-rod.

Repeat the procedure for the other side of vehicle.

www.midwestmanuals.com
Sales@midwestmanuals.com

www.midwestmanuals.com

www.midwestmanuals.com
Sales@midwestmanuals.com

www.midwestmanuals.com

FRONT SUSPENSION

SERVICE TOOLS

Description	Part Number	Page
Supertanium drill bit	529 031 800	349
shock/spring remover	529 036 007	348
ball joint installer	529 036 020	351, 355

SERVICE PRODUCTS

Description	Part Number	Page
suspension grease	293 550 033	351–352
Loctite 243 (blue)	293 800 060	349

Midwest Manuals
sales@midwestmanuals.com
www.midwestmanuals.com

www.midwestmanuals.com
Sales@midwestmanuals.com

www.midwestmanuals.com

Outlander 500 Series

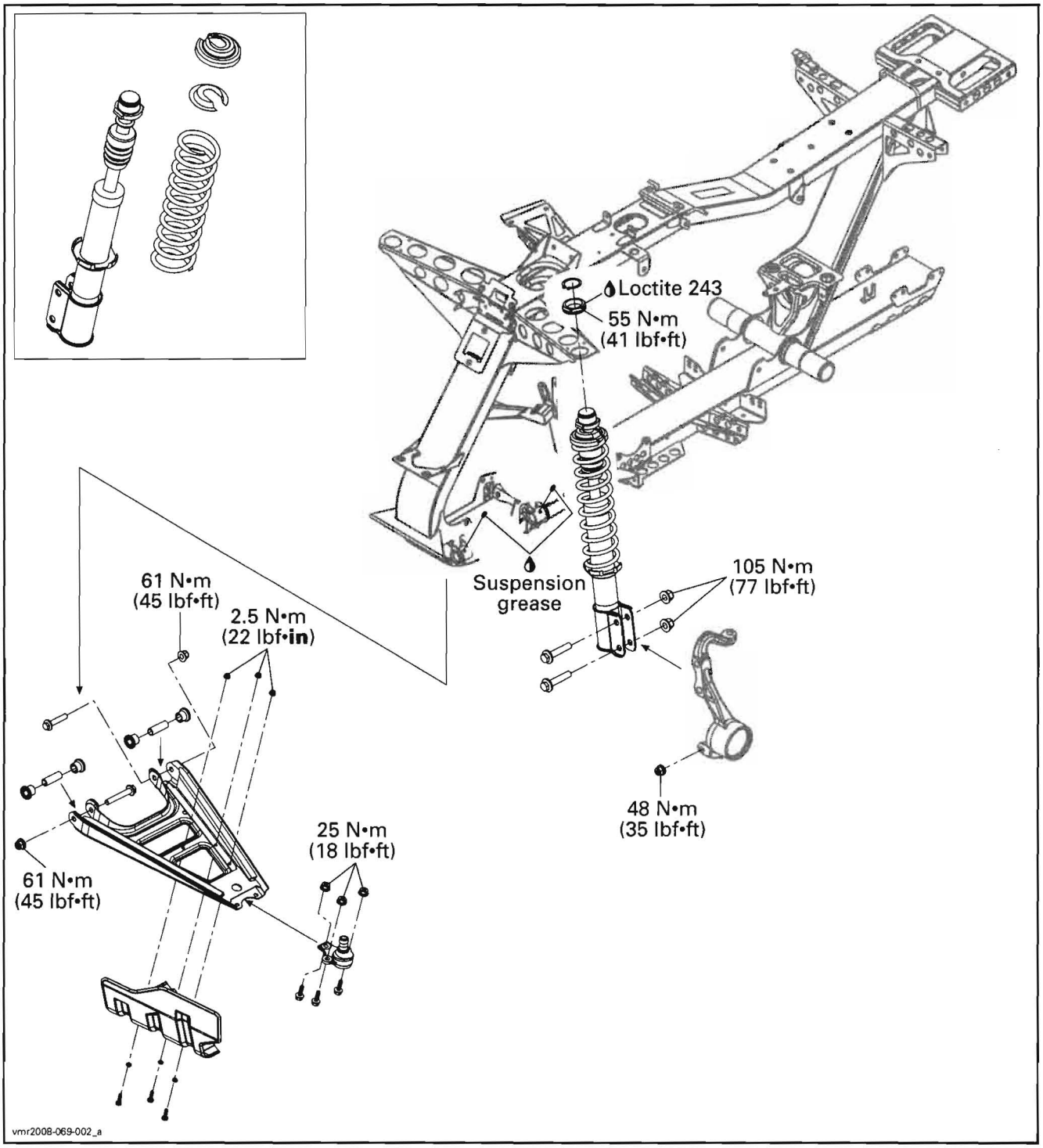

www.midwestmanuals.com
Sales@midwestmanuals.com

www.midwestmanuals.com

Outlander 650/800 Series

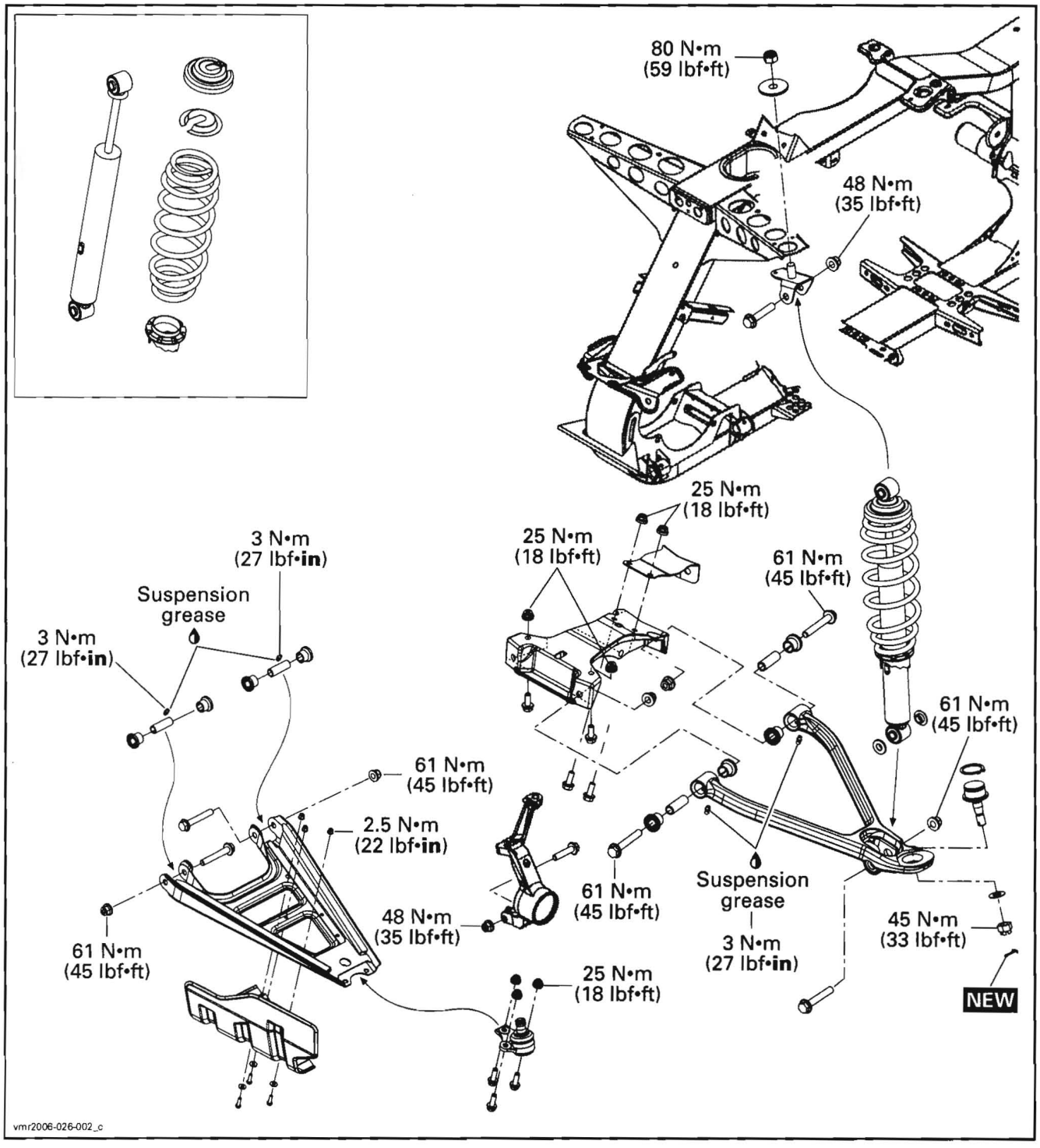

www.midwestmanuals.com
Sales@midwestmanuals.com

www.midwestmanuals.com

Renegade Models

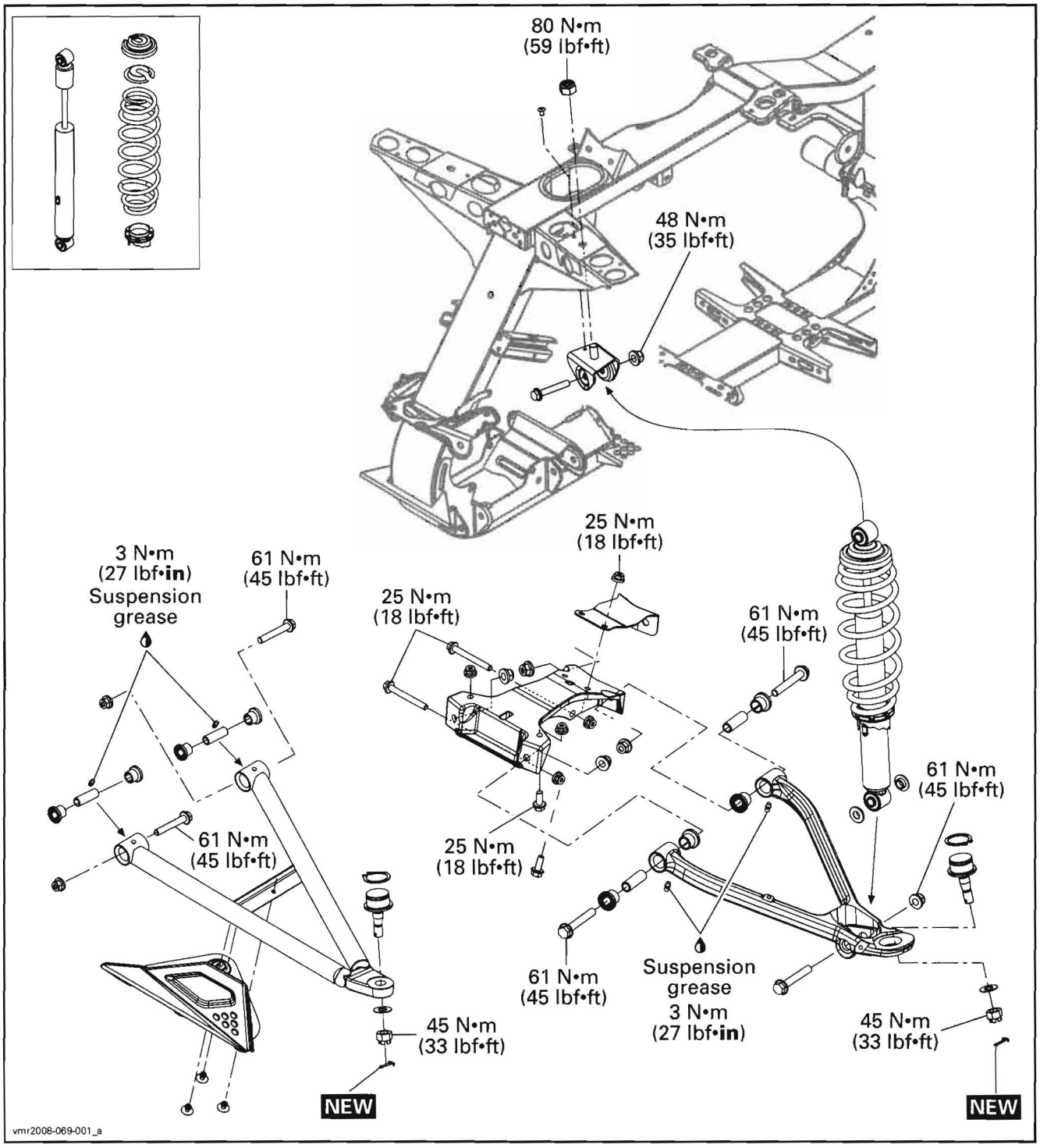

www.midwestmanuals.com
Sales@midwestmanuals.com

www.midwestmanuals.com

GENERAL

The procedure explained below is the same for the RH and LH sides unless otherwise noted.

During assembly/installation, use the torque values and service products as in the exploded view.

Clean threads before applying a threadlocker. Refer to *SELF-LOCKING FASTENERS* and *LOCTITE APPLICATION* at the beginning of this manual for complete procedure.

⚠ WARNING

Torque wrench tightening specifications must strictly be adhered to.
Locking devices (e.g.: locking tabs, elastic stop nuts, cotter pins, etc.) must be replaced with new ones.

PROCEDURES

TIRES AND WHEELS

⚠ WARNING

When the tires are replaced, never install a bias tire with a radial tire. Such a combination could create handling and/or stability problems.
Do not mix tires of different size and/or design on the same axle.
Front and rear tire pairs must be the identical model and manufacturer.
For unidirectional tread pattern, ensure that the tires are installed in the correct direction of rotation.
The radial tires must be installed as a complete set.
Severe injury or death can result if these instructions are not followed.

The tires are directional and their rotation must be kept in a specific direction for proper operation.

SHOCK ABSORBER AND SPRING

Removal

Outlander 500 Series

Loosen wheel nuts of the appropriate wheel.

Lift front of vehicle until front struts are fully extended then install a jack stand under the frame to support the vehicle off the ground.

Remove wheel.

Remove the front rack and the cap on the top of the front fender.

Unscrew bolts retaining strut to the knuckle.

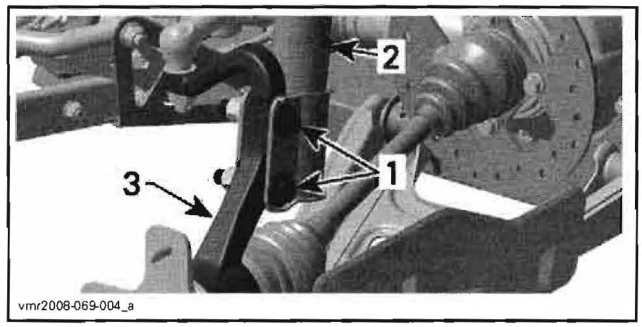

1. *Strut bolts*
2. *Strut*
3. *Knuckle*

Remove the circlip and unscrew the strut nut.

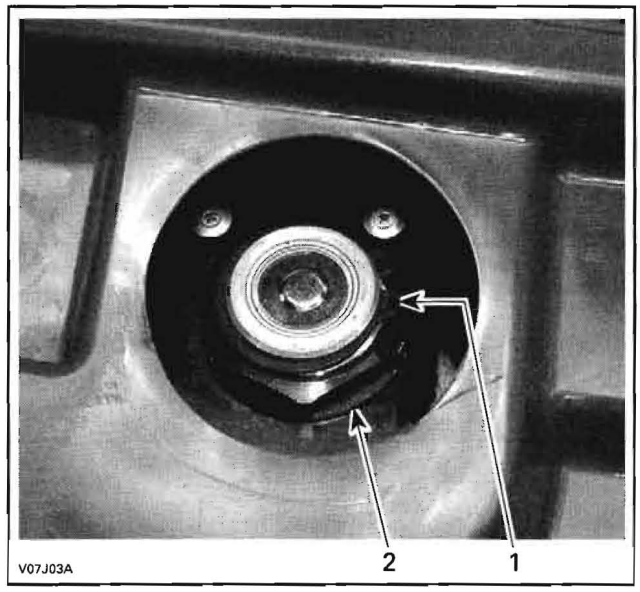

1. *Circlip*
2. *Strut nut*

Remove strut from vehicle.

Outlander 650/800 Series and Renegade Models

Loosen wheel nuts of the appropriate wheel.

Lift the front of the vehicle until shock absorber is fully extended then install a jack stand under the frame to support the vehicle off the ground.

Remove wheel.

Remove lower bolt securing shock absorber to upper suspension arm.

www.midwestmanuals.com
Sales@midwestmanuals.com

www.midwestmanuals.com

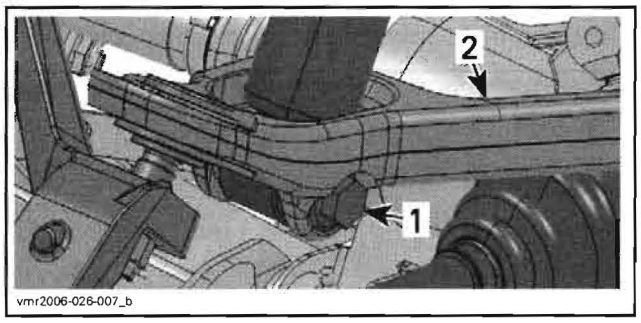

1. *Shock absorber's lower bolt*
2. *Upper suspension arm*

Then the upper bolt from shock absorber support.

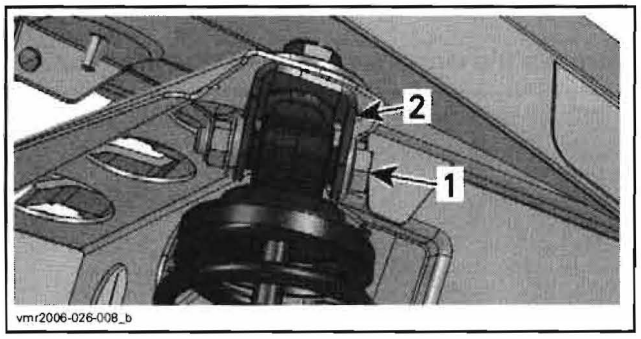

1. *Shock absorber's upper bolt*
2. *Shock absorber support*

When the shock absorber is removed from upper arm, pay attention not to mislay the both metallic bushings.

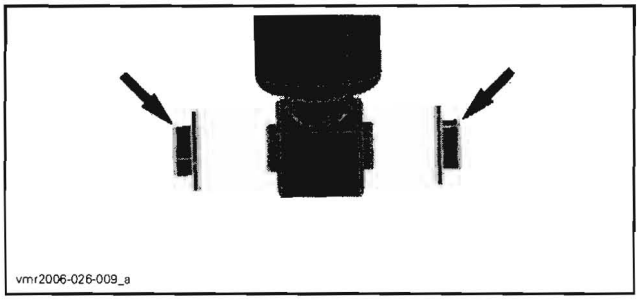

Disassembly

To remove spring from the shock absorber, use the shock/spring remover (P/N 529 036 007).

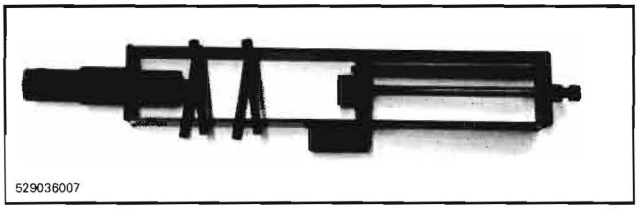

Place the tool in a vise.

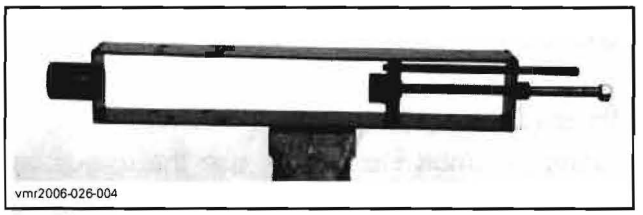

Position the shock absorber in the tool and install the spring compressor pins.

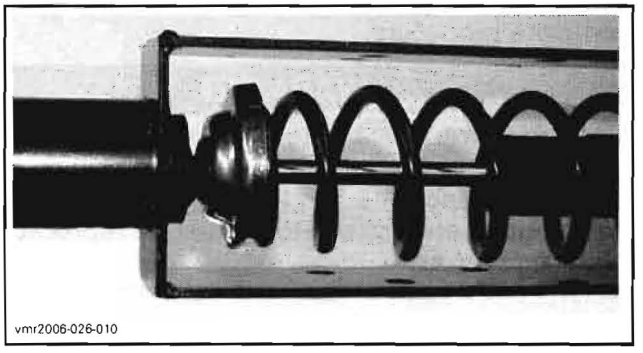

Tighten the shock spring remover screw until the spring is sufficiently compressed to remove spring locking devices.

Remove spring stopper and its cap then release the shock spring remover screw.

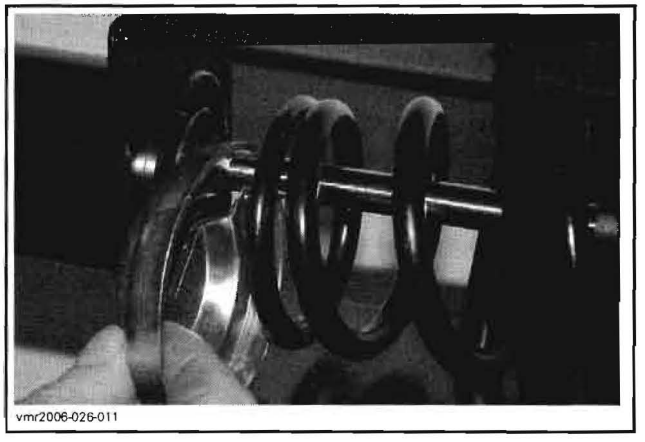

Inspection

Inspect the spring for damage. Replace if necessary.

Inspect shock for oil leakage. Extend and compress the piston several times over its entire stroke. Check that it moves smoothly and with uniform resistance with rod up. Any of the following conditions will denote a defective shock:

- A skip or hang up when reversing stroke at mid travel.
- Seizing or binding conditions except at extreme end of either stroke.
- A gurgling noise after completing one full compression and extension stroke.

www.midwestmanuals.com
Sales@midwestmanuals.com

www.midwestmanuals.com

Replace shock if any of these conditions are found.

Assembly and Installation

For assembly and installation, reverse the disassembly and removal procedures.

Outlander 500 Series

Apply Loctite 243 (blue) (P/N 293 800 060) on threads of strut nut and tighten it to 55 N•m (41 lbf•ft).

LOWER SUSPENSION ARM PROTECTOR

Inspection

Check protector for cracks or other damages. Replace if necessary.

Removal

Outlander Models

Remove bolts then the protector.

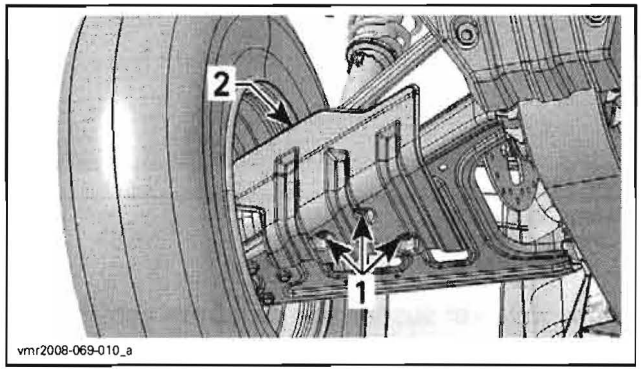

1. *Bolts*
2. *Protector*

Renegade Models

Using a Supertanium drill bit (P/N 529 031 800), drill rivets securing protector to lower suspension arm.

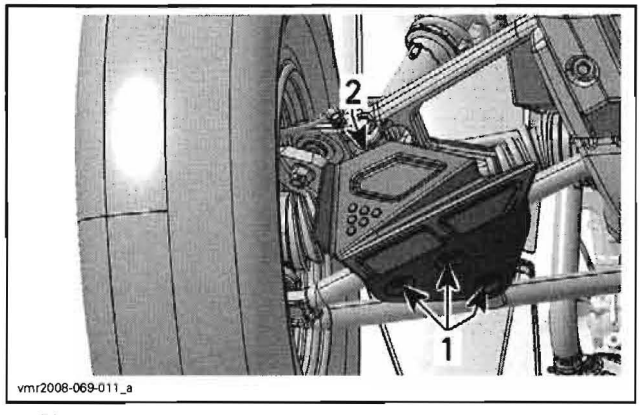

1. *Rivets*
2. *Protector*

Remove the protector.

Installation

The installation is the reverse of removal procedure.

LOWER SUSPENSION ARM

Inspection

Check lower suspension arms for distortion or damage. Replace suspension arms if necessary.

Move lower suspension arm from side to side. There should be no noticeable loose. Replace bushings if necessary.

Move lower suspension arm up and down. There should be no noticeable loose. Replace bushings if necessary.

The following items are performed when the lower suspension arm is removed.

Inspect pivot bushings and cushions for wear or damages. Replace bushings and/or cushions if necessary.

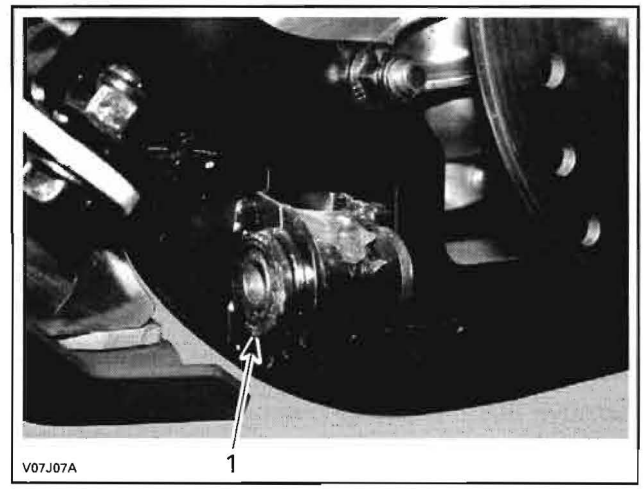

TYPICAL
1. *Pivot bushing*

Check ball joint bellows on lower suspension arm for cracks or any other damage. Inspect ball joint end for damage. Ensure it's moving freely. Replace ball joints as required, see below for procedure.

Removal

Remove wheel.

Remove bolt or nut retaining ball joint to the knuckle.

www.midwestmanuals.com
Sales@midwestmanuals.com

www.midwestmanuals.com

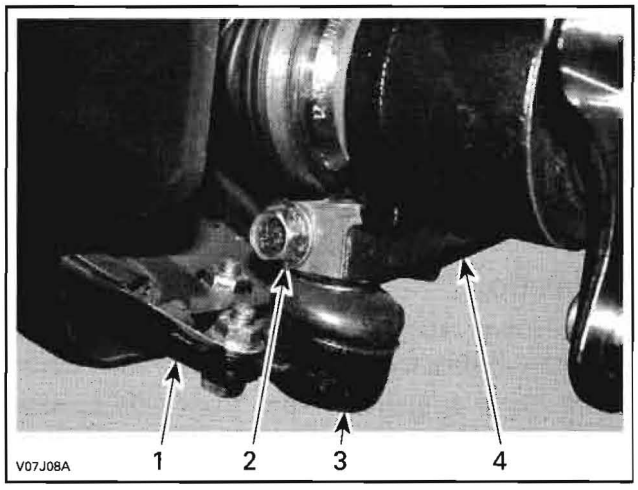

TYPICAL — OUTLANDER MODELS
1. *Lower suspension arm*
2. *Ball joint bolt*
3. *Ball joint*
4. *Knuckle*

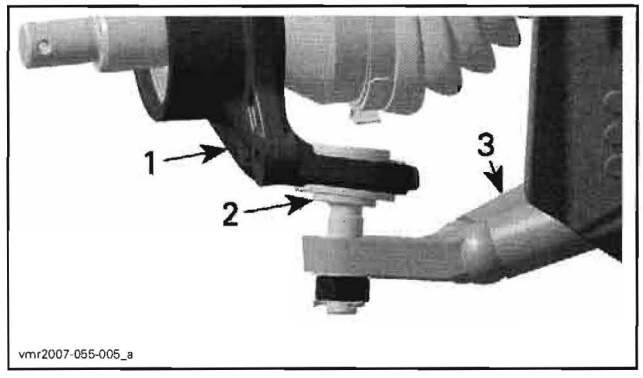

RENEGADE MODELS
1. *Knuckle*
2. *Lower ball joint*
3. *Lower suspension arm*

Separate lower suspension arm from knuckle.

Remove bolts retaining lower suspension arm to frame.

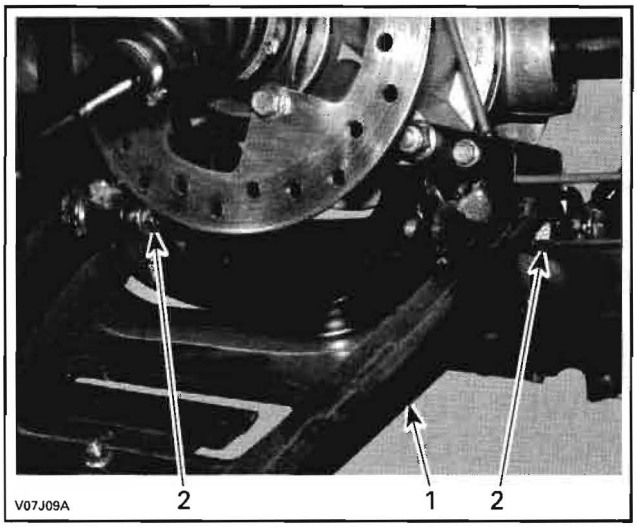

TYPICAL — ALL OUTLANDER MODELS
1. *Lower suspension arm*
2. *Remove bolts*

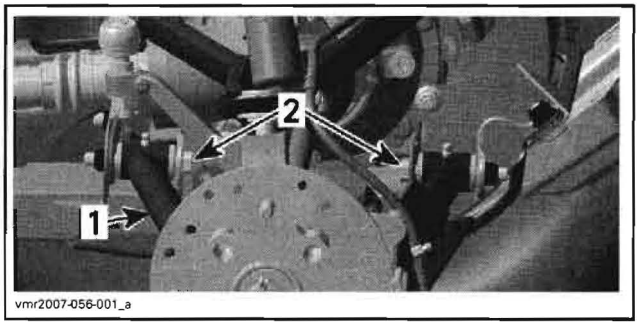

RENEGADE MODELS
1. *Lower suspension arm*
2. *Lower suspension arm bolts*

Remove lower suspension arm from vehicle.

Installation

For assembly, reverse the disassembly procedure. However, pay attention to the following.

Install lower suspension arm to frame.

Install lower suspension arm bolts as per following illustration.

www.midwestmanuals.com
Sales@midwestmanuals.com

www.midwestmanuals.com

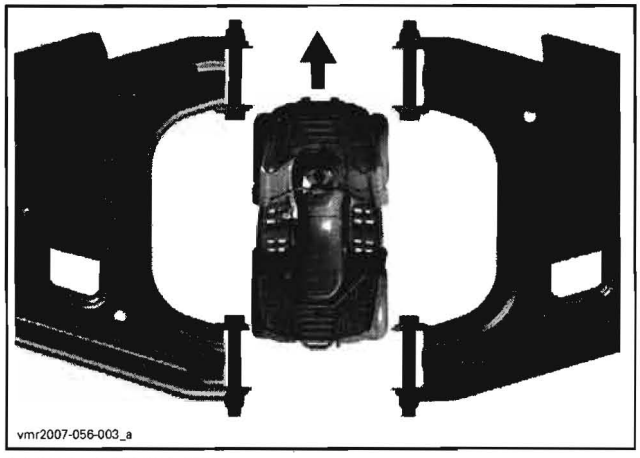

OUTLANDER SERIES

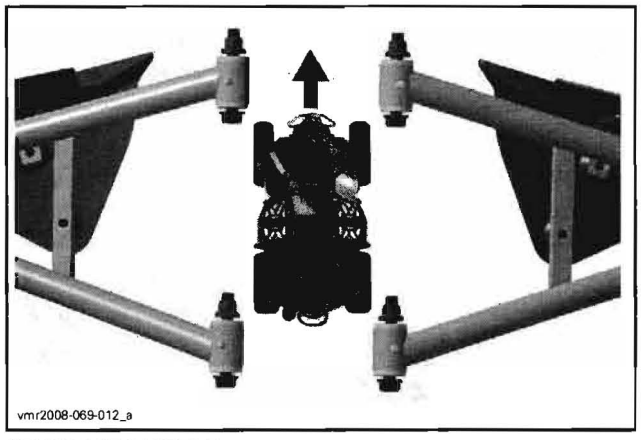

RENEGADE MODELS

Torque lower suspension arm bolts to 61 N•m (45 lbf•ft).

Use suspension grease (P/N 293 550 033) to lubricate both lower suspension arms. There are two grease fitting on each arm.

Attach lower suspension arm to knuckle.

Install wheel. Refer to *STEERING SYSTEM* for proper torque.

LOWER BALL JOINT

Inspection

Check lower ball joint for damage, pitting, looseness and roughness. If so, replace it.

Check ball joint bellows for cracks. Change if necessary.

Removal

Outlander Series

Remove appropriate wheel.

Remove bolt securing ball joint to knuckle.

Unscrew bolts retaining ball joint to lower suspension arm.

Extract the ball joint by pulling it out of lower suspension arm.

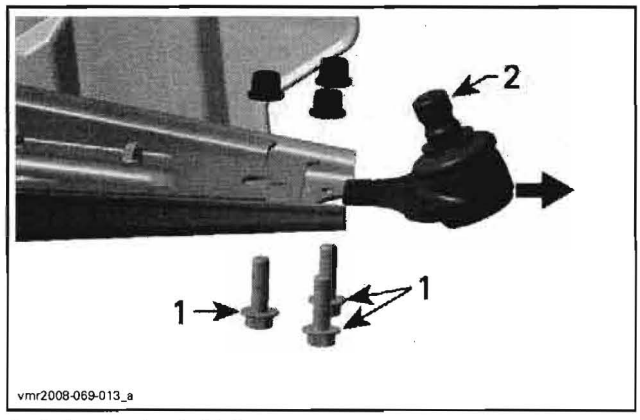

1. *Bolts securing ball joint*
2. *Ball joint*

Renegade Models

Remove knuckle from vehicle. Refer to *STEERING SYSTEM.*

Remove the circlip.

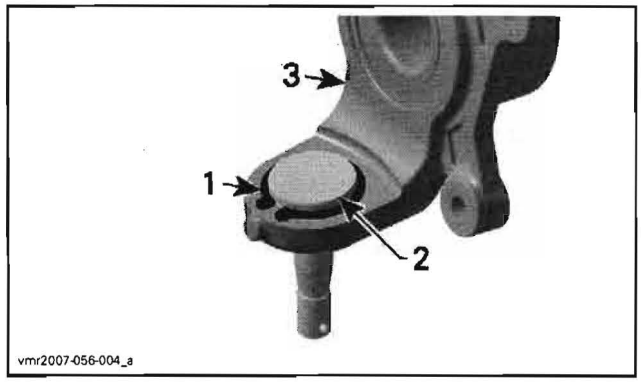

1. *Circlip*
2. *Ball joint*
3. *Knuckle*

Using a press and a small piece of pipe, extract the ball joint. Support the knuckle properly to avoid damaging ball joint location.

Installation

The installation is the reverse of removal procedure.

Renegade Models

To install the ball joint properly, use the ball joint installer (P/N 529 036 020).

www.midwestmanuals.com
Sales@midwestmanuals.com

www.midwestmanuals.com

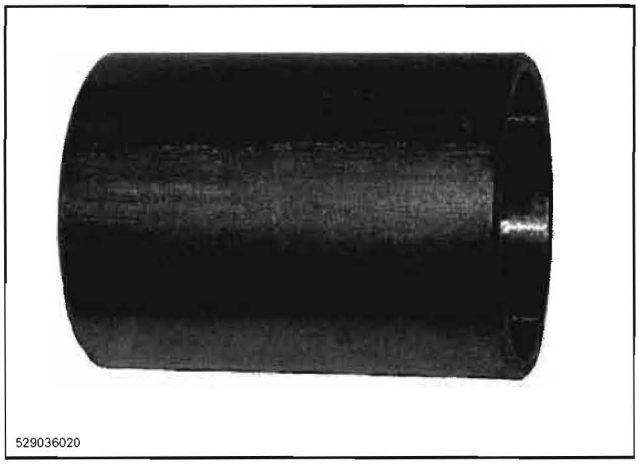

Support the knuckle before pressing the ball joint into its location.

UPPER SUSPENSION ARM

Outlander 650/800 Series and Renegade Models

Lubrication

Use suspension grease (P/N 293 550 033) to lubricate both upper suspension arms. There are two grease fitting on each arm.

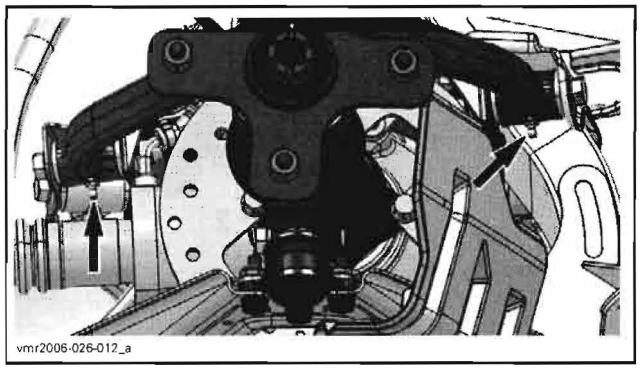

TYPICAL — OUTLANDER SERIES SHOWN, SAME ON RENEGADE

Inspection

Check upper suspension arm for cracks, pitting, distortion or other damages. Replace as required.

Near upper suspension arm bracket, move upper suspension arm up and down then from side to side. There should be no noticeable play. Replace pivot bushings and/or cushions if necessary.

The following items are performed when the upper suspension arm is removed.

- Inspect pivot bushings and cushions for wear.
- Check ball joint bellows for crack or wear.
- Inspect ball joint end for damages. Ensure it is moved freely.

Replace all defective parts.

Removal

Remove appropriate wheel.

Renegade Models

Unscrew bolts securing brake hose on the suspension arm.

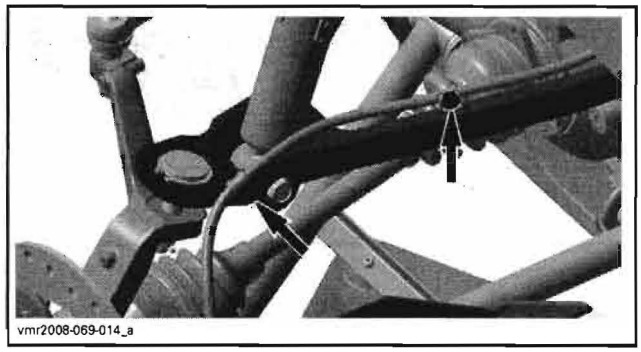

All Models

Remove cotter pin retaining upper ball joint nut. Discard cotter pin.

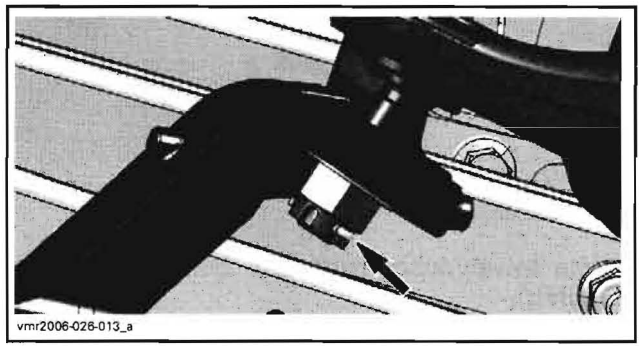

Unscrew upper ball joint nut.

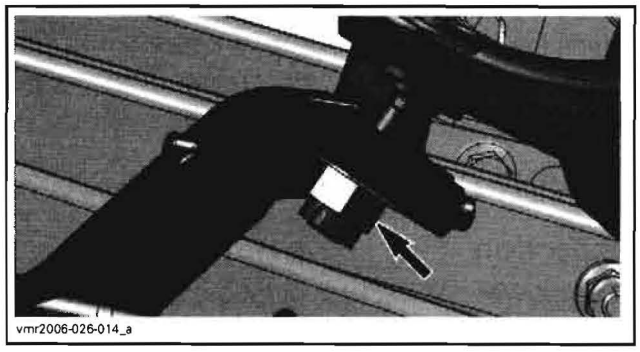

Using a hammer, hit on the knuckle tip to separate ball joint from knuckle.

NOTE: A ball joint remover can be used if the ball joint is jammed into knuckle.

www.midwestmanuals.com
Sales@midwestmanuals.com

www.midwestmanuals.com

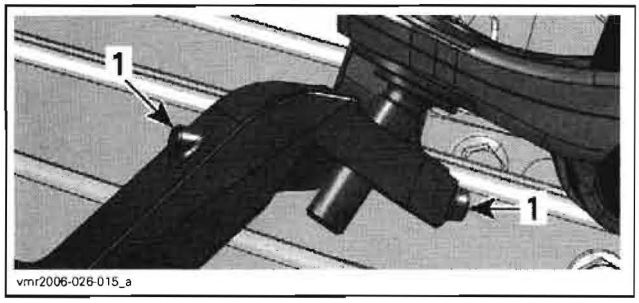

1. Hit here

CAUTION: Never hit on upper suspension arm. Permanent damages could be caused on arm and its replacement will be necessary.

Remove shock absorber lower bolt from upper suspension arm.

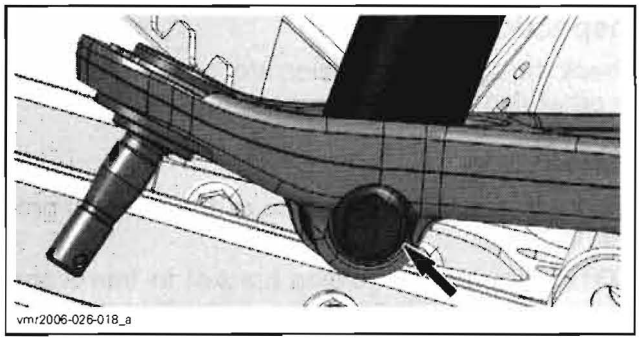

Unscrew bolts that attach upper suspension arm to upper suspension arm bracket.

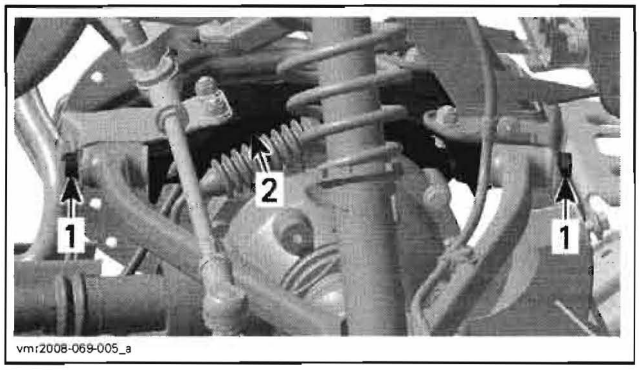

1. Upper suspension arm bolts
2. Suspension arm bracket

Remove upper suspension arm from vehicle.

Installation

Position the upper suspension arm and install its bolts. Torque to 61 N•m (45 lbf•ft).

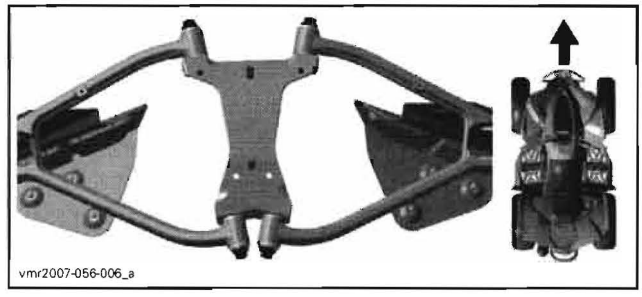

TYPICAL — RENEGADE SHOWN

Attach the upper suspension arm to knuckle. When hardened washer and upper ball joint nut are installed, tighten nut to 45 N•m (33 lbf•ft).

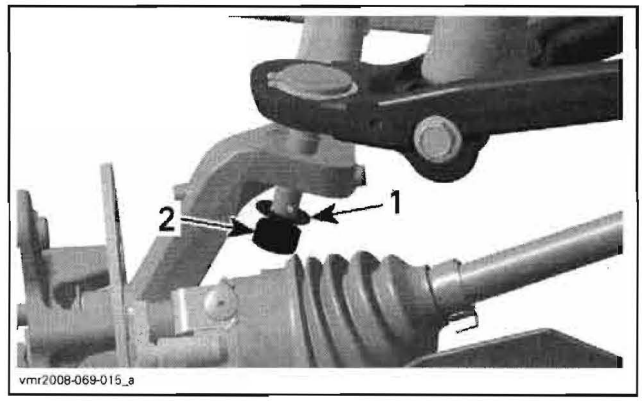

1. Hardened washer
2. Ball joint nut

Install a **NEW** cotter pin. Both end of cotter pin must be folded.

Install the shock absorber lower bolt and torque it to 61 N•m (45 lbf•ft).

Install wheel.

UPPER SUSPENSION ARM BRACKET

Removal

Remove both front wheels.

Outlander 650/800 Series

Unscrew the left caliper and attach it out of way.

www.midwestmanuals.com
Sales@midwestmanuals.com

www.midwestmanuals.com

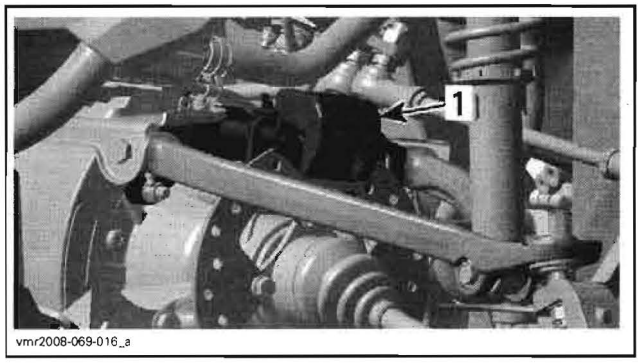

1. Left caliper

Renegade Models

Unscrew bolts securing brake hose on the upper suspension arm.

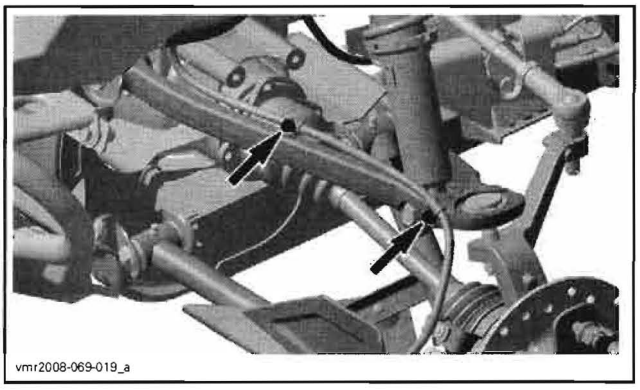

All Models

Unscrew upper suspension arms from the upper suspension arm bracket.

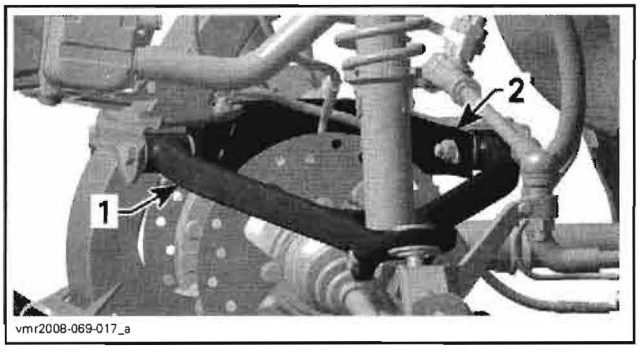

1. LH upper suspension arm
2. Upper suspension arm bracket

Remove differential upper bolts.

Remove front bolts that attach the upper suspension arm bracket to frame.

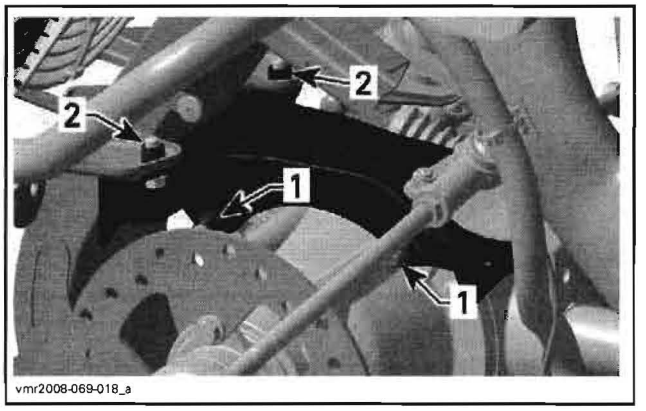

1. Upper differential bolts
2. Front bracket retaining bolts

Slide bracket backward then pull it by the left side.

Inspection

Check the upper suspension arm bracket for crack or other damages. Replace as required.

Installation

The installation is the reverse of the removal procedure.

NOTE: Install bolts holding bracket to frame and upper differential bolts before tightening them.

UPPER BALL JOINT

Outlander 650/800 Series and Renegade Models

Inspection

Check upper ball joint for damage, pitting, looseness and roughness. If so, replace it.

Check ball joint bellows for cracks. Replace as required.

Removal

Remove upper suspension arm.

Remove the circlip.

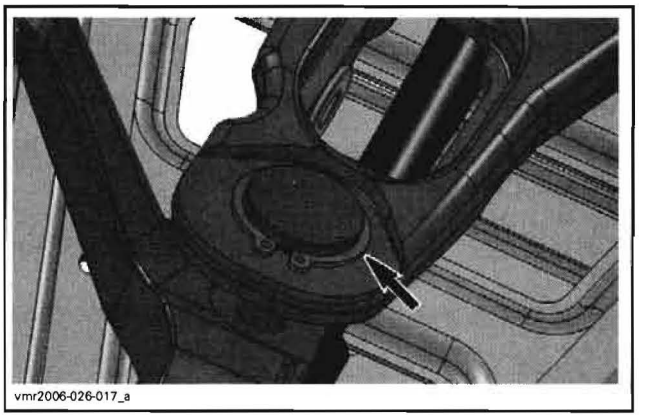

www.midwestmanuals.com
Sales@midwestmanuals.com

www.midwestmanuals.com

Using a press and a piece of pipe, remove the ball joint.

CAUTION: Support upper suspension arm properly to avoid damaging ball joint location.

Installation

To install the upper ball joint properly, use the ball joint installer (P/N 529 036 020).

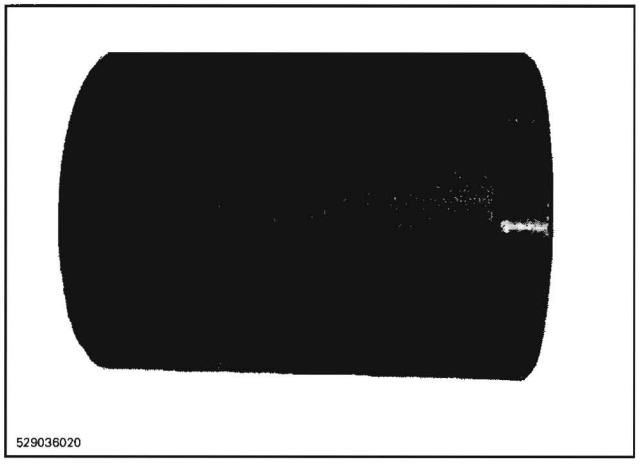

Support the upper suspension arm before pressing the ball joint into its location.

Install the upper suspension arm.

Install wheel.

www.midwestmanuals.com
Sales@midwestmanuals.com



sales@midwestmanuals.com
www.midwestmanuals.com

www.midwestmanuals.com

REAR SUSPENSION

SERVICE TOOLS

Description	Part Number	Page
Bearing extractor/installer	529 035 918	363
Bearing extractor/installer	529 035 920	363
trailing arm support	529 035 922	363
spanner wrench	529 035 925	362
shock spring remover	529 036 007	359

SERVICE PRODUCTS

Description	Part Number	Page
Loctite 243 (blue)	293 800 060	362

www.midwestmanuals.com
Sales@midwestmanuals.com

www.midwestmanuals.com

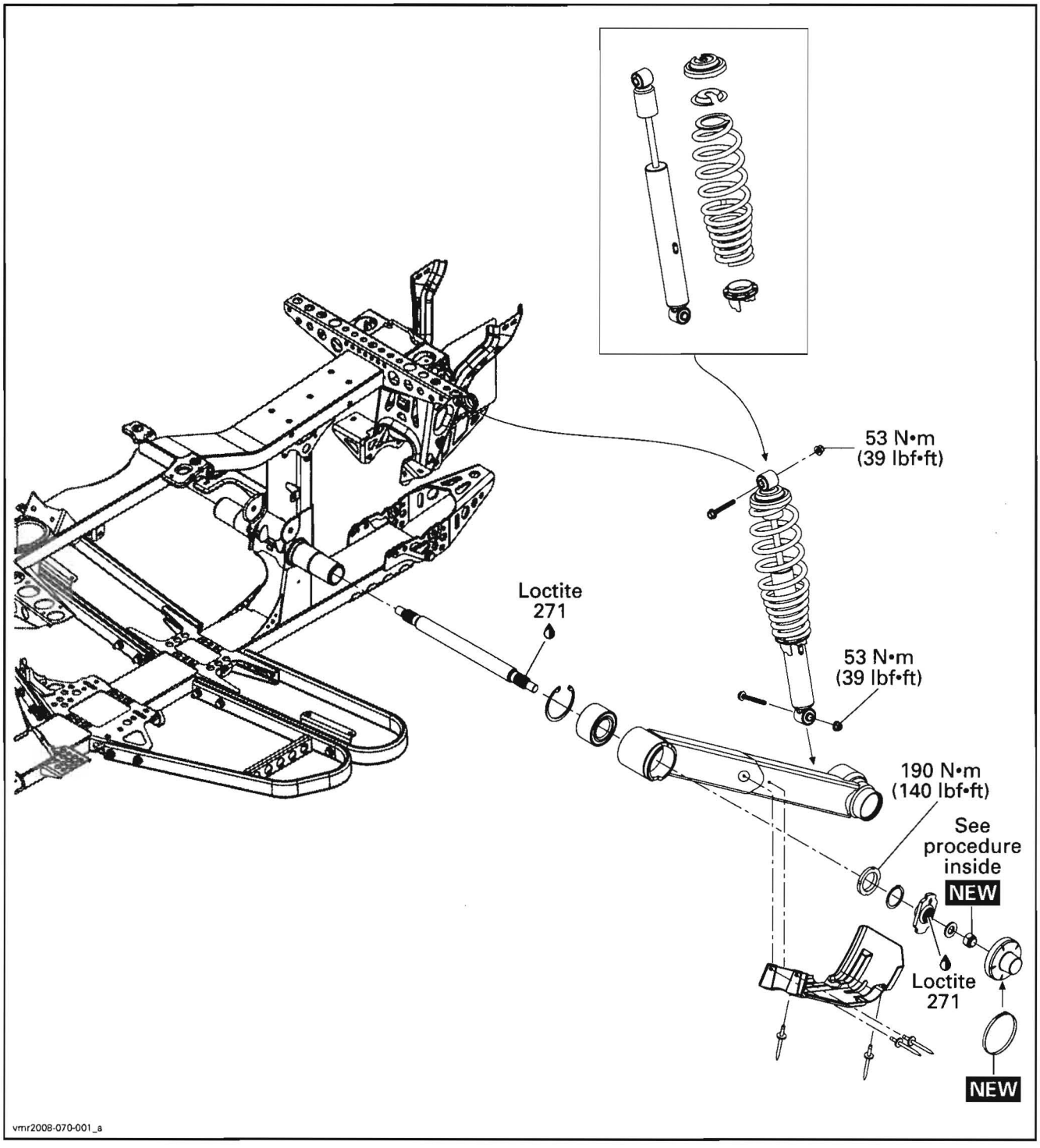

www.midwestmanuals.com
Sales@midwestmanuals.com

www.midwestmanuals.com

GENERAL

The procedure described below is the same for the RH and LH sides, unless otherwise instructed.

During assembly/installation, use the torque values and service products as in the exploded views.

Clean threads before applying a threadlocker. Refer to *SELF-LOCKING FASTENERS* and *LOCTITE APPLICATION* at the beginning of this manual for complete procedure.

⚠ WARNING

Torque wrench tightening specifications must strictly be adhered to.
Locking devices (e.g.: locking tabs, elastic stop nuts, cotter pins, etc.) must be replaced with new ones.

PROCEDURES

TIRES AND WHEELS

⚠ WARNING

When the tires are replaced, never install a bias tire with a radial tire. Such a combination could create handling and/or stability problems.
Do not mix tires of different size and/or design on the same axle.
Front and rear tire pairs must be the identical model and manufacturer.
For unidirectional tread pattern, ensure that the tires are installed in the correct direction of rotation.
The radial tires must be installed as a complete set.
Severe injury or death can result if these instructions are not followed.

The tires are directional and their rotation must be kept in a specific direction for proper operation.

Torque wheel nuts in accordance with the following illustration.

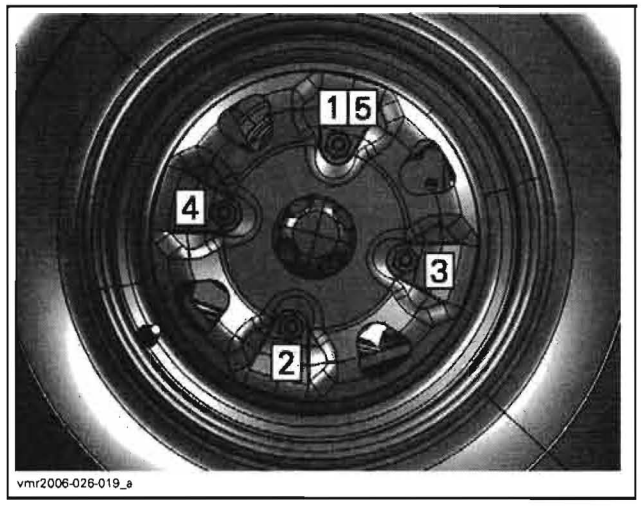

vmr2006-026-019_a

CAUTION: Always use the recommended wheel nuts. Using a different nut could cause damages to the rim.

REAR SHOCK

Removal

Lift rear of vehicle until rear shock absorbers are fully extended.

Install jack stands or blocks under the frame to support the vehicle.

Remove upper and lower bolts retaining shock absorbers.

Disassembly

Use the shock spring remover (P/N 529 036 007).

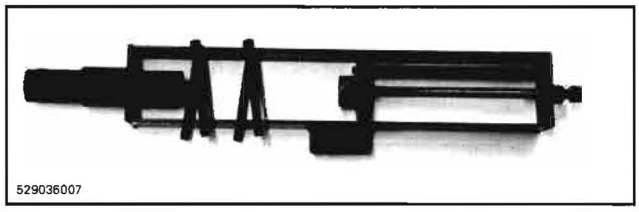
529036007

Place the tool in a vise.

Position the shock absorber in the tool and install the spring compressor pins.

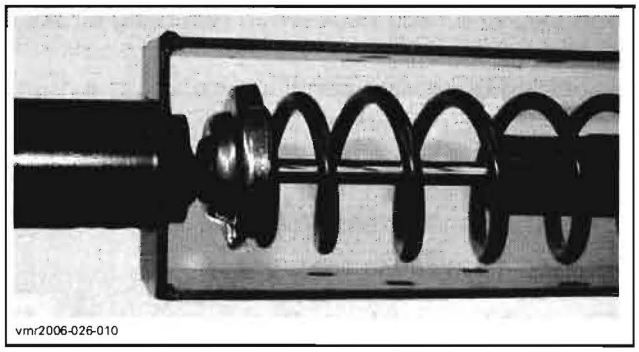
vmr2006-026-010

www.midwestmanuals.com
Sales@midwestmanuals.com

www.midwestmanuals.com

Tighten the shock spring remover screw until the spring is sufficiently compressed to remove spring locking devices.

Remove spring stopper and its cap then release the shock spring remover screw.

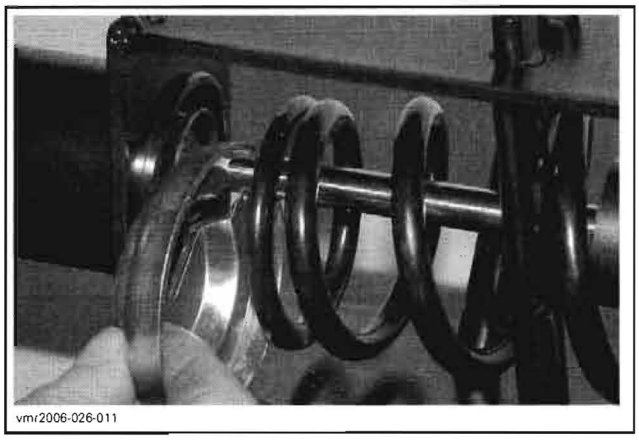
vmr2006-026-011

Remove spring from shock.

Inspection

Secure the end of shock body in a vise with its rod upward.

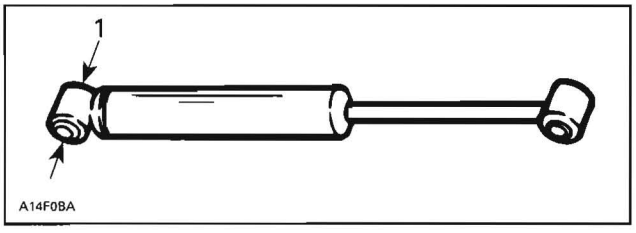

TYPICAL
1. Clamp here

CAUTION: Do not clamp directly on shock body.

Examine each shock for leaks. Extend and compress the piston several times over its entire stroke. Check that it moves smoothly and with uniform resistance with its rod upward.

Pay attention to the following conditions that will denote a defective shock:

- A skip or a hang back when reversing stroke at mid travel.
- Seizing or binding condition except at extreme end of either stroke.
- Oil leakage.
- A gurgling noise, after completing one full compression and extension stroke.

Replace if any faults are present.

Assembly and Installation

Assembly and installation are essentially the reverse of disassembly and removal procedures.

NOTE: Install cap opening at 180° from spring stopper opening.

TORSION BAR

Removal

Apply parking brake and lift rear of vehicle until rear shock absorbers are fully extended.

Install a jack stand or blocks under the frame to safely support the vehicle.

Remove both footrests.

Remove and discard both protective cover clamps.

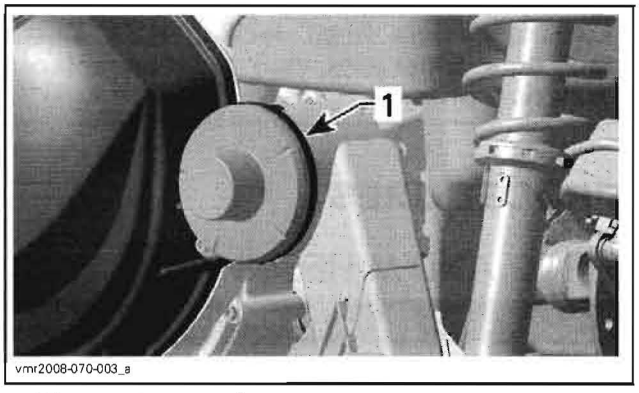

1. LH protective cover clamp

Remove protective covers.

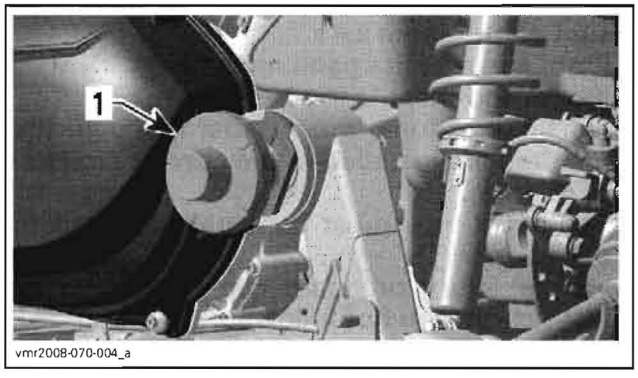

1. Protective cover

Remove both elastic nuts (discard them) and both flat washers.

www.midwestmanuals.com
Sales@midwestmanuals.com

www.midwestmanuals.com

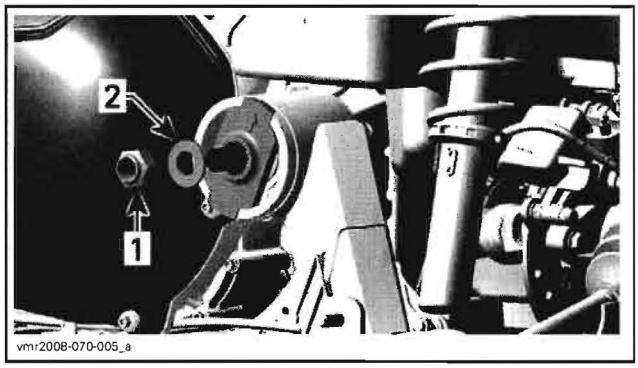

1. *Elastic nut*
2. *Flat washer*

Remove torsion bar levers.

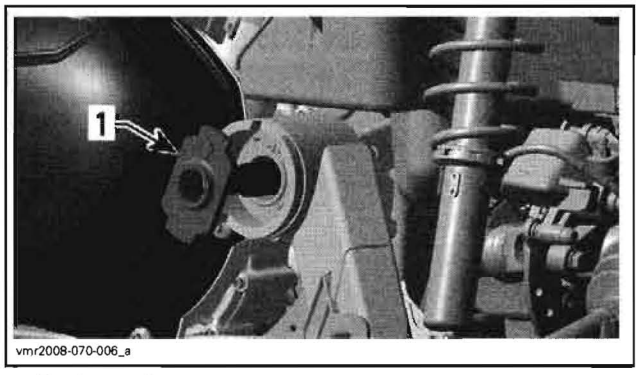

1. *Torsion bar lever*

Remove the torsion bar.

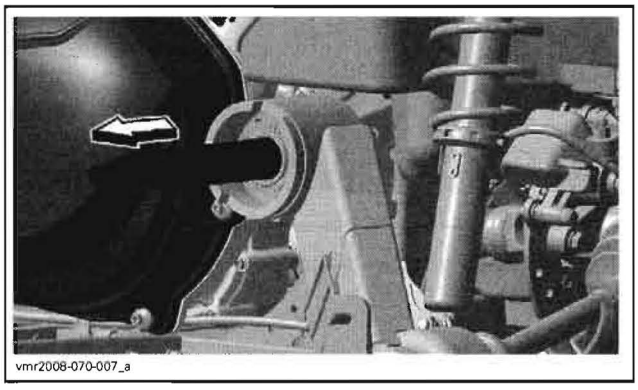

Inspection

Check torsion bar for cracks, bending or other damages.

Verify splines for damages (torsion bar and torsion bar lever).

Check torsion bar lever tabs for racking, cracks or other damages.

NOTE: If a tab is damaged, check the trailing arm for damages.

Replace all damaged parts.

Installation

Insert the torsion bar into the frame and install the torsion bar lever (one on each side).

NOTE: Ensure torsion bar lever is aligned with the cut-outs on the swing arm and arrow is pointing up.

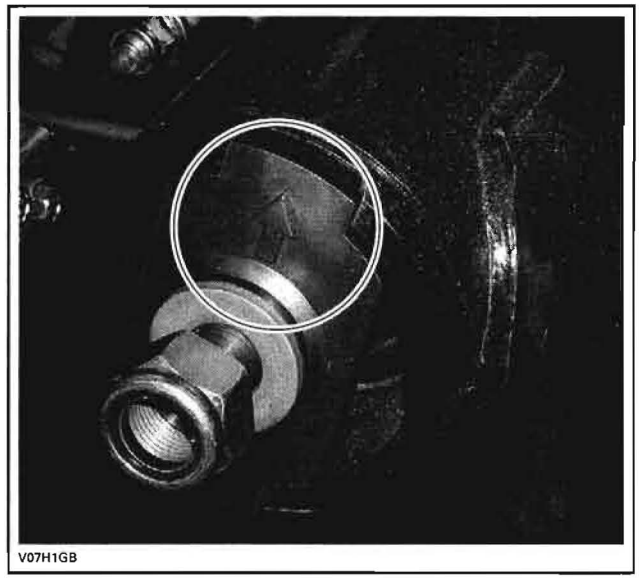

Install the flat washer and a **NEW** elastic nut.

First torque the right hand side elastic nut to 55 N•m (41 lbf•ft), then the left hand side to 120 N•m (89 lbf•ft).

Reinstall both torsion bar covers with **NEW** clamps.

TRAILING ARM

Removal

Apply parking brake and lift rear of vehicle until rear shock absorbers are fully extended.

Install a jack stands or a blocks under the frame to safely support the vehicle.

Remove wheel hub (refer to *REAR DRIVE*).

Remove the protective cover, the elastic nut and the flat washer.

Remove the torsion bar lever.

Remove the circlip securing the trailing arm.

www.midwestmanuals.com
Sales@midwestmanuals.com

www.midwestmanuals.com

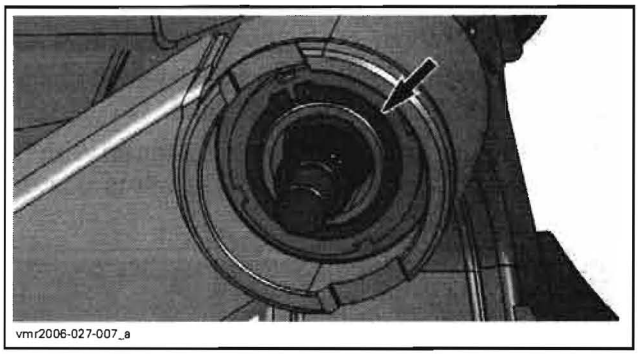
vmr2006-027-007_a

Unscrew the trailing arm nut.

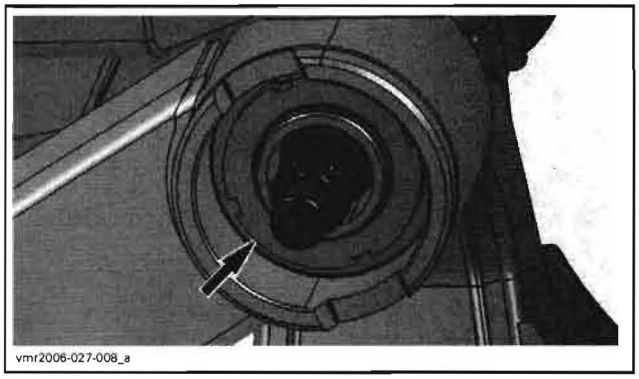
vmr2006-027-008_a

To do this, use the spanner wrench (P/N 529 035 925).

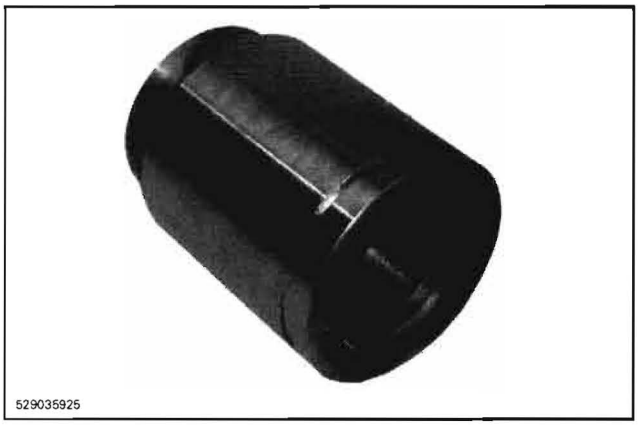
529035925

Unscrew lower bolt of shock absorber.

Remove trailing arm.

Inspection

Check trailing arms for cracks, bending or other damages.

Verify bearings for smooth and free operation.

Replace all damaged parts.

Installation

Insert drive shaft end into trailing arm.

Install the trailing arm on frame.

Install the lower shock absorber bolt to support the trailing arm. Do not torque yet.

Frame Side

Apply Loctite 243 (blue) (P/N 293 800 060) on trailing arm nut threads.

Install the trailing arm nut and torque it to 190 N•m (140 lbf•ft).

Install circlip, torsion bar lever, washer and a **NEW** elastic nut. Torque the left elastic nut to 120 N•m (89 lbf•ft) and the right elastic nut to 55 N•m (41 lbf•ft).

Install protective cover.

Wheel Side

Install wheel hub, Belleville washer and castellated nut.

Torque castellated nut to 205 N•m (151 lbf•ft) and further tighten until its grooves align with the next cotter pin hole.

Install a **NEW** cotter pin then the wheel cap.

NOTE: The longer end of cotter pin must be folded over shaft end.

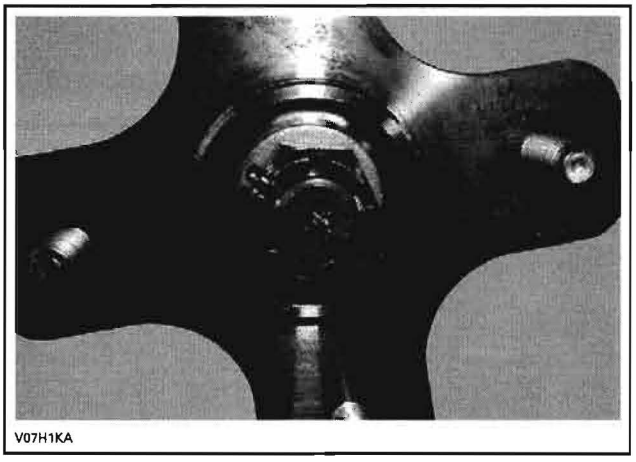
V07H1KA

Torque the shock absorber bolt to 53 N•m (39 lbf•ft).

Install wheel.

TRAILING ARM BEARINGS

Remove trailing arm. Refer to procedure above.

Inspection

Check inner race of each trailing arm bearing with your finger. The bearings should turn smoothly and quietly. Remove and discard bearings if race does not turn smoothly or quietly.

Removal

The same procedure can be used for both bearings.

www.midwestmanuals.com
Sales@midwestmanuals.com

www.midwestmanuals.com

NOTE: Before extracting the bearing on wheel side, remove the protector by drilling the pop rivets with a 3/16" drill.

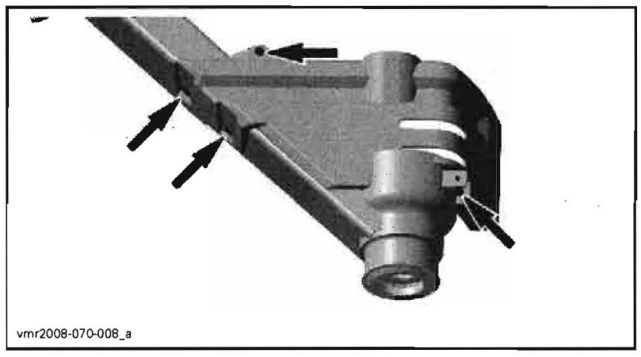

Remove the circlip.

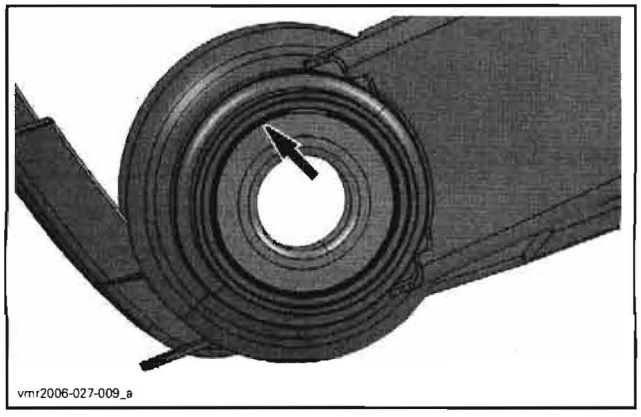

WHEEL SIDE

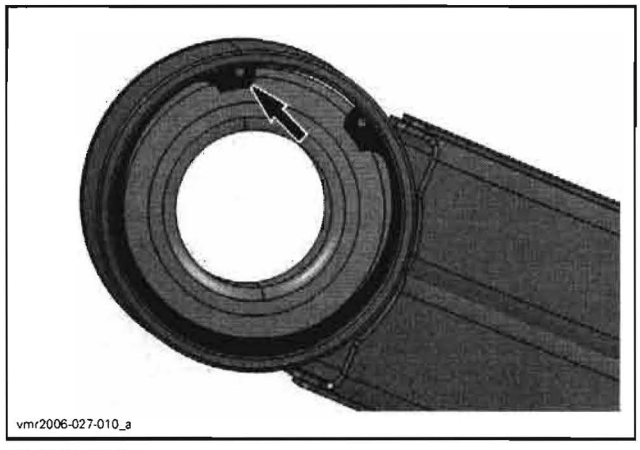

FRAME SIDE

Place the trailing arm support (P/N 529 035 922) on the end of trailing arm.

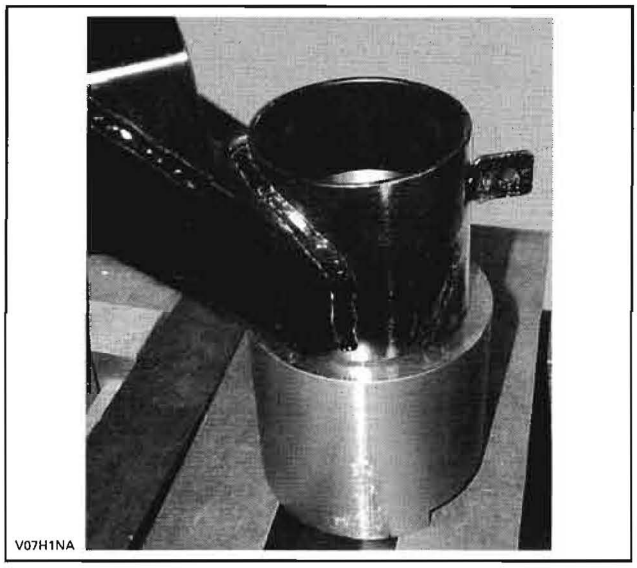

WHEEL SIDE

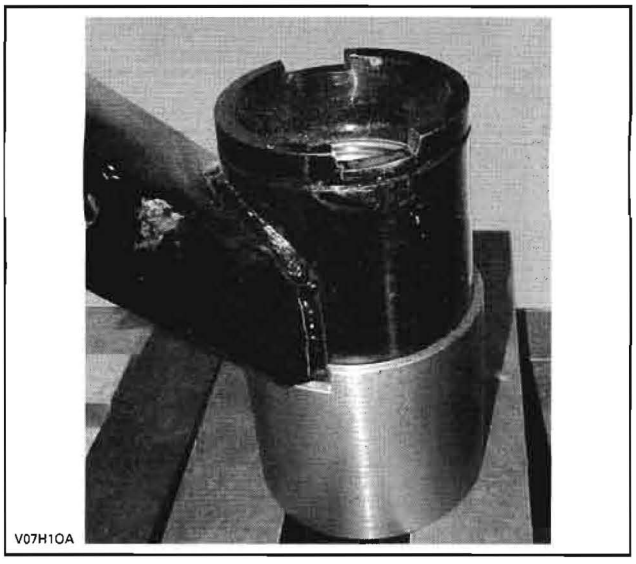

FRAME SIDE

Using a press and the proper bearing extractor/installer, remove the bearing.

LOCATION	TOOL
WHEEL SIDE	Bearing extractor/installer (P/N 529 035 918)
FRAME SIDE	Bearing extractor/installer (P/N 529 035 920)

www.midwestmanuals.com
Sales@midwestmanuals.com

www.midwestmanuals.com

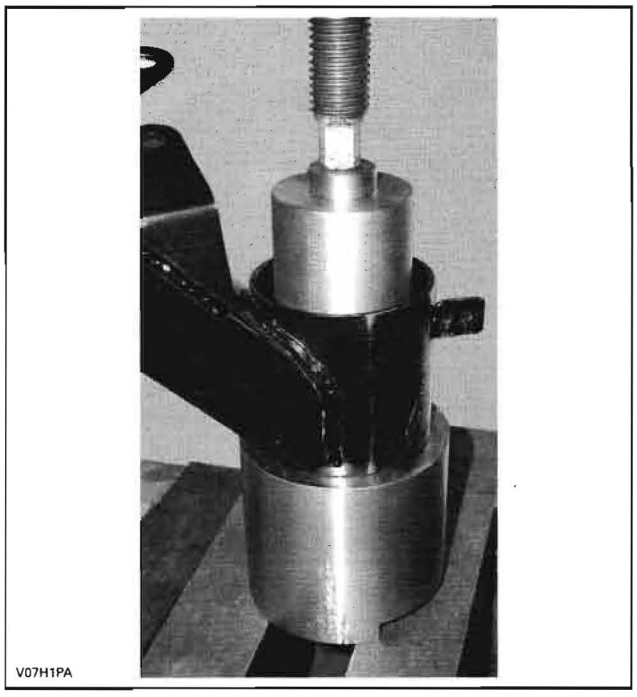

WHEEL SIDE

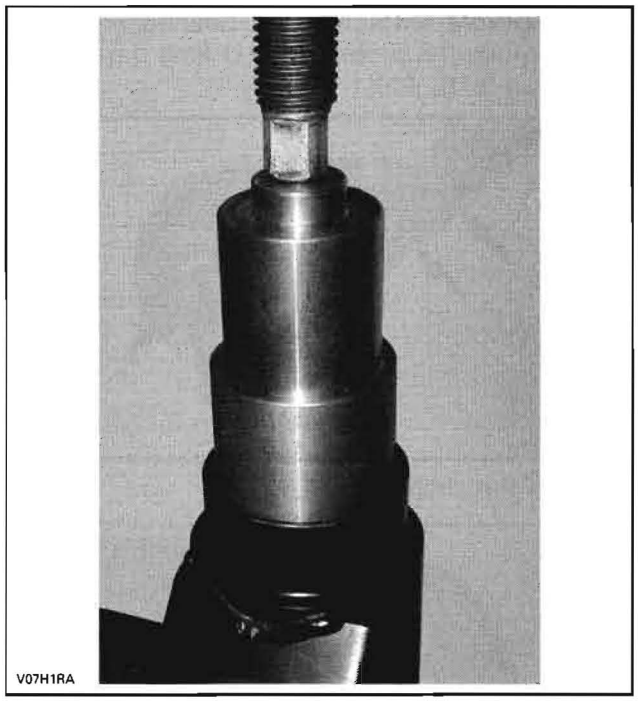

WHEEL SIDE

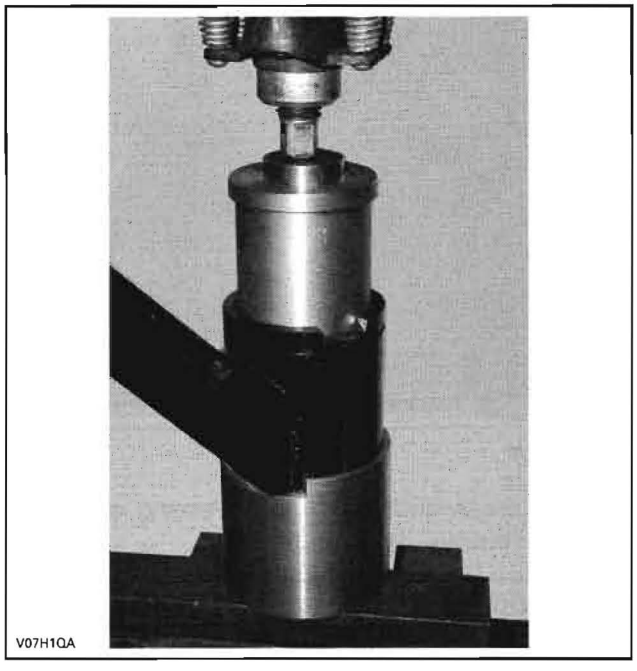

FRAME SIDE

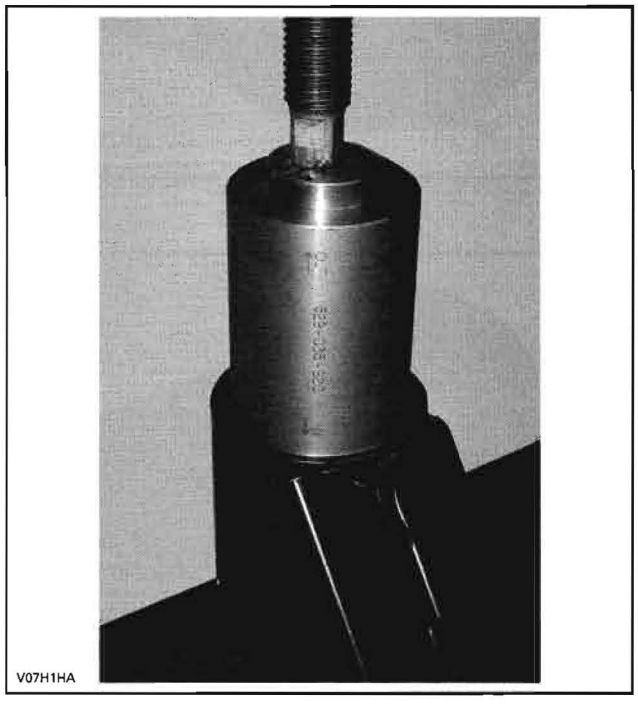

FRAME SIDE

Installation

Clean the bearing housing.

To install the bearing in its location, use the same tool as per removal procedure.

Install the circlip. If the circlip is slacked, replace it with a new.

Install all other removed parts.

www.midwestmanuals.com
Sales@midwestmanuals.com

www.midwestmanuals.com

FRONT AND REAR BRAKES

SERVICE TOOLS

Description	Part Number	Page
vacuum/pressure pump	529 021 800	370

SERVICE PRODUCTS

Description	Part Number	Page
dielectric grease	293 550 004	374, 377
XP-S synthetic grease	293 550 010	375, 380
GTLMA brake fluid	293 600 062	369

www.midwestmanuals.com
Sales@midwestmanuals.com

www.midwestmanuals.com

Outlander Series

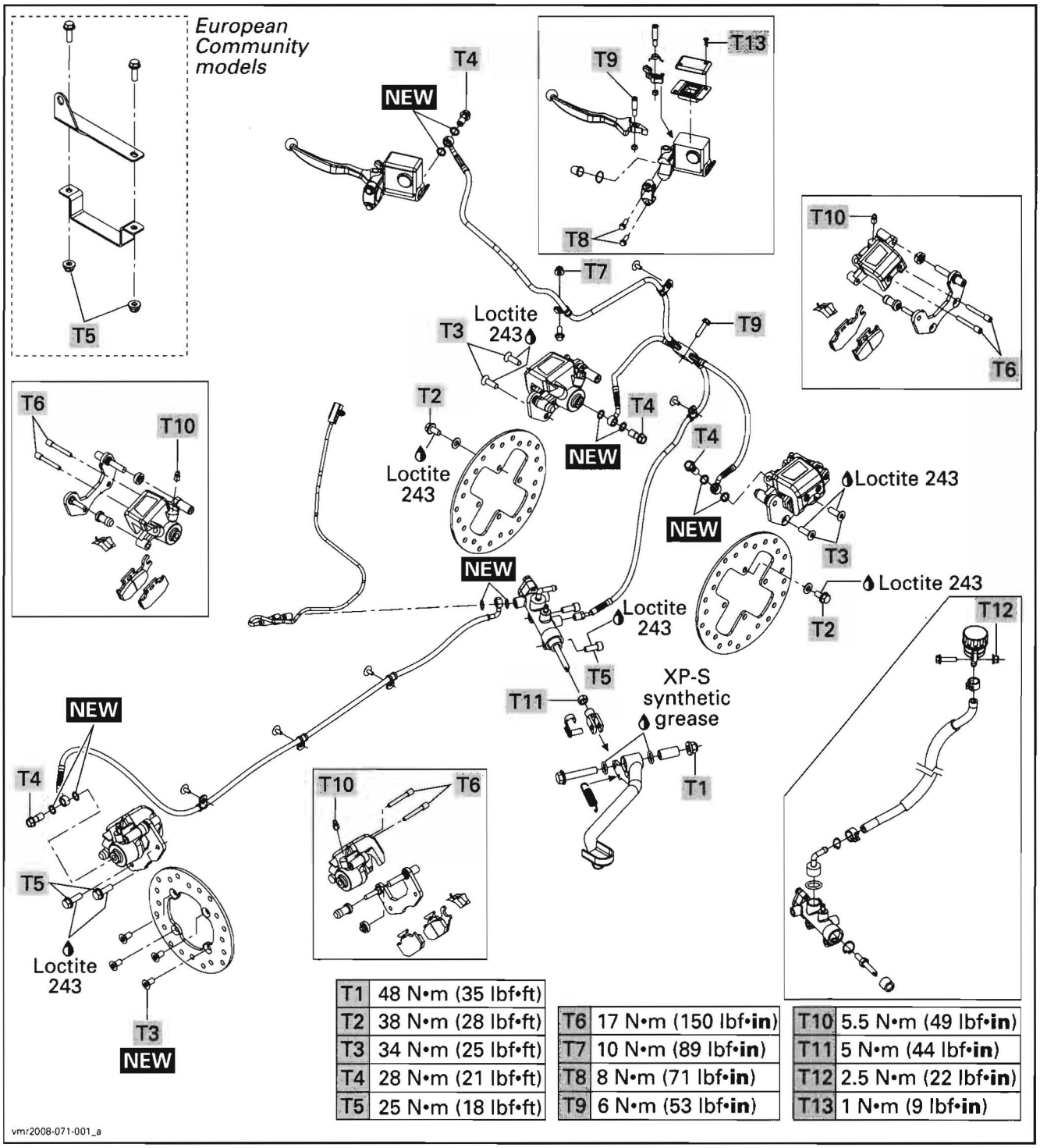

T1	48 N•m (35 lbf•ft)
T2	38 N•m (28 lbf•ft)
T3	34 N•m (25 lbf•ft)
T4	28 N•m (21 lbf•ft)
T5	25 N•m (18 lbf•ft)

T6	17 N•m (150 lbf•**in**)
T7	10 N•m (89 lbf•**in**)
T8	8 N•m (71 lbf•**in**)
T9	6 N•m (53 lbf•**in**)

T10	5.5 N•m (49 lbf•**in**)
T11	5 N•m (44 lbf•**in**)
T12	2.5 N•m (22 lbf•**in**)
T13	1 N•m (9 lbf•**in**)

vmr2008-071-001_a

www.midwestmanuals.com
Sales@midwestmanuals.com

www.midwestmanuals.com

Renegade Models (Front Brakes)

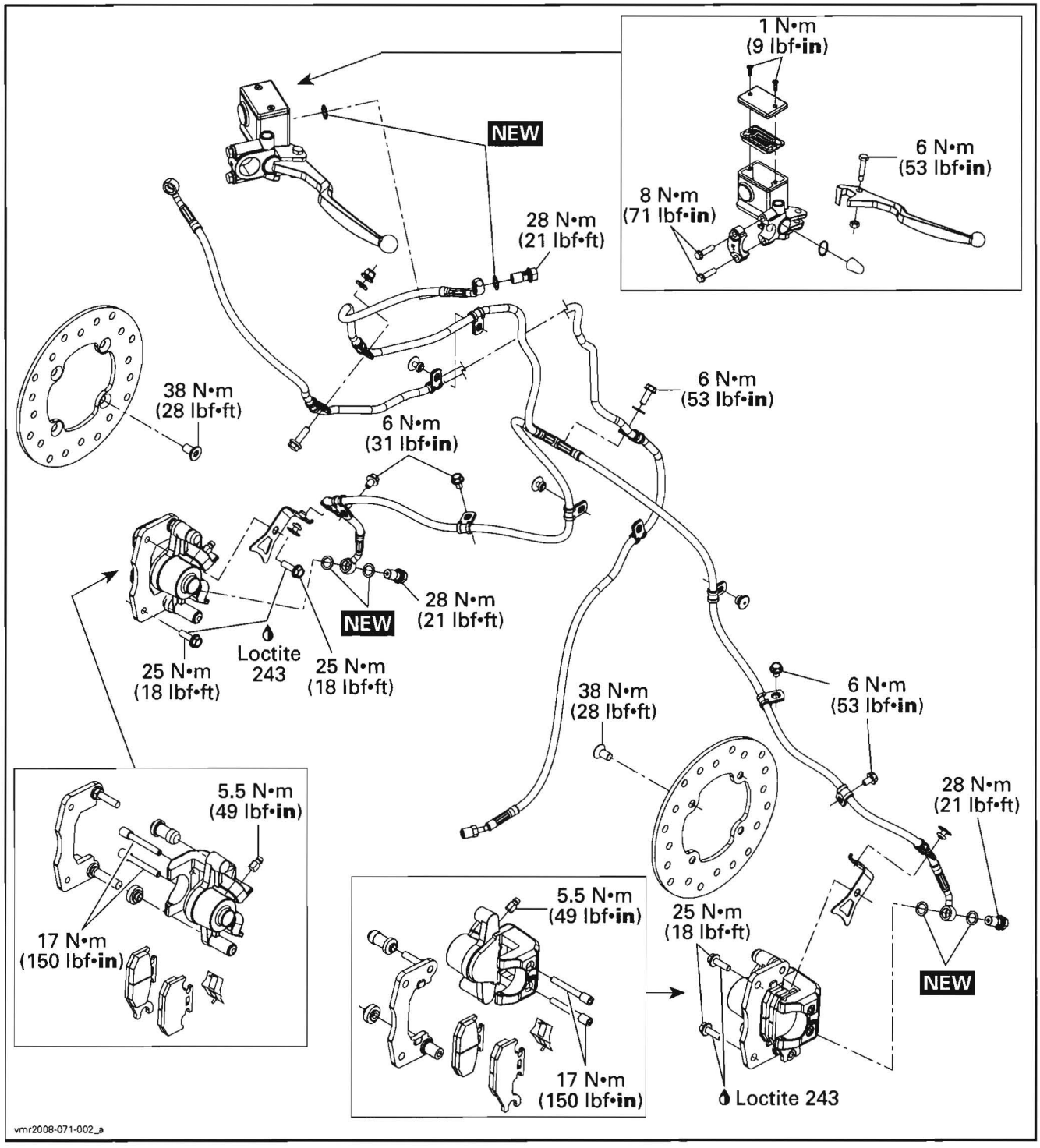

www.midwestmanuals.com
Sales@midwestmanuals.com

www.midwestmanuals.com

Renegade Models (Rear Brake)

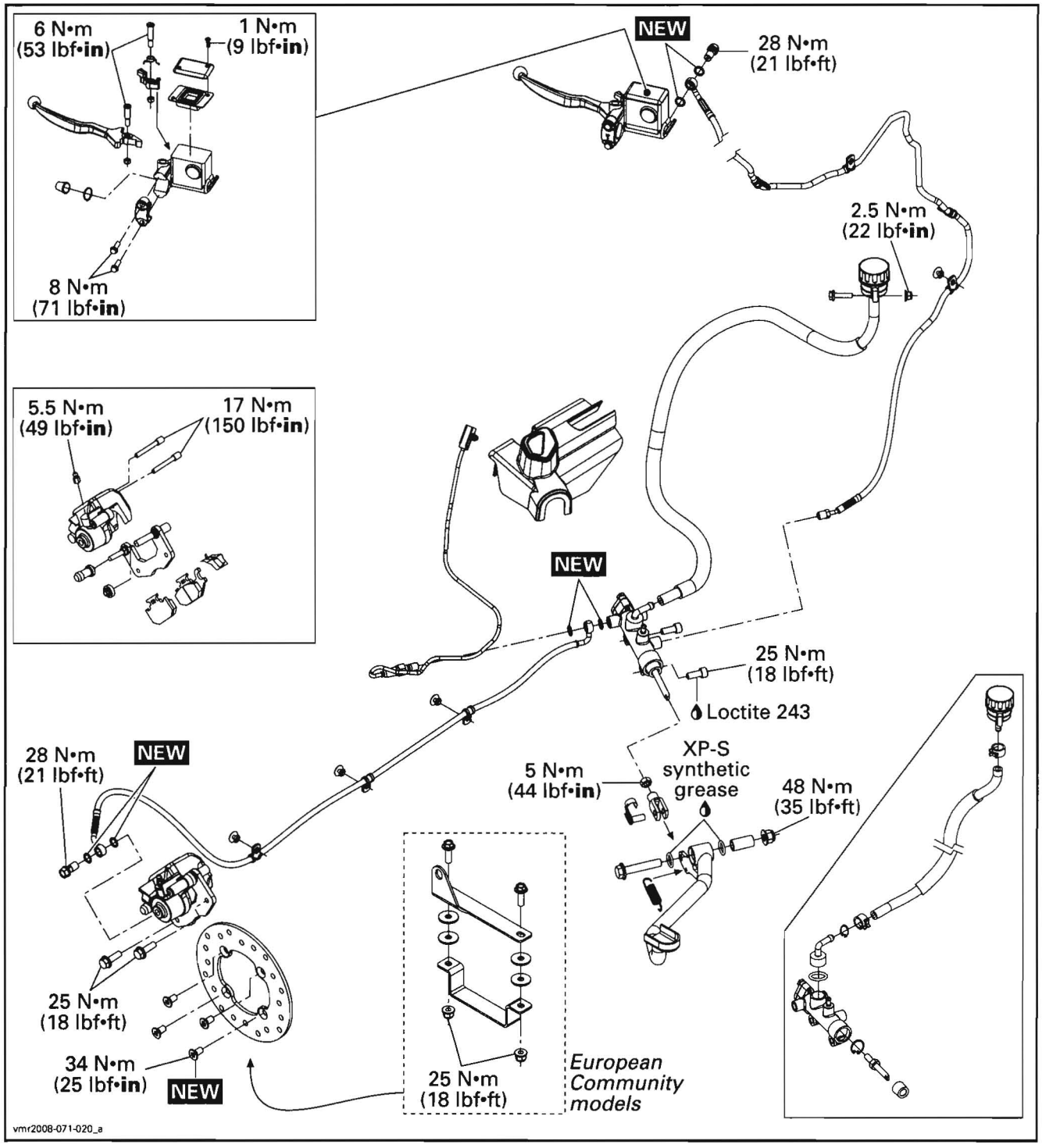

www.midwestmanuals.com
Sales@midwestmanuals.com

www.midwestmanuals.com

GENERAL

During assembly/installation, use the torque values and service products as in the exploded view(s).

Clean threads before applying a threadlocker. Refer to *SELF-LOCKING FASTENERS* and *LOCTITE APPLICATION* at the beginning of this manual for complete procedure.

⚠ WARNING

Torque wrench tightening specifications must strictly be adhered to.
Locking devices (e.g.: locking tabs, elastic stop nuts, cotter pins, etc.) must be replaced with new ones.

CAUTION: Avoid spilling brake fluid on plastic, rubber or painted parts. Protect these parts with a rag when servicing brake system.

CAUTION: To avoid serious damage to the brake system, use only DOT 4 brake fluid from a sealed container. Do not use brake fluid taken from old or already opened containers, nor mix different fluids for topping off.

CAUTION: Sealing washers must be discarded and replaced with new ones every time a Banjo fitting is unscrewed.

Hydraulic Brakes System

The brake system consists of two circuits. Each system has its own master cylinder and reservoir.

Both front and rear brakes are disc type.

⚠ WARNING

Periodically check the brake hoses for damages or leaks. Repair any damage before operating the vehicle.

Parking Brake

The parking brake operates all brakes. It is activated by a locking mechanism on LH brake lever.

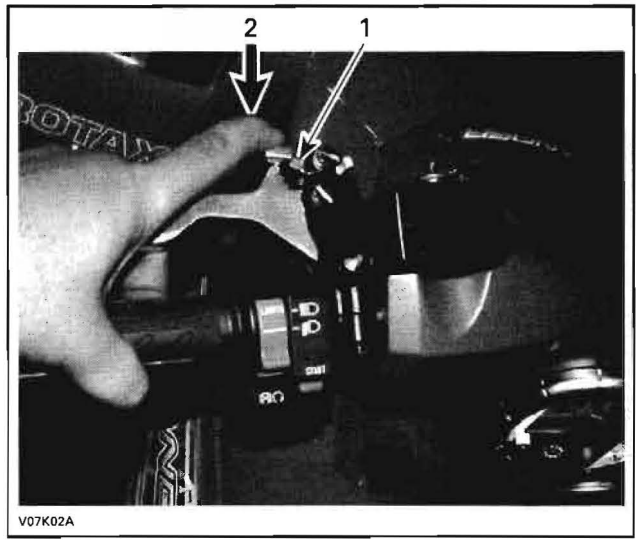

TYPICAL
1. LH brake lever
2. Press lever to activate parking brake

MAINTENANCE

BRAKE FLUID

Recommended Fluid

Always use brake fluid meeting the specification DOT 4 only such as GTLMA brake fluid (P/N 293 600 062) sold by BRP.

Fluid Level

With vehicle on a level surface, check brake fluid in reservoir for proper level. It should be above MIN. mark.

Clean filler cap before removing.

Add fluid as required. Do not overfill.

NOTE: A low level may indicate leaks or worn brake pads.

Front Brake Fluid Reservoir

Turn steering in the straight-ahead position to ensure reservoir is level. Check the brake fluid level, the reservoir is full when the fluid reaches the top of window.

www.midwestmanuals.com
Sales@midwestmanuals.com

www.midwestmanuals.com

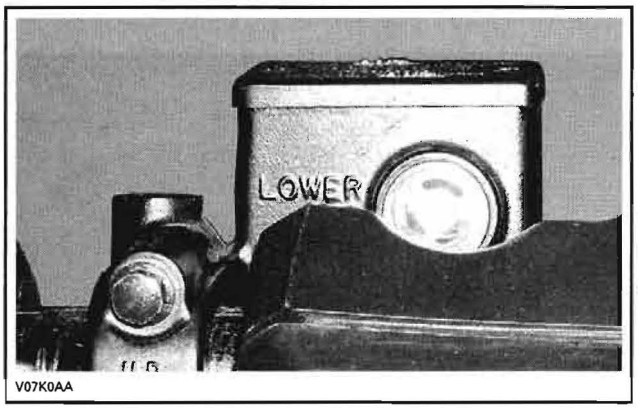

V07K0AA

Visually inspect lever boot condition. Check for cracks, tears, etc. Replace if damaged.

Rear Brake Fluid Reservoir

Outlander Series



vmo2006-007-017_a

UNDER FRONT ACCESS PANEL

Renegade Models

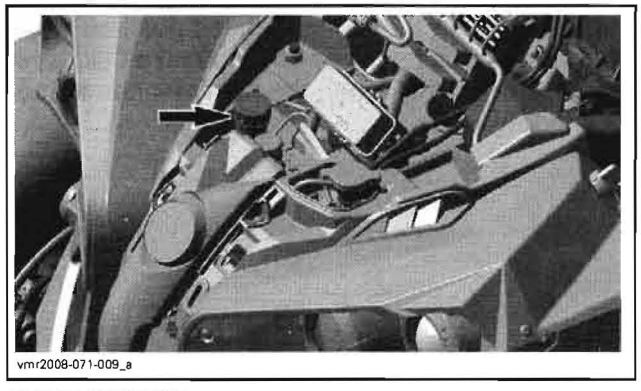
vmr2008-071-009_a

UNDER CONSOLE

Brake Fluid Replacement

⚠ WARNING

A contaminated brake disc or pad reduces stopping power. Discard contaminated pads and clean a contaminated disc with a high quality brake degreasing agent.

Brake Fluid Draining

Remove reservoir cover with its diaphragm.

Connect a clear hose to bleeding screw.

Loosen bleeding screw and pump brake lever(s) or brake pedal until no more fluid flows out of bleeding screw.

Brake Fluid Filling and Bleeding

Close bleeding screws.

Fill reservoirs with DOT 4 brake fluid.

Unscrew the bleeding screw on the top of rear master cylinder until brake fluid comes out then close it.

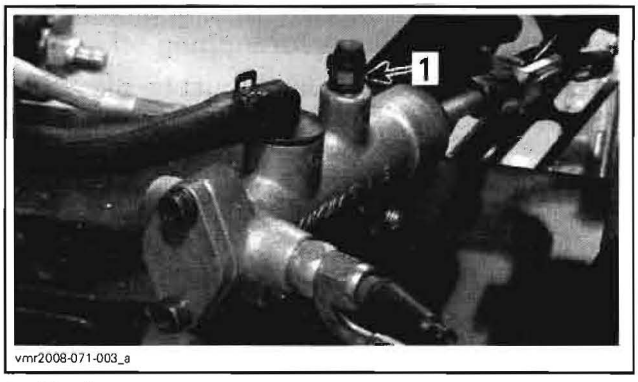

vmr2008-071-003_a

1. Bleeding screw

On each caliper, unscrew the bleeding screw until the brake fluid comes out then close it.

Bleed system as per the following procedure.

With a Vacuum Pump

Using a clear hose, install the vacuum/pressure pump (P/N 529 021 800) to bleeding screw. Place the pump in vacuum position. See the manufacturer's operating instructions.

Pump vacuum pump loosen bleeding screw. Close bleeding screw and refill reservoir when the fluid level is low.

NOTE: Check fluid level often to prevent air from being pumped into the system.

Repeat the procedure until no more air bubbles appear in hose.

www.midwestmanuals.com
Sales@midwestmanuals.com

www.midwestmanuals.com

NOTE: For the front brake system, switch to LH and RH caliper. Turn handlebar to full RH side when bleeding right caliper and turn to the LH side for the left caliper. This helps to reach air into the caliper. On **Outlander series**, the front and the rear brakes must be bled at the same time.

Close bleeding screw and operate brake lever or brake pedal. If it still feels spongy, bleed system again.

Repeat the procedures until air bubbles do not appear in hose and lever or pedal is stiff.

Fill reservoirs to the upper level with DOT 4 brake fluid.

Install diaphragms and covers on reservoirs.

Without a Vacuum Pump

If vacuum pump is not available, use the following procedure.

Install a clear hose to bleeding screw.

Open bleeding screw. Fill reservoirs and pump brake lever or brake pedal until fluid freely flows out of the hose.

Close bleeding screw.

Pump up system pressure with brake lever or brake pedal until lever or pedal resistance is felt.

Squeeze brake lever or depress brake pedal, open bleeding screw and then close it.

NOTE: Do not release brake lever or brake pedal until bleeding screw has been closed. For the front brake system, switch to LH and RH caliper. Turn handlebar to full RH side when bleeding right caliper and turn to the LH side for the left caliper. This helps to reach air into the caliper. On **Outlander series**, the front and the rear brakes must be bled at the same time.

Release brake lever or brake pedal slowly.

Repeat the procedure until no more air bubbles appear in hose and lever or pedal is stiff.

PROCEDURES

REAR BRAKE LIGHT SWITCH

Inspection

First ensure brake light is good.

Check brake light switch for dirt or corrosion. Make sure it is operating properly.

Depress brake pedal and check for brake light to turn on. Repeat with the brake lever(s).

Test

Outlander Series

Remove the LH footrest.

Renegade Models

Remove the master cylinder cover.

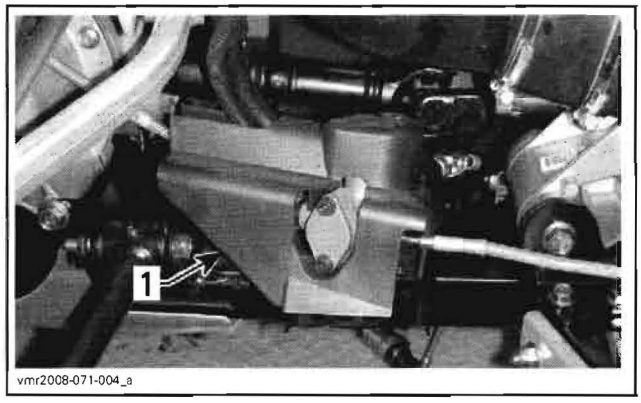

1. Master cylinder cover

All Models

Disconnect switch connector.

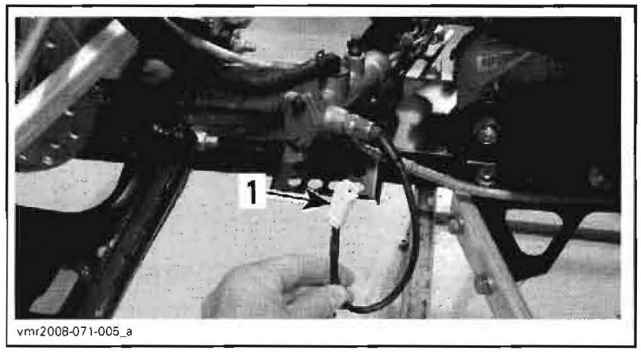

1. Switch connector

Check switch operation as follows.

OUTLANDER SERIES			
BRAKE LIGHT SWITCH POSITION	PIN		RESISTANCE
Firmly pushed	1	2	0.2 Ω max.
Released			Infinite (0L)
RENEGADE MODELS			
BRAKE LIGHT SWITCH POSITION	PIN		RESISTANCE
Firmly pushed	1	3	0.2 Ω max.
Released			Infinite (0L)

If switch is defective, replace with a new one.

If the switch tests good, verify wire continuity between harness connector and ECM.

www.midwestmanuals.com
Sales@midwestmanuals.com

www.midwestmanuals.com

ECM CONNECTOR PIN	HARNESS CONNECTOR WIRES	RESISTANCE
B-23	RED/ORANGE	Close to 0 Ω

Removal

The rear brake light switch is located on the rear master cylinder and it cannot be adjusted.

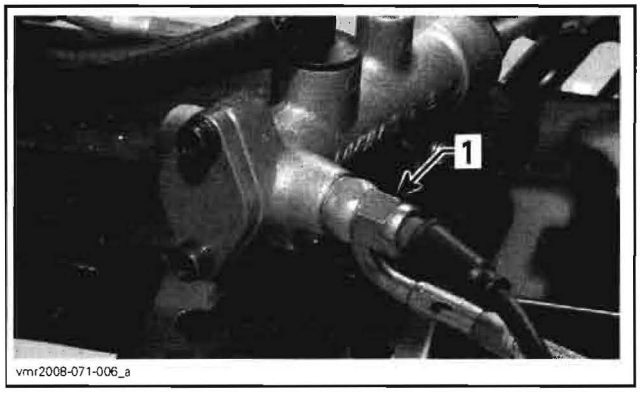

1. Brake light switch

Disconnect switch connector.

Drain brake system.

Unscrew brake light switch from master cylinder. Catch spilled fluid with a rag.

Discard sealing washers.

Installation

For installation, reverse the removal procedure.

Install two **NEW** sealing washers.

FRONT BRAKE LIGHT SWITCH

Renegade Models

Inspection

First, ensure bulb is not burnt.

Check brake light switch for dirt or corrosion. Make sure it is operating properly.

Depress front brake lever and check for brake light to turn on.

Test

Disconnect switch connectors.

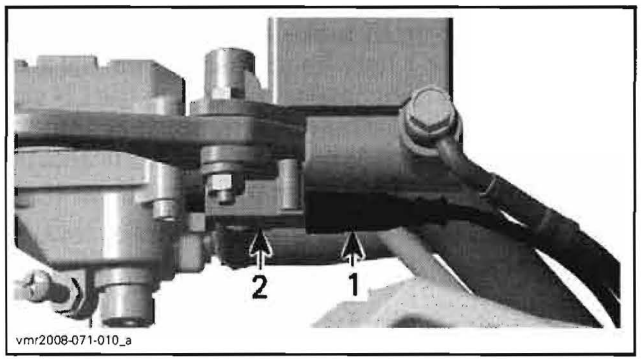

UNDERNEATH RH BRAKE LEVER
1. Switch connectors
2. Brake light switch

Check switch operation as follows.

BRAKE LIGHT SWITCH POSITION	PIN	RESISTANCE
Firmly pushed	Switch pins	0.2 Ω max.
Released		Infinite (0L)

If switch is defective, replace with a new one.

If the switch test good, verify wire continuity between brake light switch and ECM.

ECM CONNECTOR PIN	BRAKE LIGHT SWITCH PIN	RESISTANCE
B-23	RED/ORANGE	Close to 0 Ω

Removal

The front brake light switch is located underneath the RH brake lever and it cannot be adjusted.

Disconnect switch connectors.

Unscrew brake light switch from brake lever then remove it.

Installation

For installation, reverse the removal procedure.

Tighten switch screw to 1 N•m (9 lbf•**in**).

PARKING BRAKE MECHANISM

Removal

NOTE: The parking brake mechanism is located on the LH brake handle.

Unscrew nut under LH brake lever.

Remove screw, spring and brake lever lock.

www.midwestmanuals.com
Sales@midwestmanuals.com

www.midwestmanuals.com

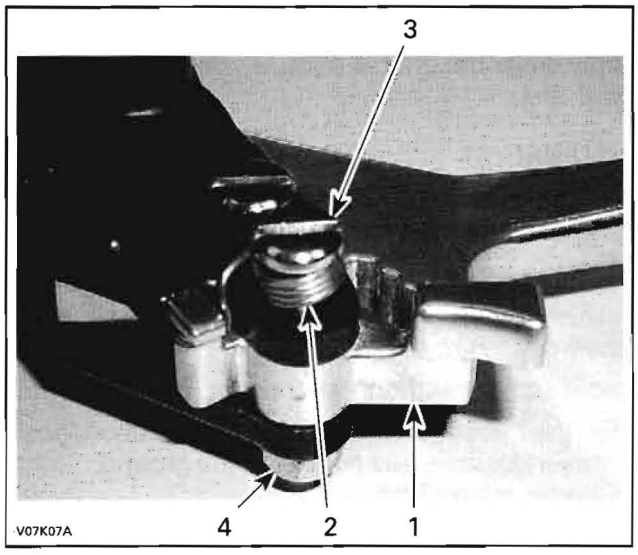

1. *Brake lever lock*
2. *Spring*
3. *Screw*
4. *Nut*

Installation

For installation, reverse the removal procedure.

See the following illustration to install the spring properly.

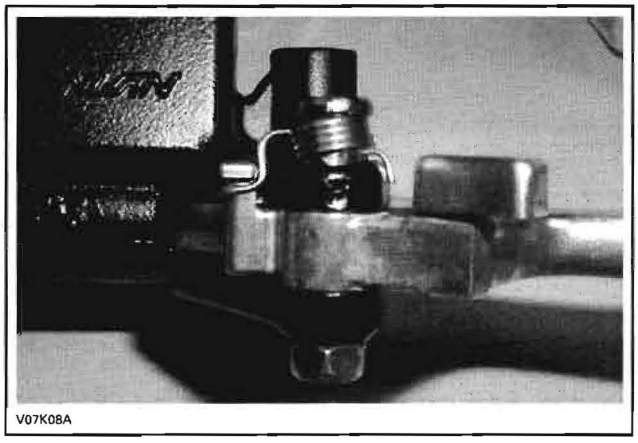

BRAKE LEVER

Removal

Remove the parking brake mechanism (LH brake handle only).

Unscrew the brake lever nut.

Remove the screw and the brake lever.

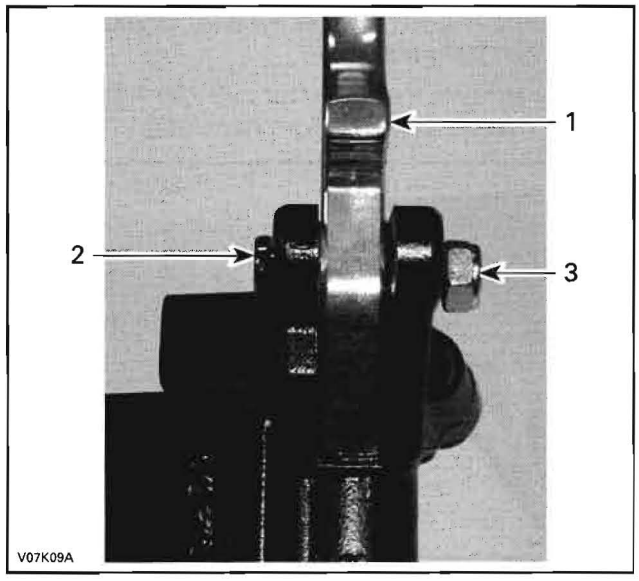

1. *Brake lever*
2. *Screw*
3. *Nut*

Inspection

Check brake lever for bending, cracks or other damages. Replace if necessary.

Installation

For installation, reverse the removal procedure.

FRONT MASTER CYLINDER

Removal

Remove master cylinder cover and its diaphragm then drain brake fluid until front master cylinder reservoir is empty.

Remove banjo fitting and sealing washers retaining brake hose to front master cylinder. Discard the sealing washers.

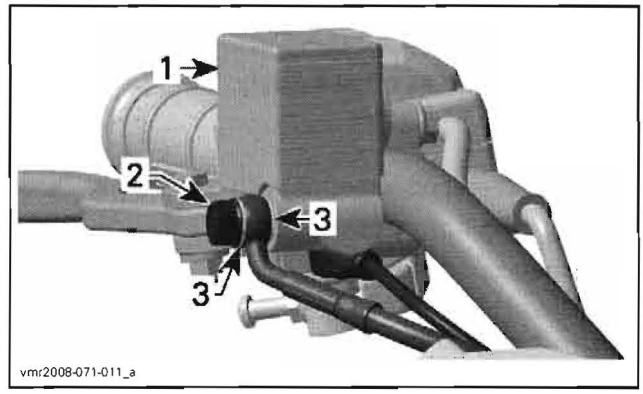

TYPICAL — RH MASTER CYLINDER SHOWN
1. *Front master cylinder*
2. *Banjo fitting*
3. *Sealing washers*

www.midwestmanuals.com
Sales@midwestmanuals.com

www.midwestmanuals.com

When removing RH master cylinder, unplug brake light switch connectors.

Remove screws from master cylinder holder and remove master cylinder from handlebar.

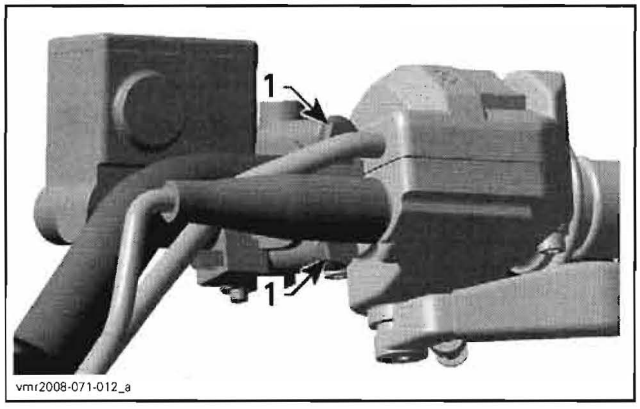

TYPICAL — RH MASTER CYLINDER SHOWN
1. Holder screws

Disassembly

Remove brake lever.

Remove piston boot, snap ring, piston and spring.

Inspection and Lubrication

Discard any remaining fluid inside reservoir.

Clean reservoir, piston and master cylinder thoroughly with clean brake fluid.

Check:
- boot for crack
- spring for damage
- piston cup for wear, deterioration or damages
- master cylinder and piston for scoring, scratches or other damages.

Change part(s) if necessary.

Check if the end cap O-ring is brittle, hard or damaged.

NOTE: If master cylinder housing is damaged or leaking, replace as an assembly.

Assembly

Coat piston and piston cups with clean brake fluid.

Install spring onto piston.

Install piston into master cylinder.

Install the snap ring into groove in the master cylinder.

Install boot into master cylinder and the groove in piston.

Apply dielectric grease (P/N 293 550 004) to the brake lever contacting surface of the piston.

Install brake lever and locking mechanism.

Apply dielectric grease (P/N 293 550 004) on lever pivot bolt.

Installation

For the installation, reverse the removal procedure, pay attention to the following details.

Place the brake lever assembly on the handlebar.

Position cylinder holding bracket with the UP mark upward.

Install screws and tighten loosely.

With the handlebar in straight ahead position, position cylinder reservoir parallel to the ground. Tighten upper screw first.

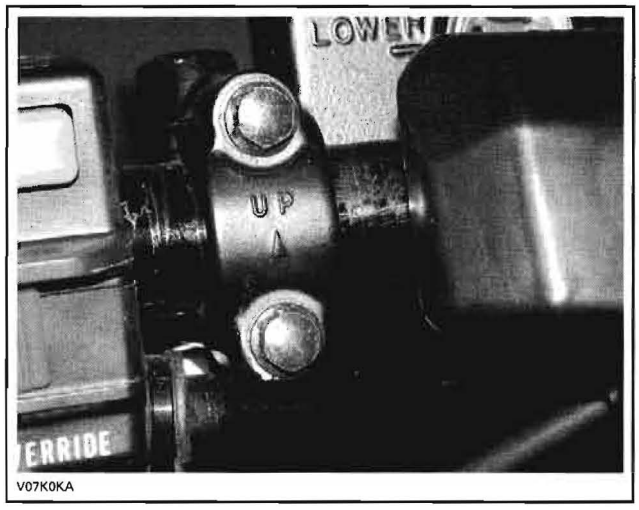

Connect brake hose to master cylinder with a Banjo fitting and **NEW** sealing washers.

Bleed brake system.

Check for leaks and make sure the brakes operate normally before driving.

REAR MASTER CYLINDER

Removal

Drain brake fluid.

Outlander Series

Remove LH and RH footrests.

Renegade Models

Remove the master cylinder cover.

All Models

Unplug brake switch connector.

NOTE: At this time, check hoses and fittings for damages or leaks.

www.midwestmanuals.com
Sales@midwestmanuals.com

www.midwestmanuals.com

Disconnect reservoir flexible hose and plug the end to avoid brake fluid spillage.

Unscrew brake light switch from master cylinder. Discard sealing washers.

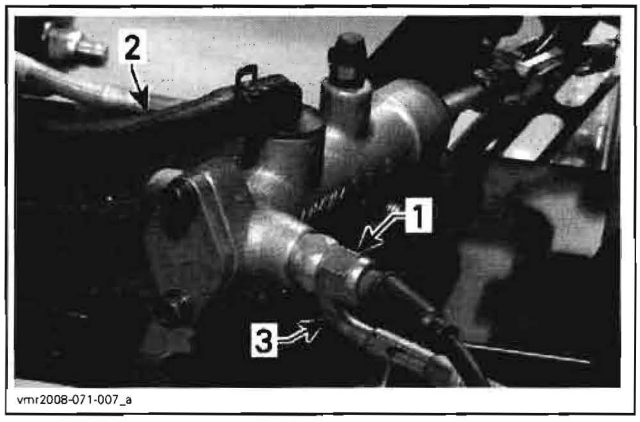

1. *Brake switch*
2. *Reservoir hose*
3. *Rear hose*

Unscrew front hose from master cylinder.

Unhook push rod from brake pedal.

Remove bolts retaining master cylinder to the frame.

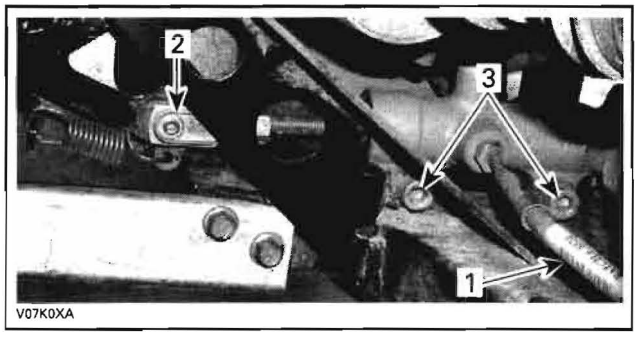

1. *Front hose*
2. *Push rod lock*
3. *Master cylinder bolts*

Disassembly

Remove the end cap, the spring and the piston.

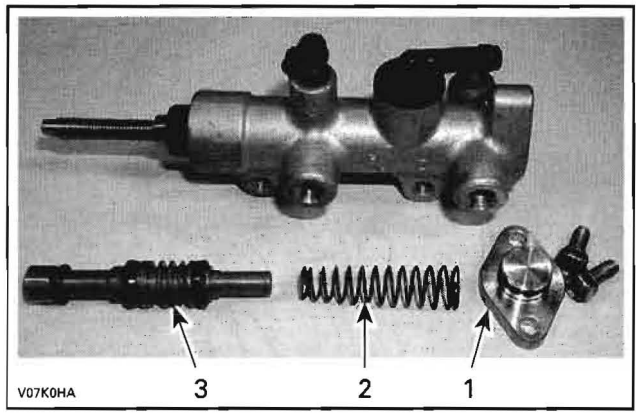

1. *End cap*
2. *Spring*
3. *Piston*

Remove the boot, the snap ring and the push rod.

Inspection and Lubrication

Discard any remaining fluid inside reservoirs.

Clean reservoirs, pistons and master cylinders thoroughly with clean brake fluid.

Check:
- boots for crack
- springs for damage
- piston cups for wear, deterioration or damages
- master cylinders and pistons for scoring, scratches or other damages.

Change part(s) if necessary.

Check the push rod lock for excessive wear, replace if necessary.

Check if the end cap O-ring is brittle, hard or damaged.

NOTE: If master cylinder housing is damaged or leaking, replace as an assembly.

Assembly

Apply XP-S synthetic grease (P/N 293 550 010) on both ends of push rod.

Install the push rod, the snap ring and the boot.

If push rod yoke has been removed, reinstall it then adjust push rod length, see the following illustration.

www.midwestmanuals.com
Sales@midwestmanuals.com

www.midwestmanuals.com

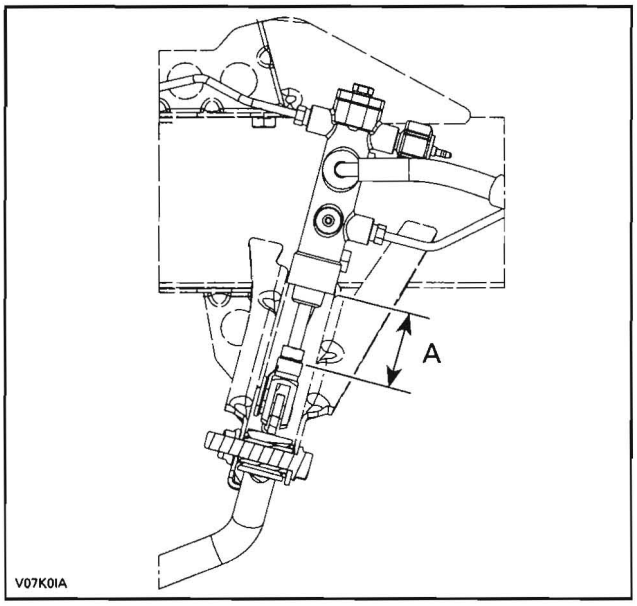

A. 44 ± 1 mm (1.732 ± .039 in)

Coat piston and piston cups with clean brake fluid.

The spring is conical. Install the smaller end on piston.

Insert piston in the master cylinder.

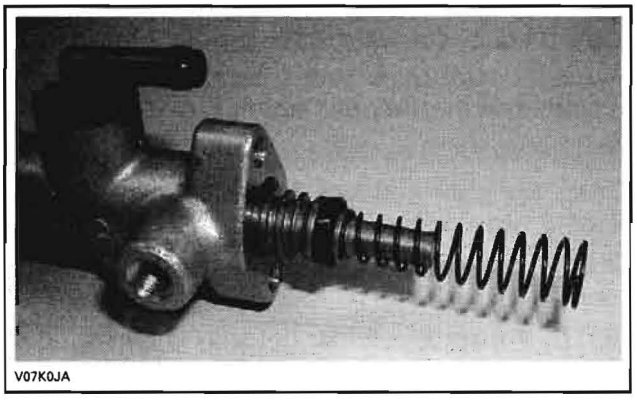

Install the end cap. Do not forget the O-ring.

Installation

Install master cylinder to frame.

Hook push rod on brake pedal.

Connect front hose on master cylinder.

Connect reservoir flexible hose.

Install the rear hose and the brake light switch with two **NEW** sealing washers.

Connect brake light switch connector.

Fill up reservoir with clean brake fluid.

Bleed brake system.

Check for leaks and make sure the brakes operate normally before driving.

CALIPER

Removal

Loosen wheel nuts.

Raise vehicle and support it securely.

Remove appropriate wheel.

Remove the caliper screws then the caliper. If the caliper is not being removed from the vehicle as during brake pad replacement, simply hang the caliper with a piece of wire to take the weight off the brake hose.

CAUTION: Do not let caliper hangs by the hose and do not stretch or twist the hose.

If the caliper is being removed for replacement, drain brake system before removing the Banjo fitting and its sealing washers. Remove the caliper from the vehicle.

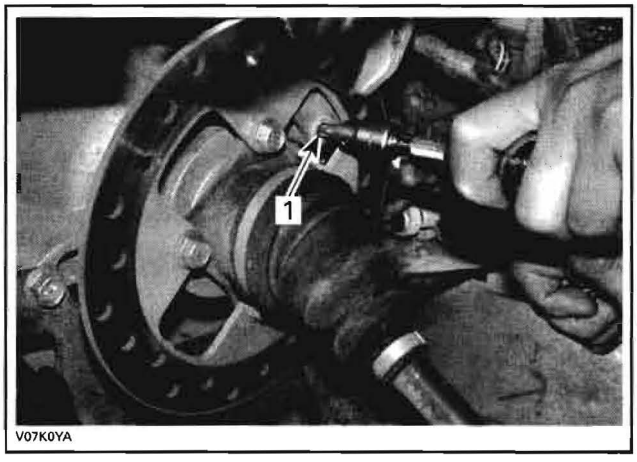

FRONT CALIPER — OUTLANDER SERIES
1. Retaining screw

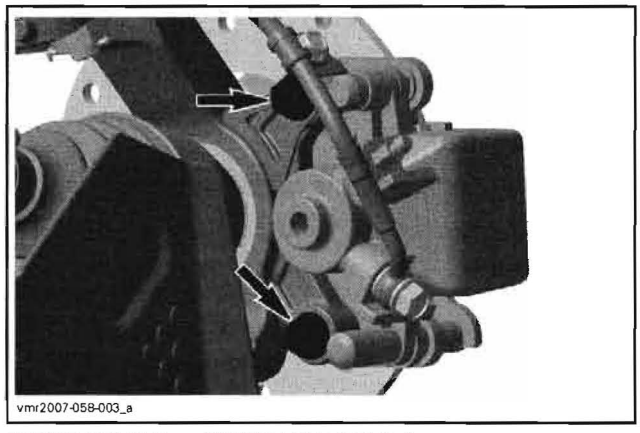

FRONT CALIPER — RENEGADE MODELS

www.midwestmanuals.com
Sales@midwestmanuals.com

www.midwestmanuals.com

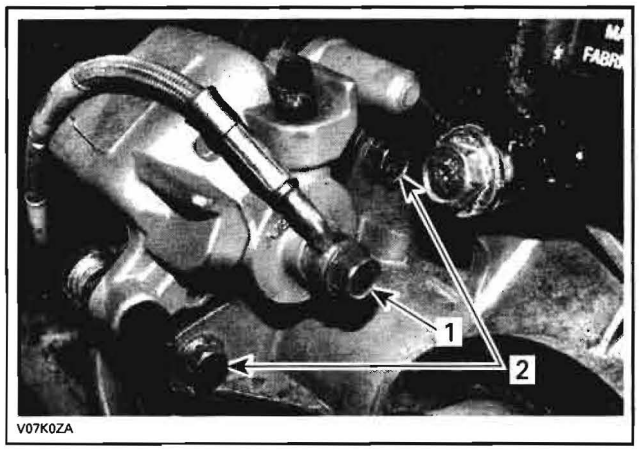

REAR CALIPER — ALL MODELS
1. *Remove banjo fitting and sealing washers*
2. *Unscrew bolts*

Catch spilled fluid with a rag. Attach the brake hose in a position to prevent the fluid from flowing out.

Discard all sealing washers.

Disassembly

Remove brake pads, see further in this section.

Remove slide caliper support and pad spring.

Place rag over piston.

Place caliper body with piston down and apply small squirts of air pressure to the fluid inlet to remove piston.

⚠ WARNING

Do not use high pressure air or bring nozzle too close to inlet.

Remove piston seal.

CAUTION: Be careful not to damage piston sliding surface.

Clean piston grooves, caliper cylinder and piston with clean brake fluid.

Clean slide pins with brake cleaner and a rag.

Inspection

If boots are deteriorated or hard, replace the caliper.

Check caliper cylinder for scratches, rust or other damages. If so, replace caliper.

Check piston for scratches, rust or other damages. If so, replace caliper.

Assembly

Coat piston seal with clean brake fluid and install it into piston grooves in caliper.

Coat piston with clean brake fluid and install into cylinder with the closing toward caliper body.

Apply dielectric grease (P/N 293 550 004) into sliding bores and install slide pins.

NOTE: Make sure that rubber boots are correctly installed in slide pins grooves.

Install pad spring, caliper bracket and pads.

Installation

For the installation, reverse the removal procedure, pay attention to the following details.

Use **NEW** sealing washers when installing banjo fitting retaining brake hose to caliper.

Install caliper in its original position.

Torque screws in accordance with the following table.

MODELS	TORQUE
OUTLANDER SERIES	34 N•m (25 lbf•ft)
RENEGADE MODELS	24 N•m (17 lbf•ft)

Bleed the brake system.

Check for leaks and make sure the brakes operate normally before driving.

BRAKE PADS

Removal

Raise vehicle and support it securely.

Remove appropriate wheel.

Loosen pad pins.

www.midwestmanuals.com
Sales@midwestmanuals.com

www.midwestmanuals.com

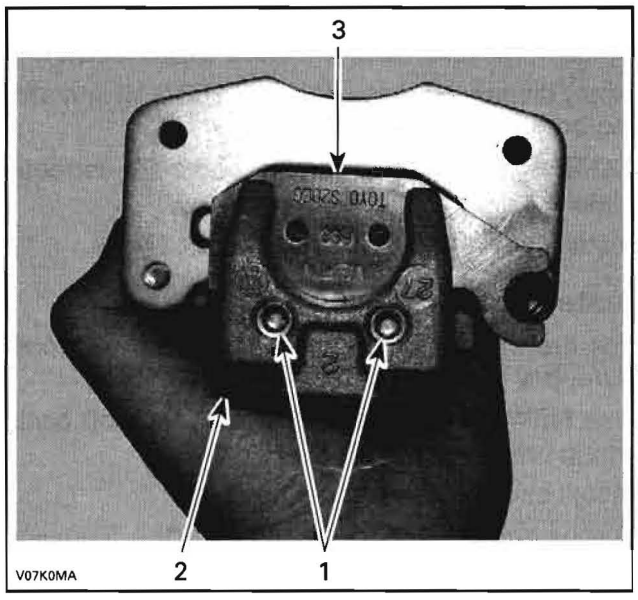

1. *Pad pins*
2. *Caliper*
3. *Pad*

Remove caliper from its support or from knuckle.

Unscrew pad pins then remove pads. Discard pad pins.

CAUTION: Do not let the caliper hang by the hose and do not stretch or twist the hose.

Inspection

CAUTION: Do not clean brake pads in petroleum based solvent. Use brake system cleaner only. Soiled brake pads must be replaced with new ones.

Measure brake pad lining thickness.

Brake pads must be replaced when lining is 1 mm (1/32 in) thick or less, or look the hollow places on both sides on the pad lining.

There are four hollow places on one set of brake pads. When the pad wear reaches one of the hollow places, the pad must be changed even if the pad wear does not reach another hollow place.

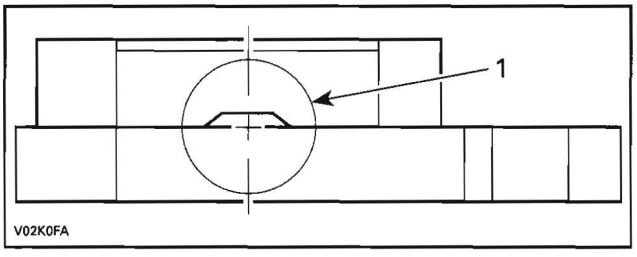

1. *Hollow place*

BRAKE PAD MINIMUM THICKNESS	1 mm (1/32 in)

⚠ WARNING

Avoid getting oil or grease on brake pads. Contaminated brake pads can affect stopping capacities.

CAUTION: Brake pads must always be replaced in pairs.

Installation

Clean the visible portion of piston with clean brake fluid.

Push caliper pistons inward before installing brake pads.

NOTE: Use a C-clamp or another suitable tool. To avoid damaging the piston, use an old pad to push it into the caliper.

Make sure that pad spring is in position.

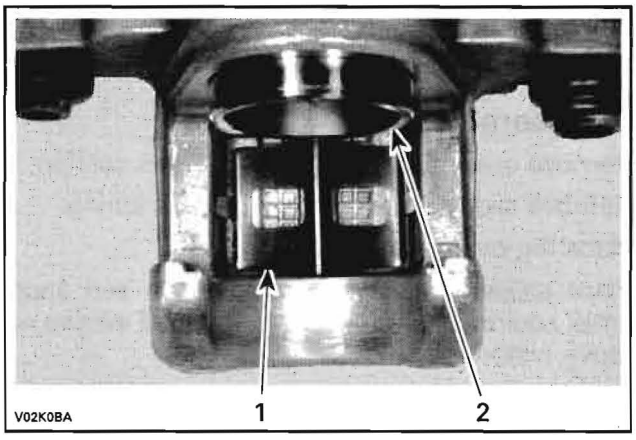

1. *Pad spring*
2. *Piston*

Install new brake pads.

Install **NEW** pad pins by pushing in the pads against pad spring to align pad slots in the pads and caliper body.

Install brake caliper so the disc is positioned between pads.

NOTE: Be careful not to damage pads and make sure pads are correctly inserted in their location.

After the job is completed, firmly depress the brake lever a few times to bring the pads in contact with the disc.

Check for leaks and make sure the brakes operate normally before driving. The pads must rest flat on the disk.

www.midwestmanuals.com
Sales@midwestmanuals.com

www.midwestmanuals.com

BRAKE DISC

Inspection

Brake discs can be inspected without removing them from the vehicle.

Raise vehicle and support it securely. Remove wheels and visually inspect disc surfaces for scratches or grooves. Make sure to check both sides of disc.

Measure thickness of the disc.

DISC MINIMUM THICKNESS	
FRONT	3.5 mm (.138 in)
REAR	4.3 mm (.170 in)

Replace disc if not within specifications.

CAUTION: Brake discs should never be machined.

Turn the disc by hand and check warpage.

MAXIMUM DISC WARPAGE	
FRONT	0.2 mm (.01 in)
REAR	

Removal

Front Brake Disc

Outlander Series

Apply parking brake and raise the front of the vehicle.

Remove the appropriate wheel.

Remove wheel hub. Refer to *FRONT DRIVE*.

On **Outlander 650 and 800 series**, remove the shock absorber.

Separate knuckle from lower A-arm.

Remove drive shaft from knuckle.

Attach upper A-arm or strut out of way.

Unscrew brake disc screws.

Keep the Belleville washers.

Release parking brake and remove caliper. Suspend caliper out of the way.

CAUTION: Do not let the caliper hang by the hose and do not stretch or twist the hose.

Remove brake disc. Pay attention not to cut the CV boot.

Renegade Models

Remove appropriate wheel.

Remove caliper as described previously. Do not disconnect brake hose from caliper.

After removing the caliper, suspend it out of the way.

CAUTION: Do not let the caliper hang by the hose and do not stretch or twist the hose.

Remove wheel hub with brake disc. Refer to *FRONT DRIVE*.

Heat up brake disc around screw to break the threadlocker. Remove and discard brake disc screws.

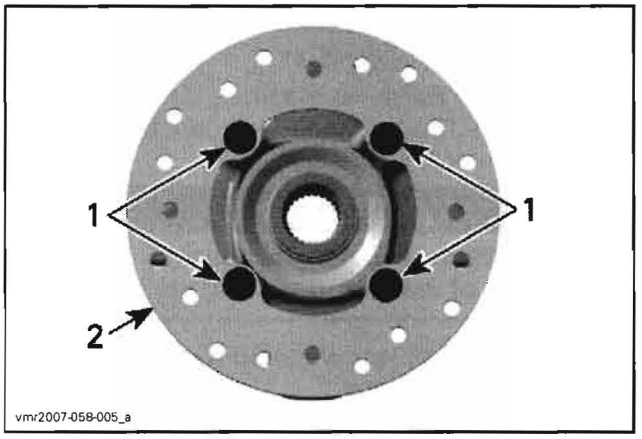

1. Brake disc screws
2. Brake disc

Rear Brake Disc

Remove rear wheels.

Remove the caliper and suspend it out of the way.

CAUTION: Do not let the caliper hang by the hose and do not stretch or twist the hose.

Unscrew and remove the rear propeller shaft screw from differential.

Remove the differential protector.

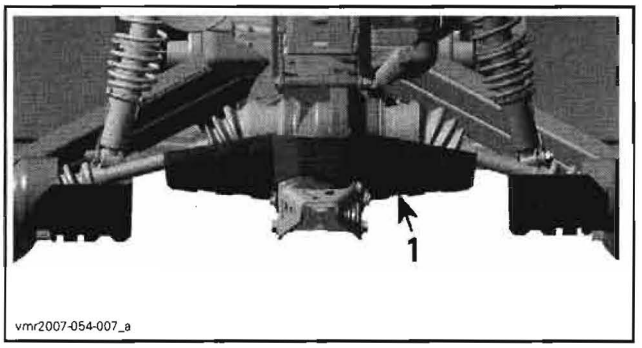

1. Differential protector

Remove the differential bolts.

Loosen hitch plate bolts.

Move the differential backward.

Disconnect propeller shaft from differential.

www.midwestmanuals.com
Sales@midwestmanuals.com

www.midwestmanuals.com

Unscrew brake disc screws. Heat up brake disc around screws to facilitate removal. Discard brake disc screws.

Installation

Front Brake Disc

Renegade Models

The installation is the reverse of the removal procedure.

Outlander Series

The installation is the reverse of removal procedure. However, pay attention to the following details.

Do not forget Belleville washers when installing brake disc screws. Place the concave side of washers towards brake disc.

⚠ WARNING

Never substitute Belleville washer with another type of washer (flat, lock, etc.).

Tighten brake disc screws to 38 N•m (28 lbf•ft) in a criss-cross sequence.

Rear Brake Disc

All Models

Install brake disc on propeller shaft and tighten NEW screws to 34 N•m (25 lbf•ft) in a criss-cross sequence.

BRAKE PEDAL

Removal

Remove RH footwell.

Detach the return spring from the brake pedal.

Open the master cylinder push rod hook.

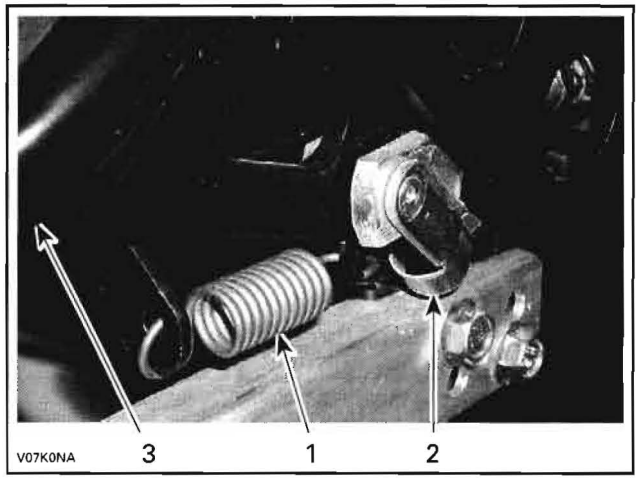

1. Return spring
2. Push rod hook
3. Brake pedal

Remove bolt retaining the brake pedal to frame.

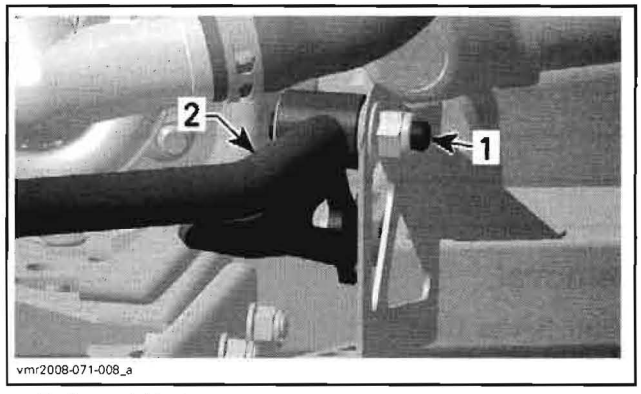

1. Brake pedal bolt
2. Brake pedal

Inspection

Check brake pedal for cracks or distortion.

Check if O-rings are brittle, hard or otherwise damaged.

Replace any defective parts.

Installation

For installation, reverse the removal procedure.

Apply XP-S synthetic grease (P/N 293 550 010) on both O-rings and into brake pedal.

BRAKE HOSES

Inspection

Brake hoses should be inspected frequently for leaks and damages.

Check if the hoses are crushed or damaged. Any deformation can restrict the proper flow of fluid and cause braking problems.

www.midwestmanuals.com
Sales@midwestmanuals.com

www.midwestmanuals.com

Check hoses for cracking or scrapes. This damage can cause hose failure under pressure.

When hoses are removed or disconnected, cleanliness must be observed. Clean all joints and connections before disassembly. New hoses should be cleaned with brake fluid before installation to remove any contamination.

Replace any defective parts.

Removal

NOTE: Before removing any hoses, drain brake system.

Remove all necessary parts to reach the hoses.

Thoroughly clean the area around the joints that will be disconnected.

Place a drain pan under the joint that will be disconnected.

Disconnect any retaining clips or brackets holding the hose and remove the defective part(s).

Installation

Install the new hose.

Make sure the piece will not rub against any other part.

When there is a banjo fitting securing the hose to the caliper or to the master cylinder, always replace the sealing washers with new ones.

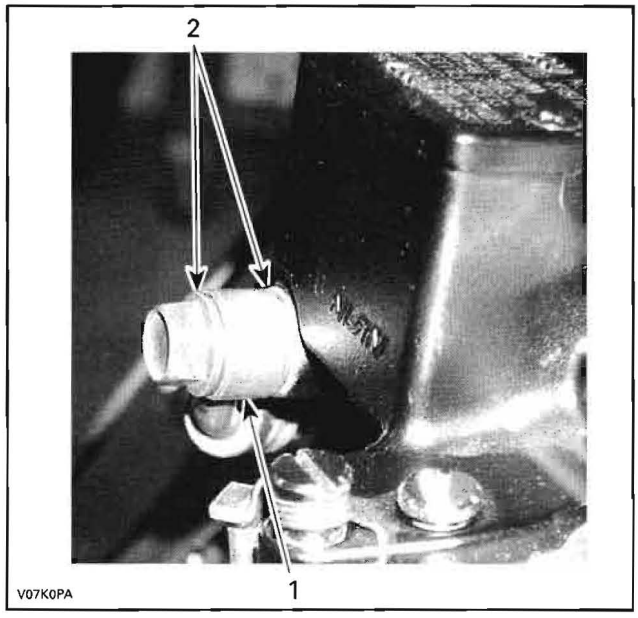

FRONT MASTER CYLINDER SHOWN
1. *Banjo fitting*
2. *Sealing washers*

Install any retaining clips or brackets.

Refill and bleed the system.

www.midwestmanuals.com
Sales@midwestmanuals.com

www.midwestmanuals.com

www.midwestmanuals.com
Sales@midwestmanuals.com

www.midwestmanuals.com

BODY

SERVICE TOOLS

Description	Part Number	Page
pliers Oetiker 1099	295 000 070	393



sales@midwestmanuals.com
www.midwestmanuals.com

www.midwestmanuals.com
Sales@midwestmanuals.com

www.midwestmanuals.com

OUTLANDER SERIES

Body Parts (Front View)

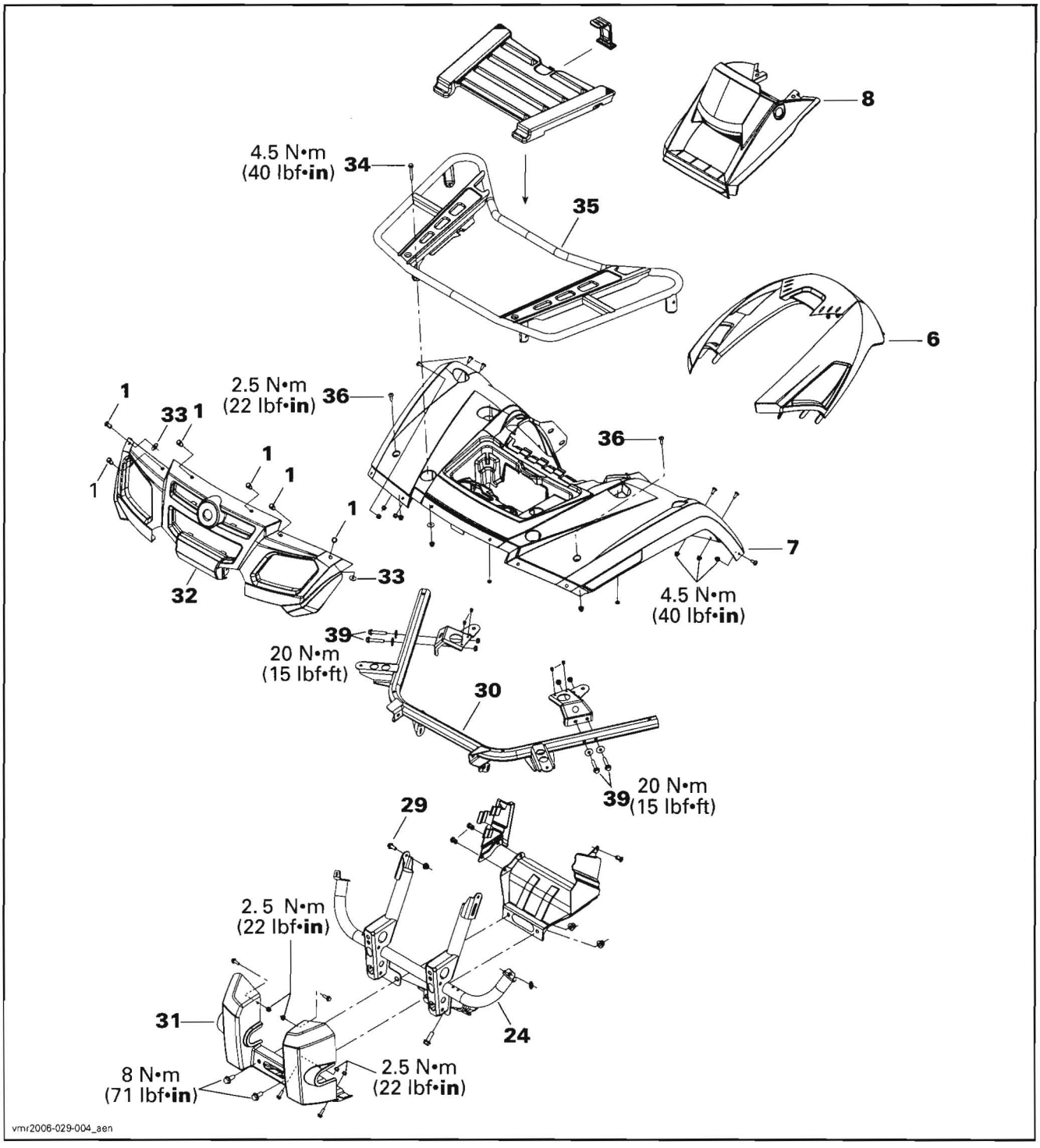

www.midwestmanuals.com
Sales@midwestmanuals.com

www.midwestmanuals.com

Body Parts (Rear View)

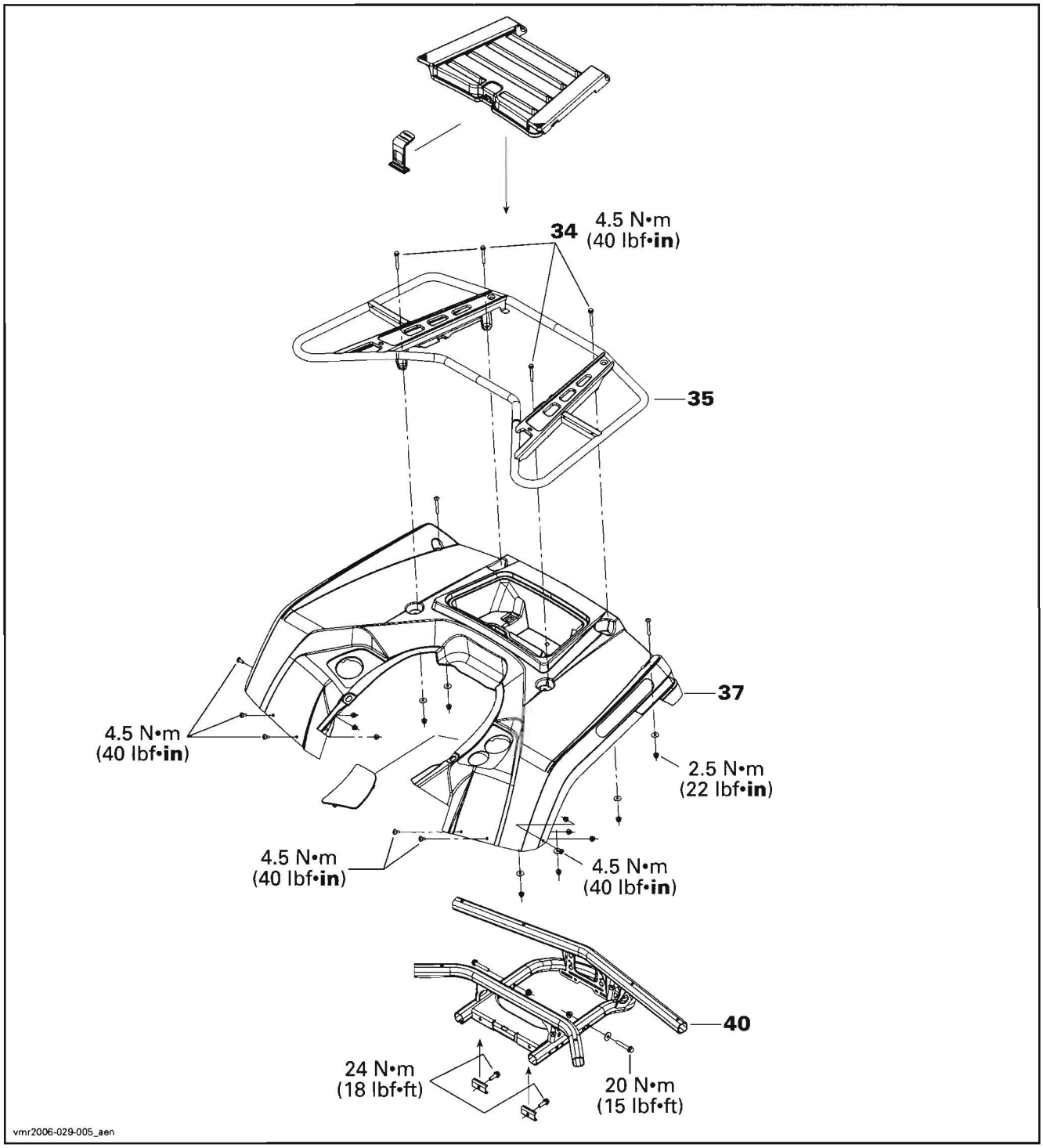

www.midwestmanuals.com
Sales@midwestmanuals.com

www.midwestmanuals.com

Body Parts (Side View)

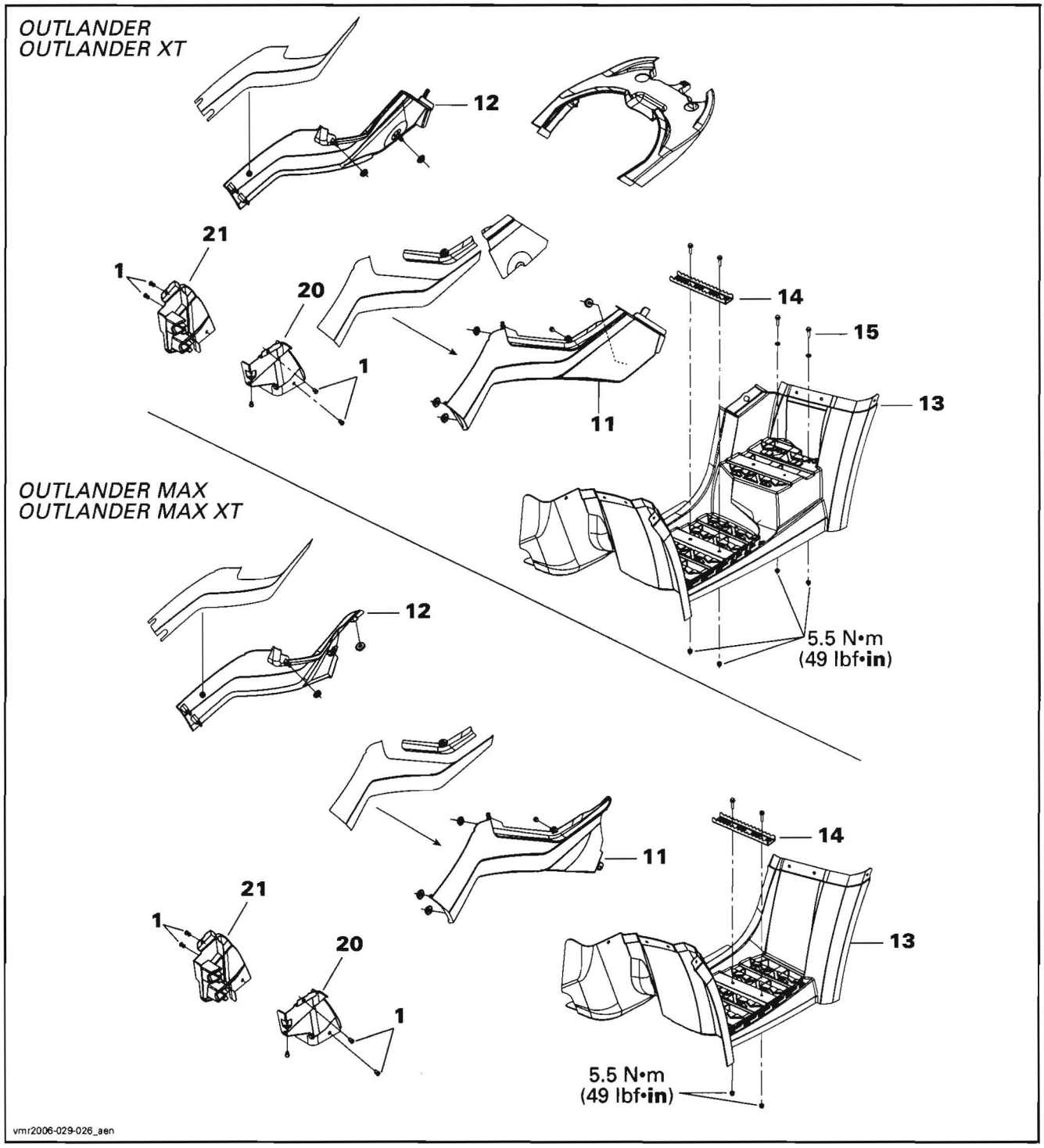

www.midwestmanuals.com
Sales@midwestmanuals.com

www.midwestmanuals.com

Seat

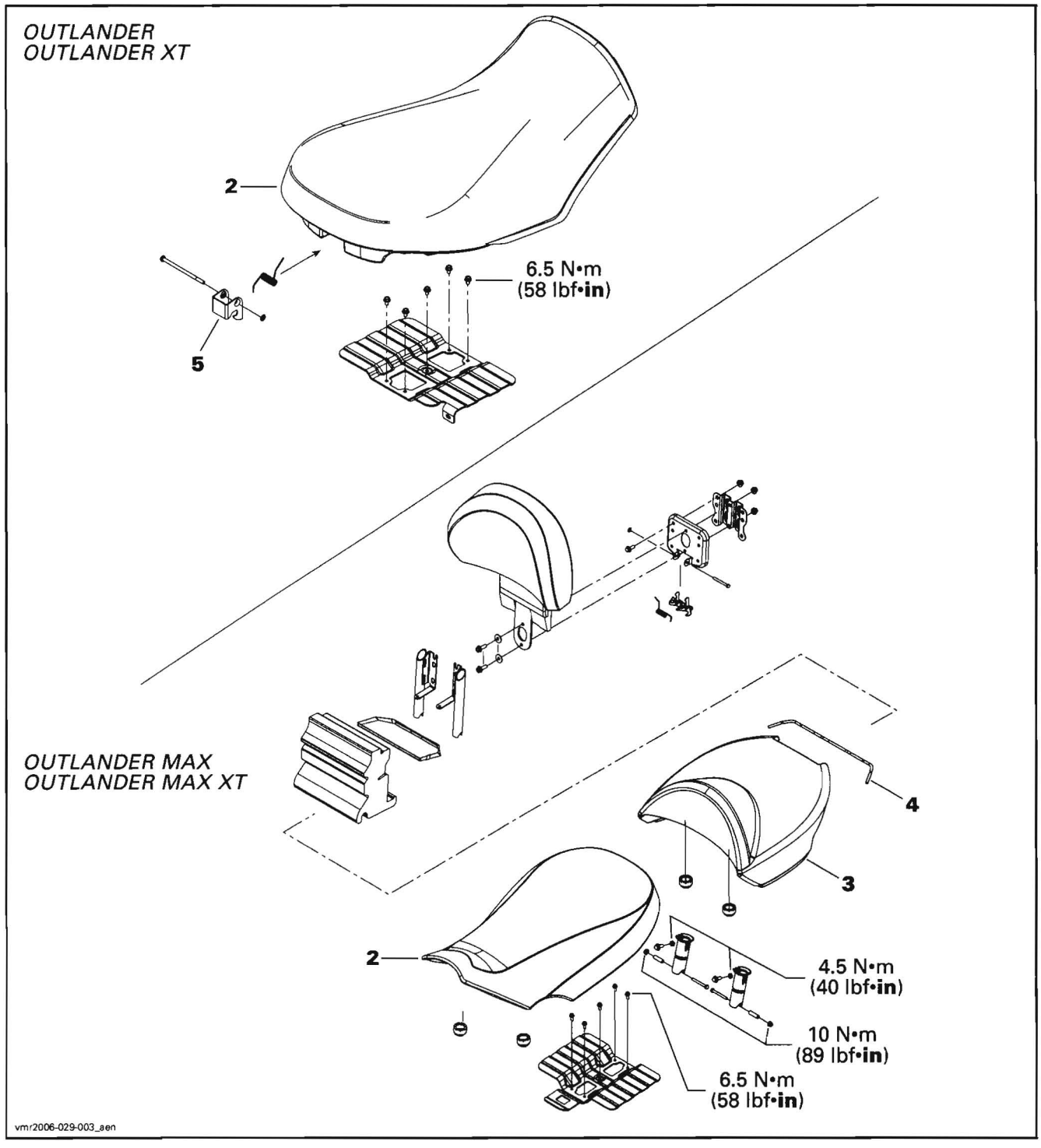

www.midwestmanuals.com
Sales@midwestmanuals.com

www.midwestmanuals.com

XT Package

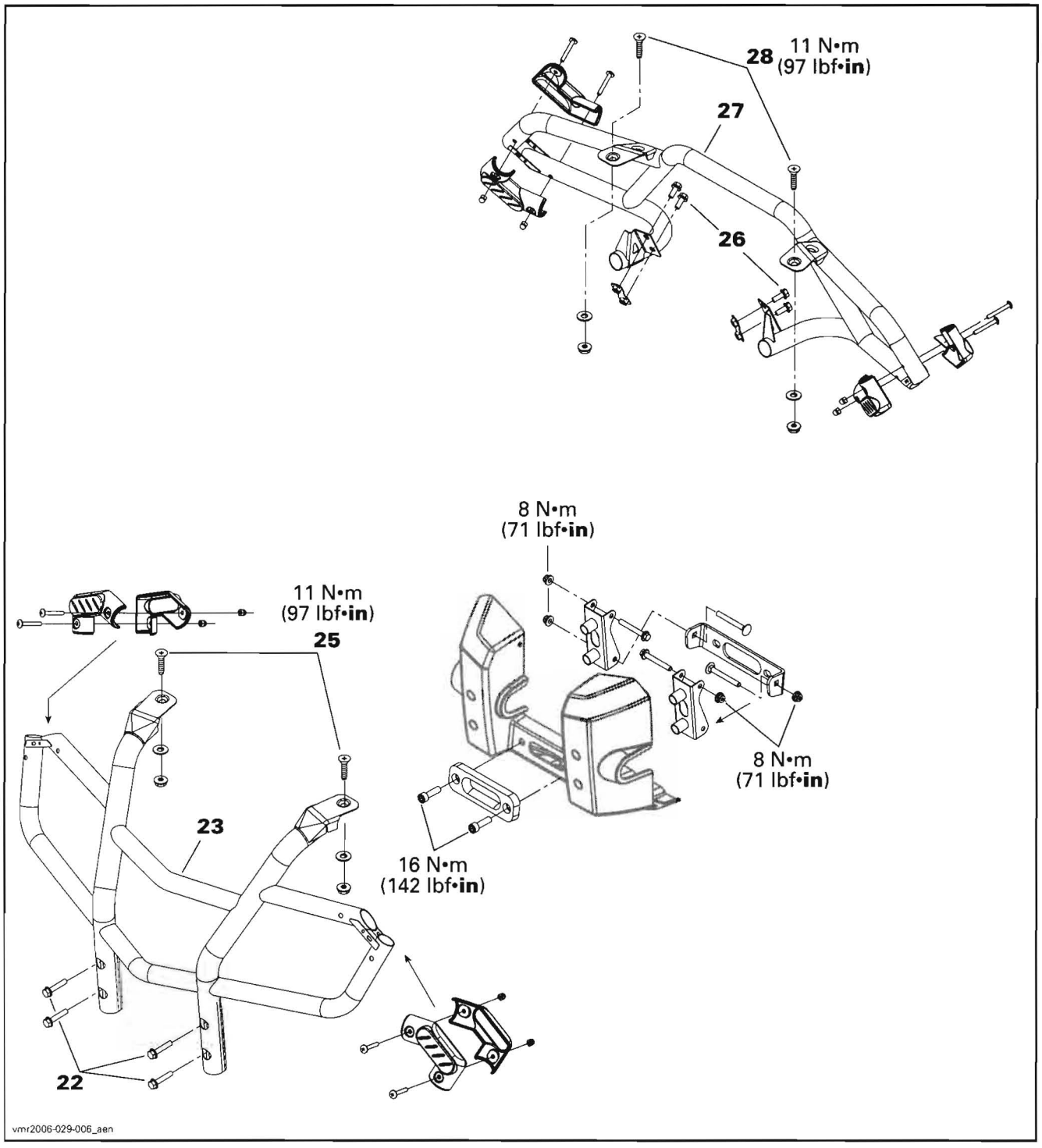

www.midwestmanuals.com
Sales@midwestmanuals.com

www.midwestmanuals.com

RENEGADE MODELS

Body Parts (Front View)

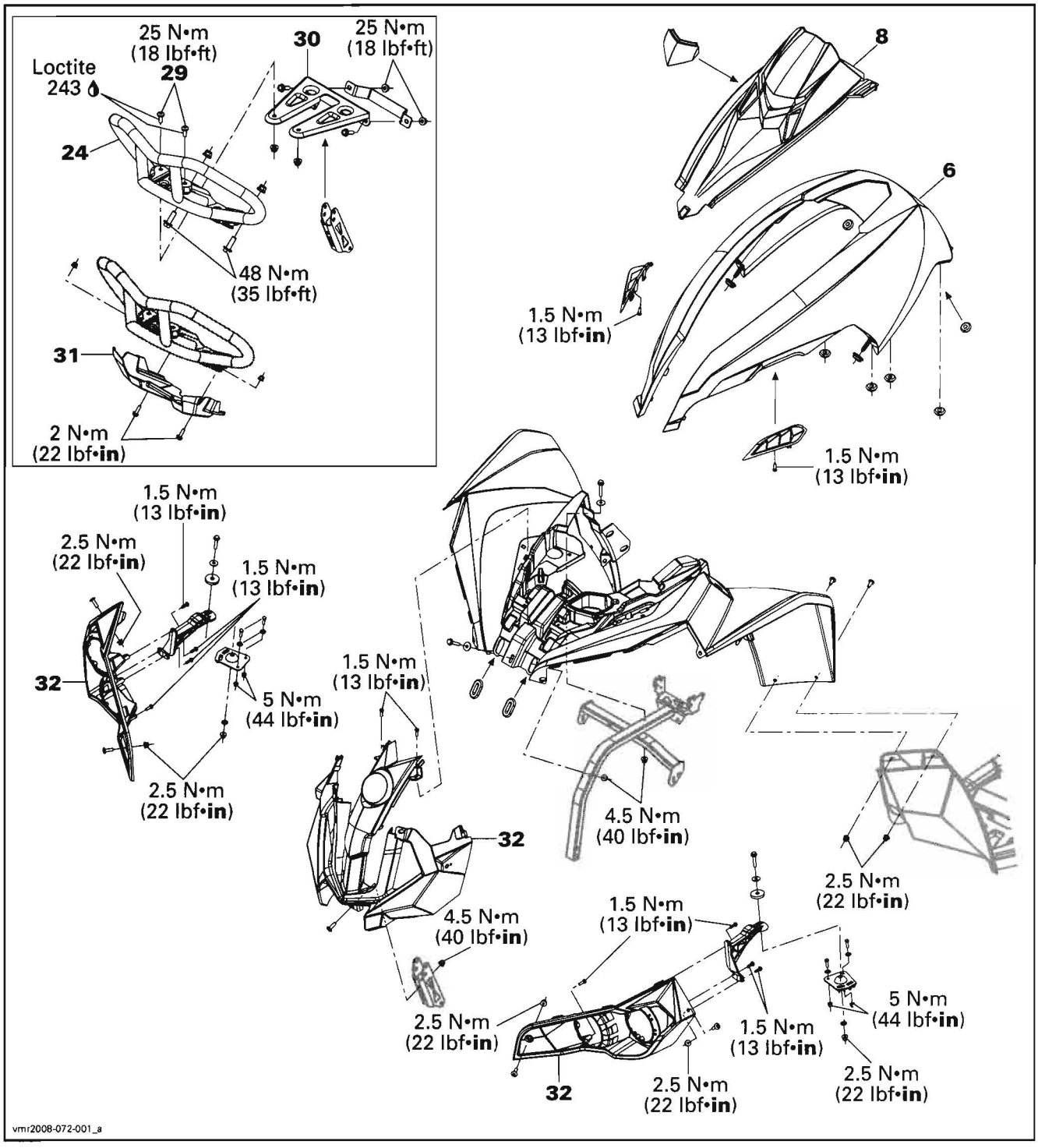

www.midwestmanuals.com
Sales@midwestmanuals.com

www.midwestmanuals.com

Body Parts (Rear View)

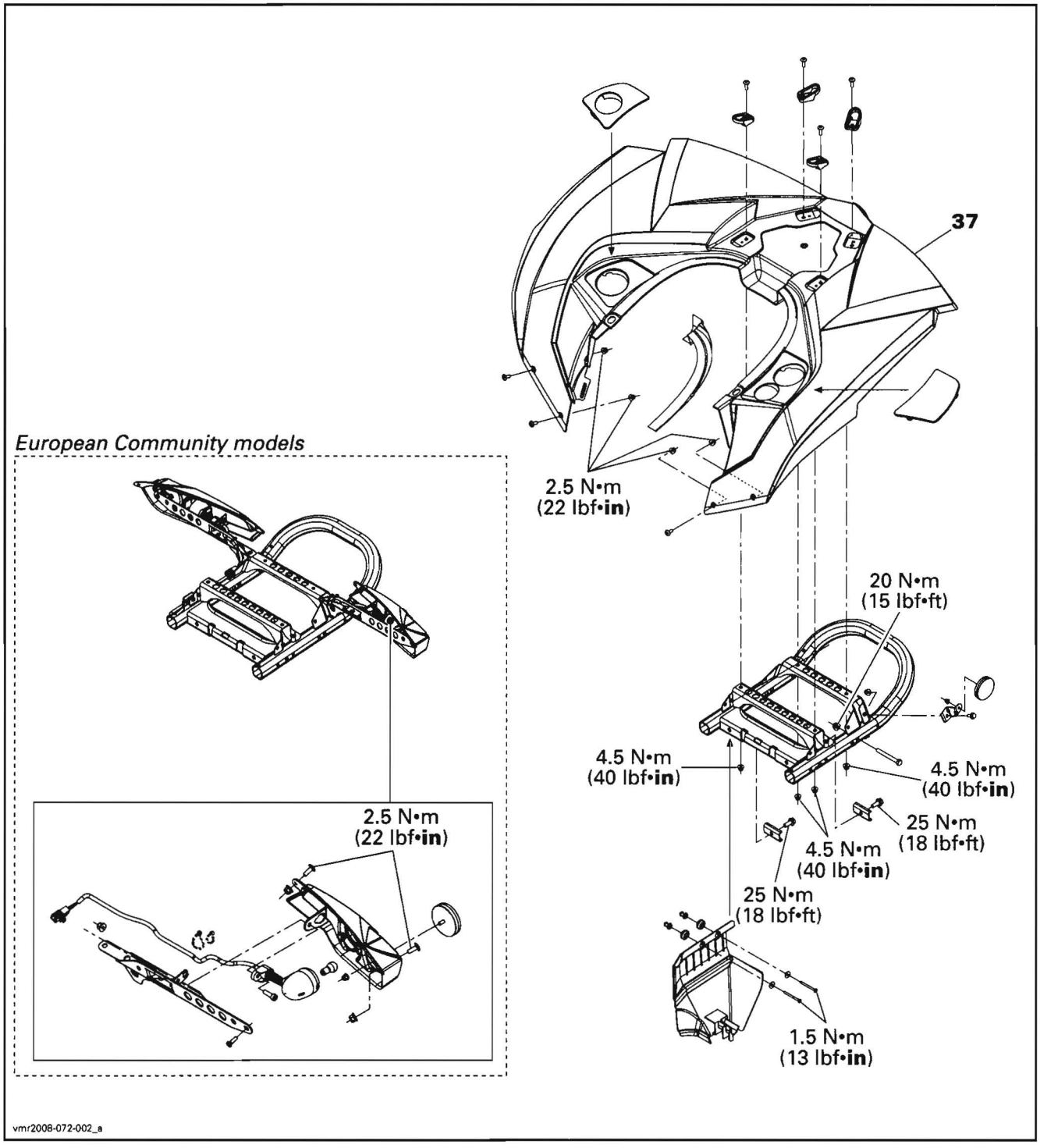

www.midwestmanuals.com
Sales@midwestmanuals.com

www.midwestmanuals.com

Body Parts (Side View)

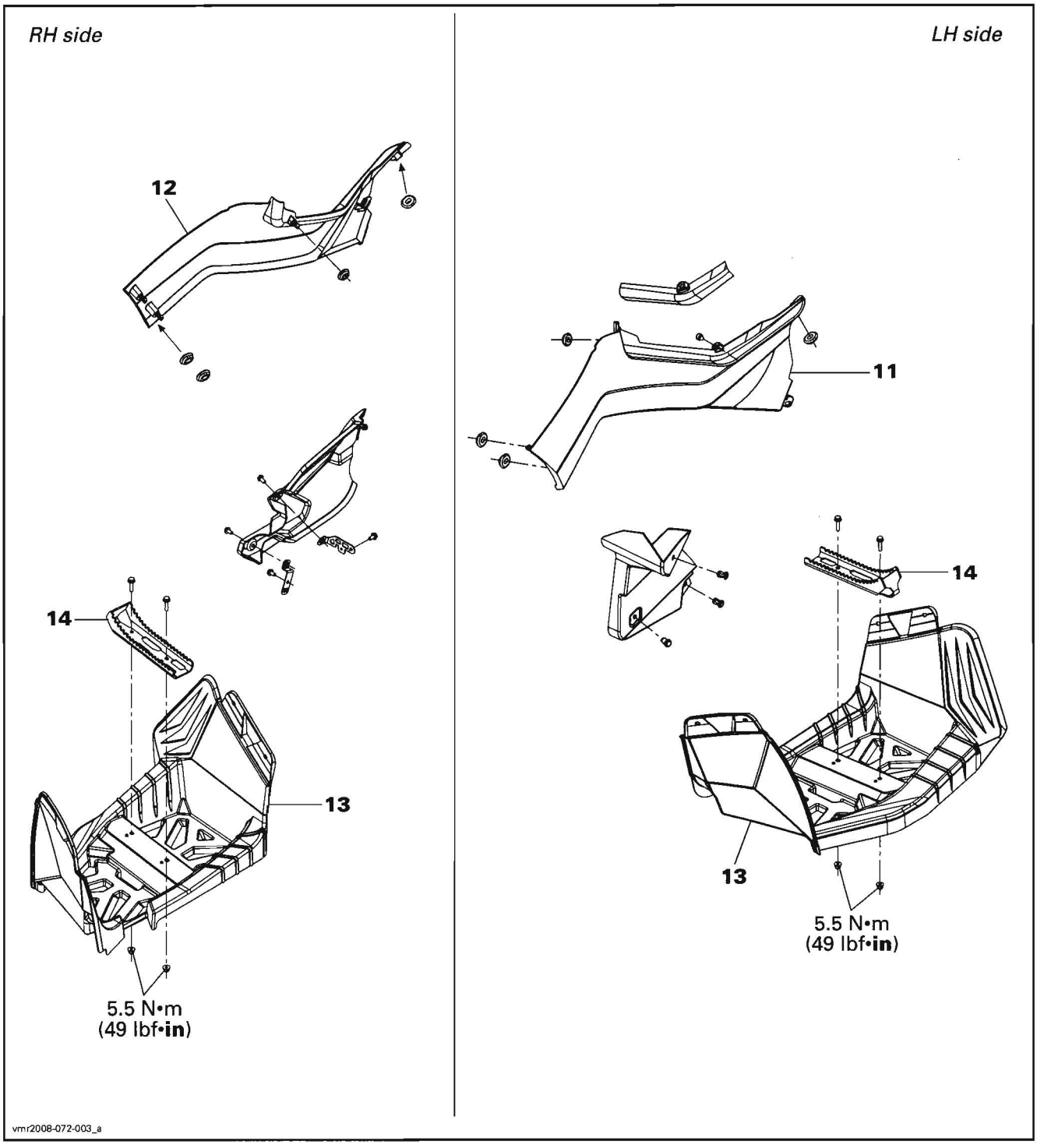

www.midwestmanuals.com
Sales@midwestmanuals.com

www.midwestmanuals.com

Seat

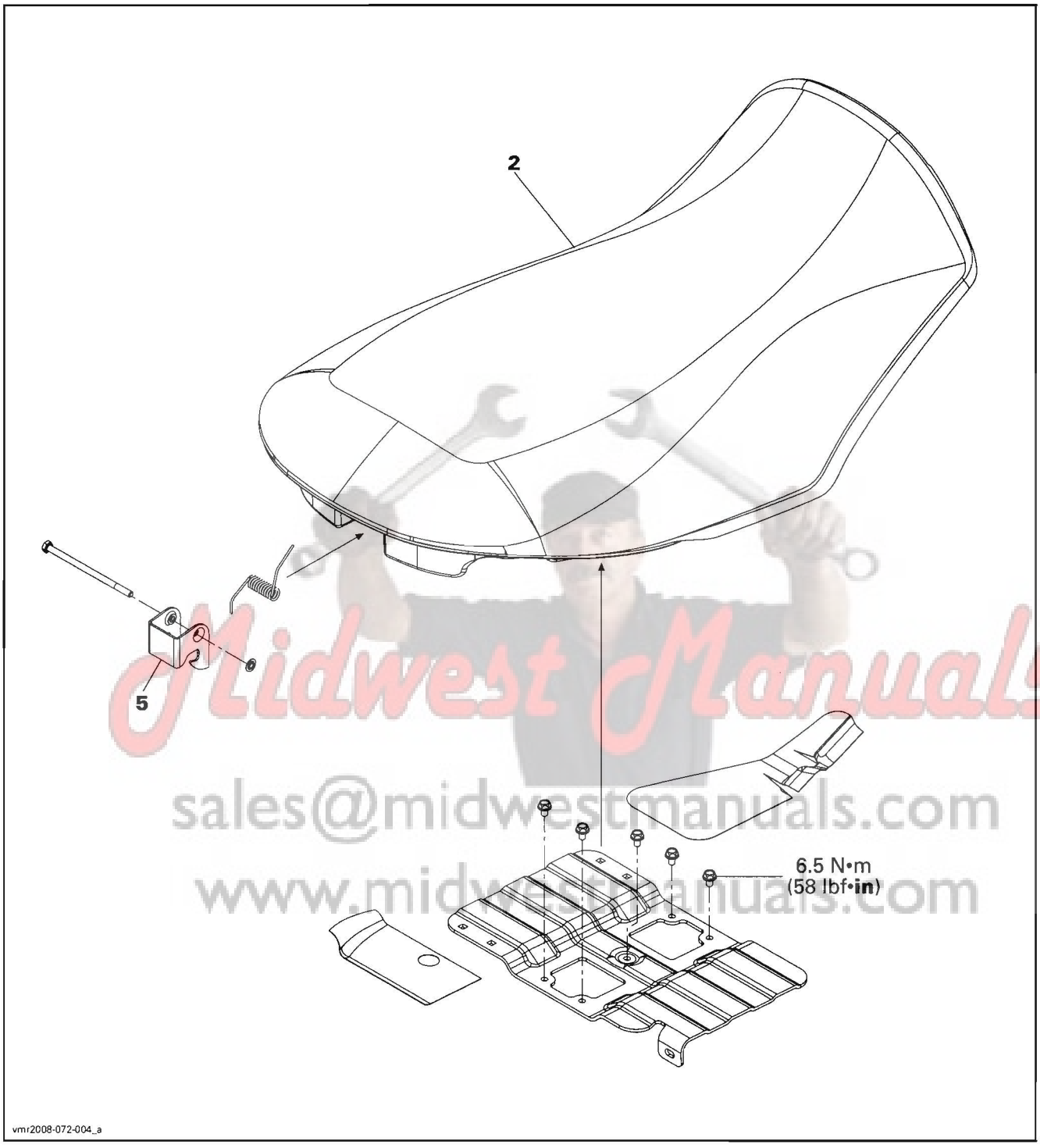

Midwest Manuals
sales@midwestmanuals.com
www.midwestmanuals.com

www.midwestmanuals.com
Sales@midwestmanuals.com

www.midwestmanuals.com

GENERAL

During assembly/installation, use the torque values and service products as in the exploded views.

Clean threads before applying a threadlocker. Refer to *SELF-LOCKING FASTENERS* and *LOCTITE APPLICATION* at the beginning of this manual for complete procedure.

⚠ WARNING

Torque wrench tightening specifications must strictly be adhered to.
Locking devices (e.g.: locking tabs, elastic stop nuts, cotter pins, etc.) must be replaced with new ones.

Vehicle Care

Clean the vehicle thoroughly, removing all dirt and grease accumulation.

To clean use a soft clean cloth and either soapy water or isopropyl alcohol.

To remove grease, oil or glue use isopropyl alcohol.

CAUTION: Do not apply isopropyl alcohol or acetone directly on decals.

The following products must not be used to clean or wax any of the plastic components used on the vehicles:

- gasoline
- brake fluid
- kerosene
- diesel fuel
- lighter fluid
- varsol
- naphtha
- acetone
- strong detergents
- abrasive cleaners
- waxes containing an abrasive or a cleaning agent in their formula.

Plastic Rivet

Plastic rivets **no. 1** are used in the riveting of the various body parts. Plastic rivets can be removed carefully with pliers Oetiker 1099 (P/N 295 000 070).

NOTE: Reuse the plastic rivets.

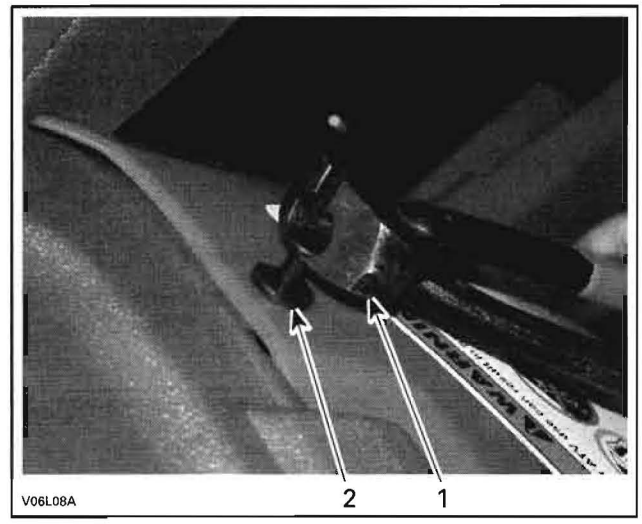

TYPICAL
1. *Pliers*
2. *Plastic rivet*

PROCEDURES

DECALS

Decal Removal

Using a heat gun warm up one end of decal for a few seconds until decal can roll off when rubbing with your finger.

Pull decal slowly and when necessary apply more heat to ease removal on the area that has to be peeled off.

If decal tears while pulling off, it has to be heated for a few seconds longer. If decal tends to stretch while pulling off, stop heating and wait a few seconds to let it cool, then peel it off.

Decal Installation

Using isopropyl alcohol, clean the surface and dry thoroughly.

Apply liquid soap to new decal and carefully position it. Using a sponge or a squeegee, remove the air bubbles and surplus water working from the center toward the edges. Allow to air dry.

CAUTION: Do not apply isopropyl alcohol or solvent directly on decals. Use these products in a well ventilated area.

SEAT

Seat Cleaning

It is recommended to clean seat(s) with a solution of warm soapy water, using a soft clean cloth.

www.midwestmanuals.com
Sales@midwestmanuals.com

www.midwestmanuals.com

CAUTION: Avoid use of harsh detergents such as strong soaps, degreasing solvents, abrasive cleaners, paint thinners, etc. that may cause damage to the seat cover.

Seat Removal

Passenger's Seat

Outlander MAX/MAX XT Models

Pull one of the passenger's seat latch levers **no. 4**. Those levers are located underneath the RH or LH rear end of seat.

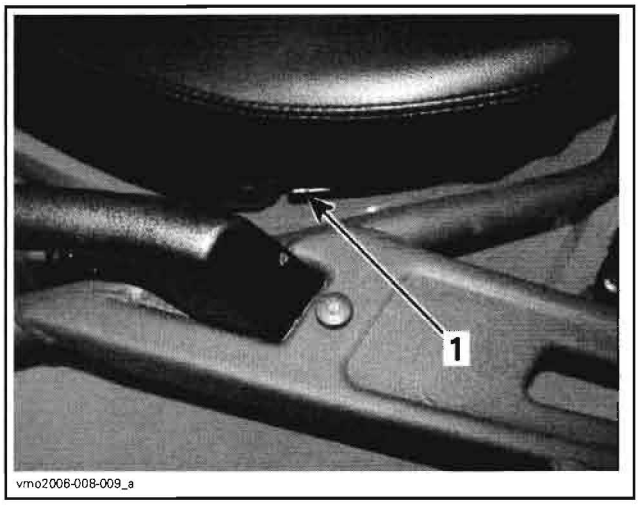

TYPICAL — LH SIDE
1. Seat latch lever

Gently lift the rear of seat **no. 3**.

Pull seat rearwards.

Continue lifting movement until you can release the front retaining device then completely remove passenger's seat.

Operator's Seat

Outlander MAX/MAX XT Models

Remove passenger's seat **no. 3** as mentioned above.

All Models

To remove seat **no. 2**, move latch lever **no. 5** upward while gently lifting rear of seat.

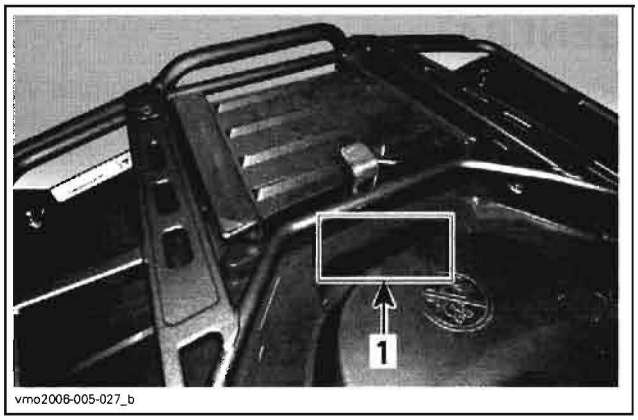

OUTLANDER/OUTLANDER XT
1. Seat latch

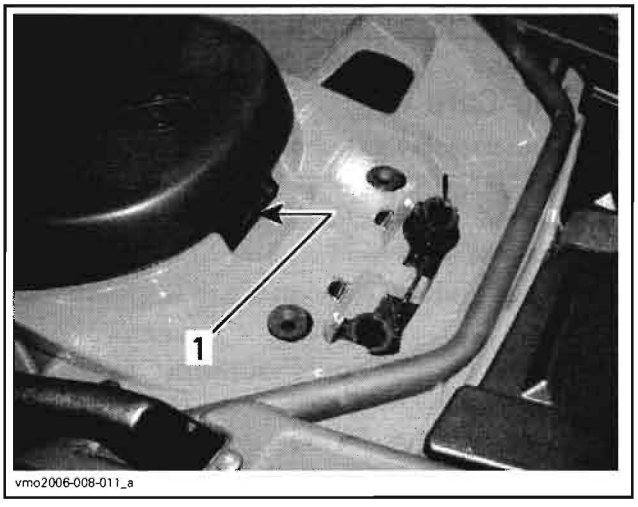

OUTLANDER MAX/OUTLANDER MAX XT
1. Seat latch

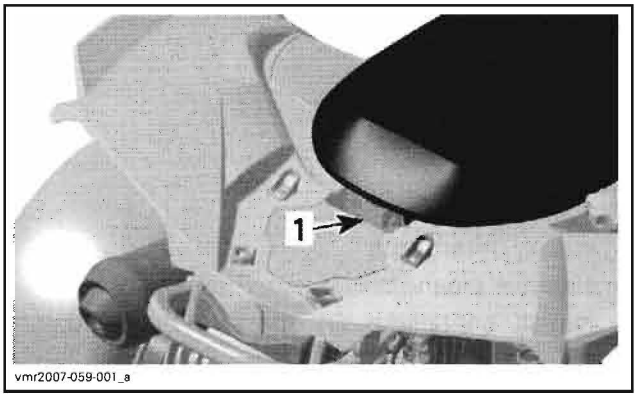

RENEGADE MODELS
1. Seat latch

Pull seat rearward. Continue lifting movement until you can release the front retaining device then completely remove seat.

www.midwestmanuals.com
Sales@midwestmanuals.com

www.midwestmanuals.com

Seat Installation

Insert front tabs of seat into frame hooks. When seat rests in its position, firmly push seat down to latch.

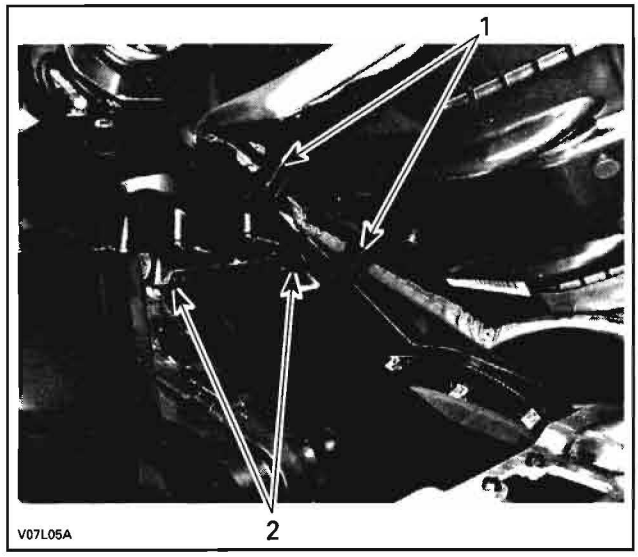

1. *Insert these tabs in hooks*
2. *Hooks*

NOTE: A distinctive snap will be felt. Double check that the seat is secure by giving it a tug to confirm proper latching.

⚠ WARNING

Make sure seat is securely latched before riding.

Seat Cover Replacement

Remove the old seat cover. Check the foam and replace if necessary.

Install staples with an electric tacker such as Arrow tacker no. ETN-50 or with a manual tacker such as Arrow tacker no. T-50.

NOTE: For an easier installation, it's highly recommended to use an electric tacker.

Ensure that the seat rest firmly against a hard surface such as a piece of wood. This is done to get the staples completely pushed in place.

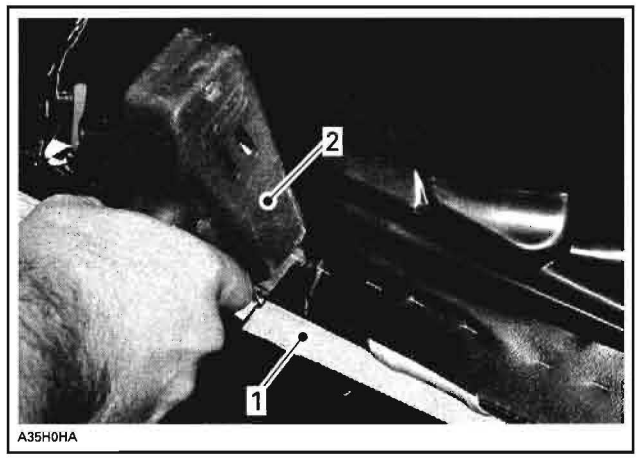

TYPICAL
1. *Piece of wood*
2. *ETN-50 (electric)*

After cover installation cut all around the excess of material.

CENTRAL PANEL

Central Panel Removal

Outlander Series

Remove seat(s).

Come off the plastic studs from the grommets.

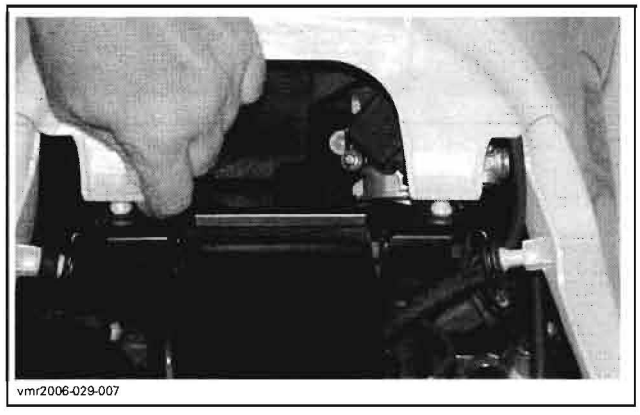

Pull central panel **no. 6** to separate its tabs from front fender **no. 7**.

www.midwestmanuals.com
Sales@midwestmanuals.com

www.midwestmanuals.com

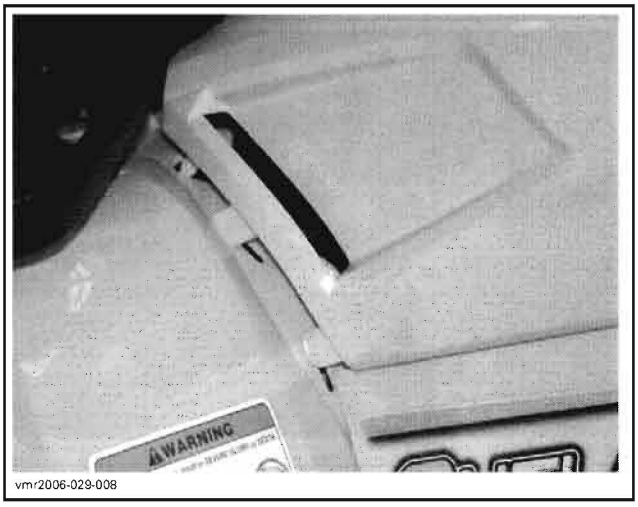

Renegade Models

Remove seat.

Lift the front part of the central panel **no. 6**.

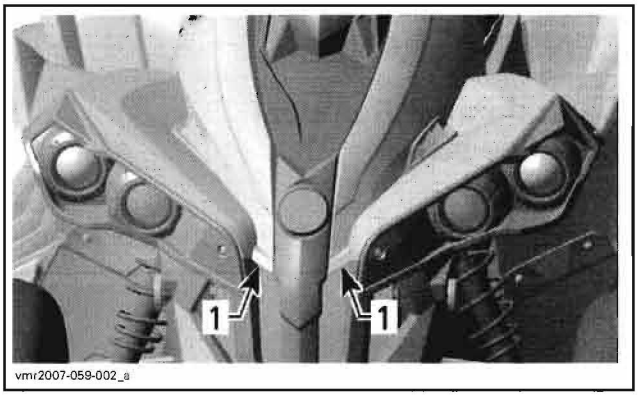

1. Lift here

Come off the plastic studs from the grommets.

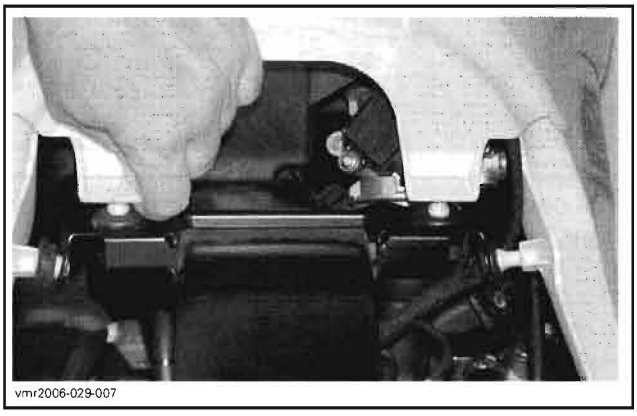

Remove central panel.

Central Panel Installation

The installation is the reverse of the removal procedure.

DASH BOARD

Dash Board Removal

Remove central panel.

Lift up dash board **no. 8**.

Disconnect speedometer, 12-volt power outlet and ignition switch (**Outlander Series**).

Dash Board Installation

For installation, reverse the removal procedure.

SIDE PANEL

Side Panel Removal

NOTE: Use the same procedure for the LH and RH side panels **no. 11** and **no. 12**.

Remove seat(s) and central panel **no. 6**.

Come off the plastic studs from the grommets.



Unhook the side panel from footrest.

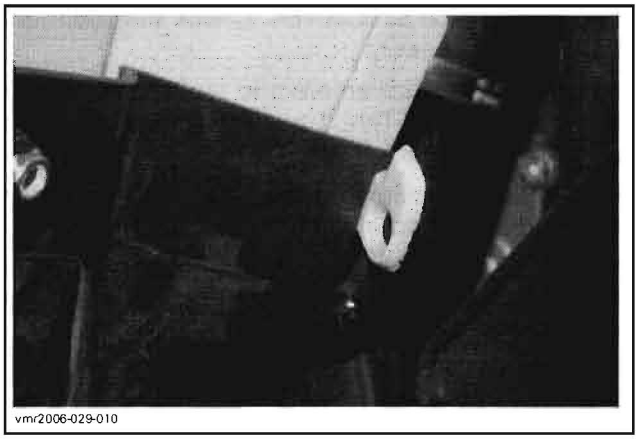

Remove side panel from vehicle.

Side Panel Installation

The installation is the reverse of removal procedure.

www.midwestmanuals.com
Sales@midwestmanuals.com

www.midwestmanuals.com

FOOTREST

Footrest Removal

Outlander Series

Remove footpeg(s) **no. 14** and all bolts that attach the footrest **no. 13** to fenders.

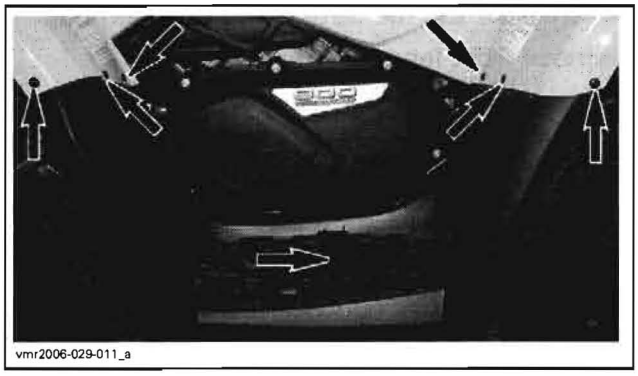

On **MAX** and **MAX XT models**, remove the footrest support retaining screws **no. 15**.

Renegade Models

Remove the footpeg and all bolts securing footrest to front and rear fender.

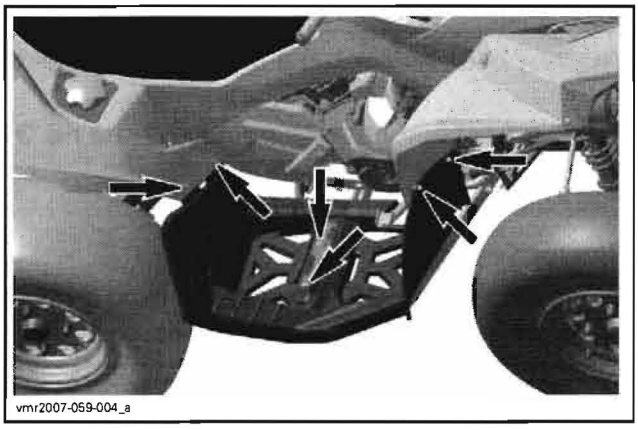

Footrest Installation

The installation is the reverse of removal procedure.

INNER FENDER

Inner Fender Removal

Outlander Series

Remove the plastic rivets that attach inner fenders **no. 20** and **no. 21** to footrest and frame.

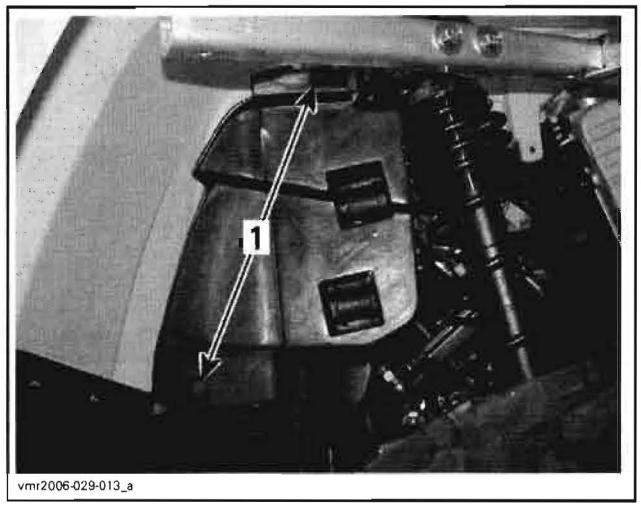

INNER FENDER ON RH SIDE
1. Plastic rivets

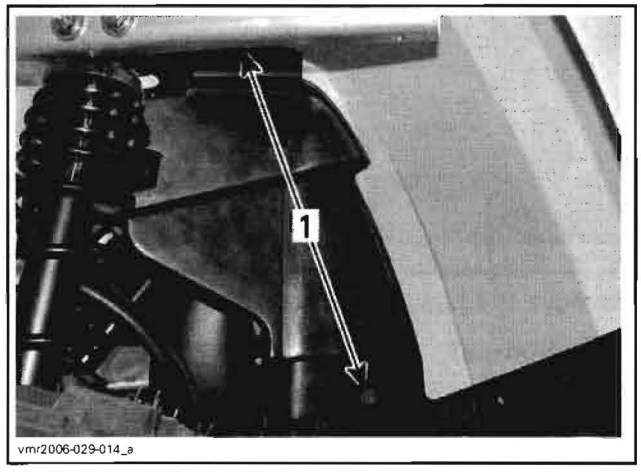

INNER FENDER ON LH SIDE
1. Plastic rivets

On the RH side, detach coolant hoses from inner fender **no. 21**.

Inner Fender Installation

The installation is the reverse of removal procedure.

HEAVY DUTY BUMPER

Outlander XT Package

Bumper Removal

Front Bumper

Remove bolts **no. 22** retaining the heavy duty bumper **no. 23** to the front bumper **no. 24**.

www.midwestmanuals.com
Sales@midwestmanuals.com

www.midwestmanuals.com

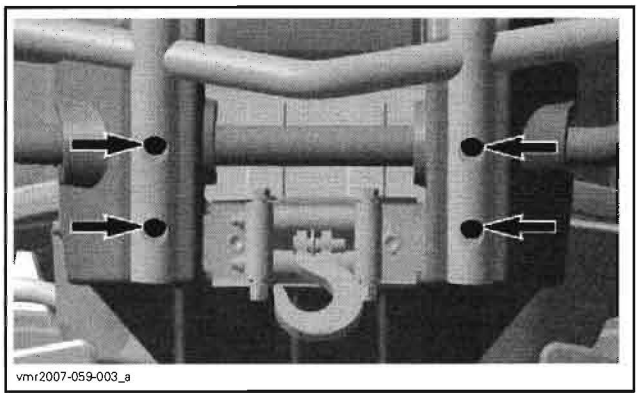
vmr2007-059-003_a

Remove screws **no. 25** that attach the heavy duty bumper to the rack.

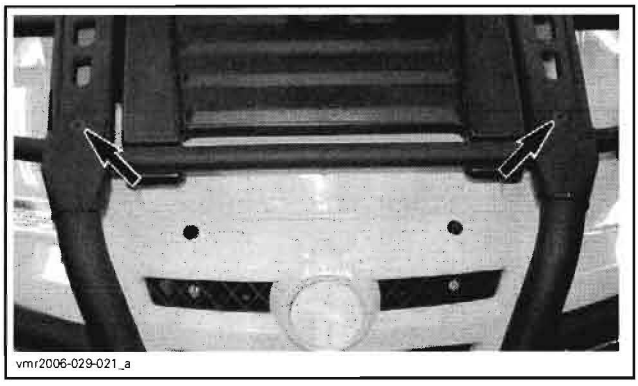
vmr2006-029-021_a

Remove the heavy duty bumper.

Rear Bumper

Unscrew bolts **no. 26** retaining the rear heavy duty bumper **no. 27** to the rear bumper.

Remove screws **no. 28** that attach the heavy duty bumper to the rack.

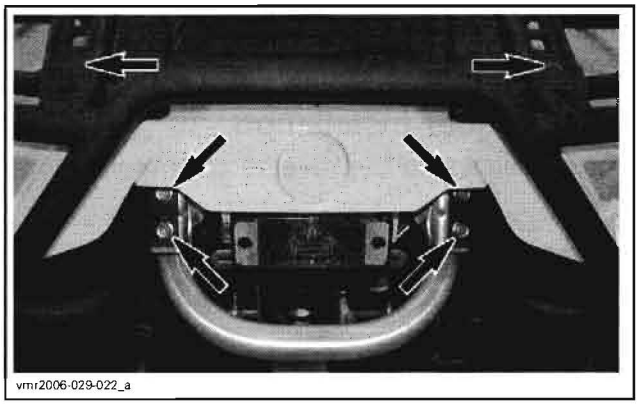
vmr2006-029-022_a

Bumper Installation

The installation is the reverse of the removal procedure.

FRONT BUMPER/FRONT SKID PLATE/FRONT FASCIA

Removal

Outlander Series

NOTE: On **XT models**, remove hook at the end of winch cable and the front heavy duty bumper.

Remove front fender.

Unplug headlamps connectors.

Unscrew bolts **no. 29** that attach front bumper **no. 24** to fender support **no. 30**.

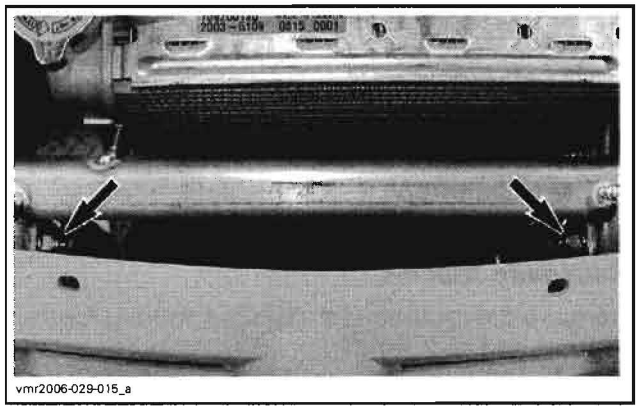
vmr2006-029-015_a

Unscrew bolts retaining the bottom of bumper to frame.

Remove front bumper with front skid plate **no. 31** and front fascia **no. 32** assembly.

Disassemble all parts if necessary.

Renegade Models

Unscrew bolts **no. 29** securing the front bumper **no. 24** to the bumper bracket **no. 30**.

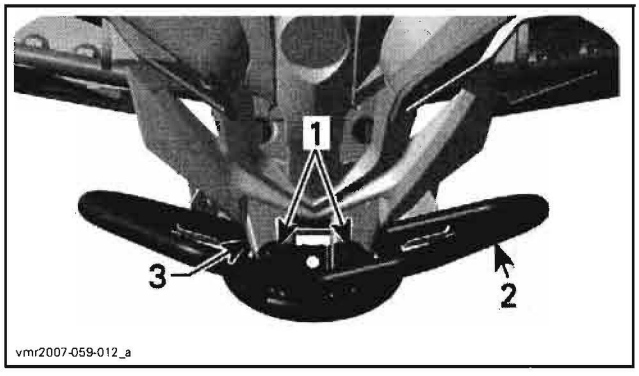

vmr2007-059-012_a

1. *Upper bumper bolts*
2. *Front bumper*
3. *Bumper bracket*

Unscrew bolts retaining the bottom of front bumper to frame.

www.midwestmanuals.com
Sales@midwestmanuals.com

www.midwestmanuals.com

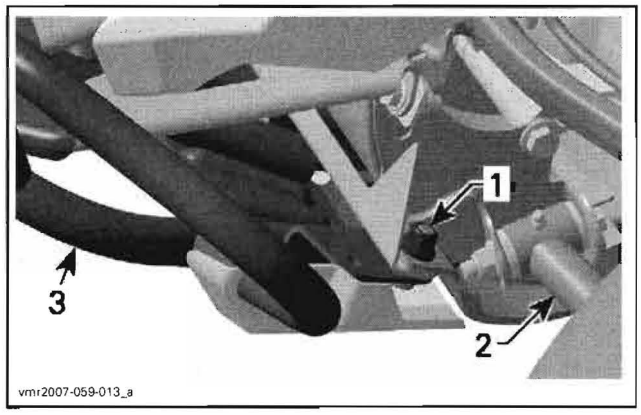

1. *Lower bumper bolt*
2. *LH lower suspension arm*
3. *Front bumper*

Remove front bumper.

Installation

The installation is the reverse of removal procedure.

Outlander Series

Install a washer **no. 33** under each plastic rivet located at the both ends of fascia.

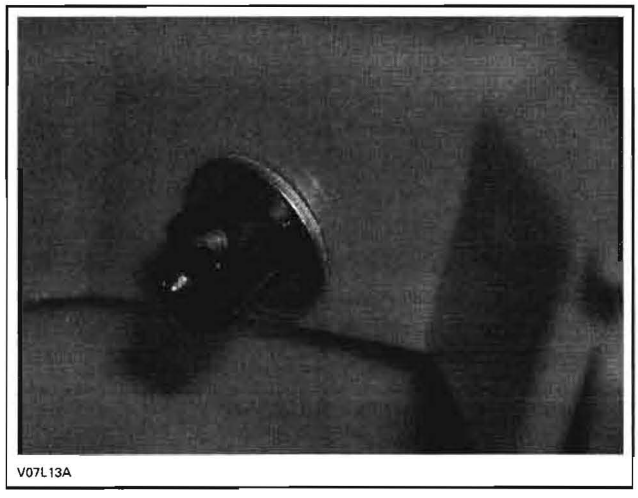

LUGGAGE RACK

Outlander Series

NOTE: Use the same procedure for front or rear luggage racks.

Rack Removal

NOTE: On **XT models**, heavy duty bumpers (front and rear) must be removed to allow luggage racks removal.

Remove storage or service compartment cover.

Unscrew the four (4) bolts **no. 34** retaining the rack **no. 35**.

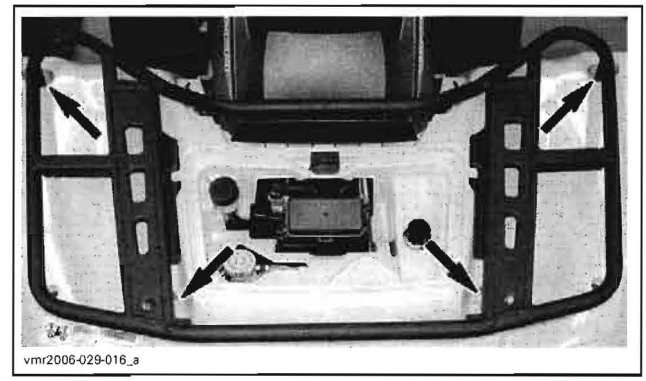

Remove luggage rack.

Rack Installation

The installation is the reverse of removal procedure.

FENDER

Fender Removal

Front Fender

Outlander Series

Remove both side panels **no. 11** and **no. 12**.

Remove bolts that attach both footrests to the fender.

Remove plastic rivets retaining front fender **no. 7** to front fascia.

Remove luggage rack.

Unscrew and remove fender bolts **no. 36**.

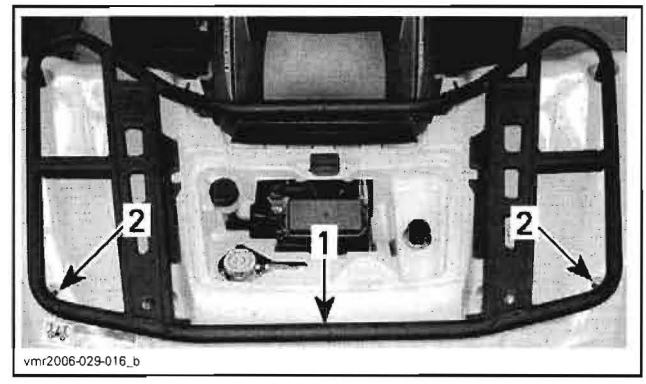

1. *Luggage rack*
2. *Fender bolts*

Unscrew the brake fluid reservoir bolt.

www.midwestmanuals.com
Sales@midwestmanuals.com

www.midwestmanuals.com

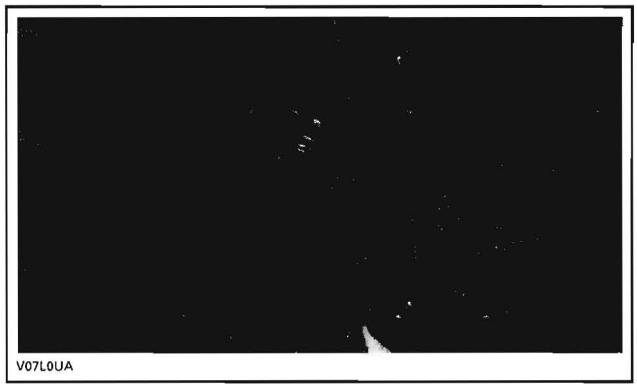
V07L0UA

Remove the coolant reservoir support bolt.

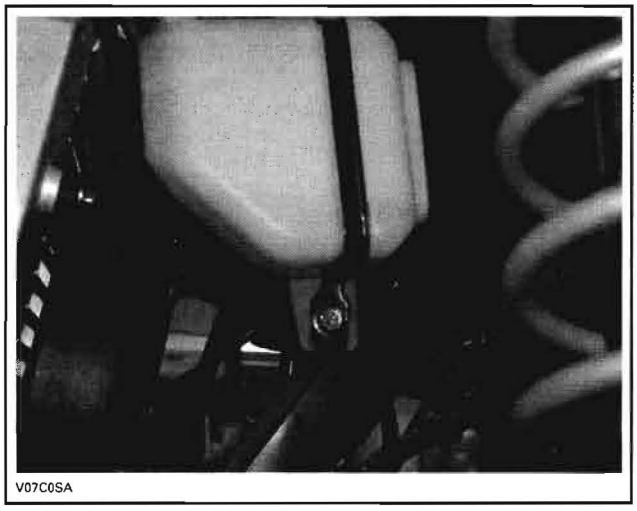
V07C0SA

Remove both inner fenders.

Detach dash board no. 8 from fender.

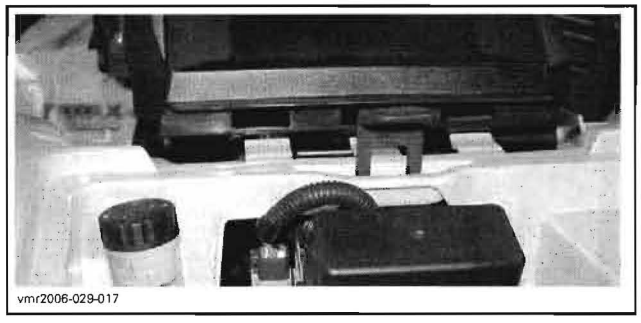
vmr2006-029-017

Remove push nuts retaining fender to frame.

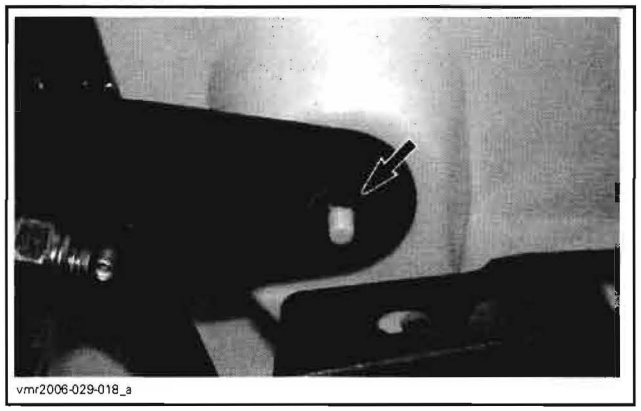
vmr2006-029-018_a

Lift up fender and place it in a safe place to avoid scratches.

Renegade Models

Remove central panel, dash board and both side panels.

Remove the screw at the bottom of the front plastic grid.

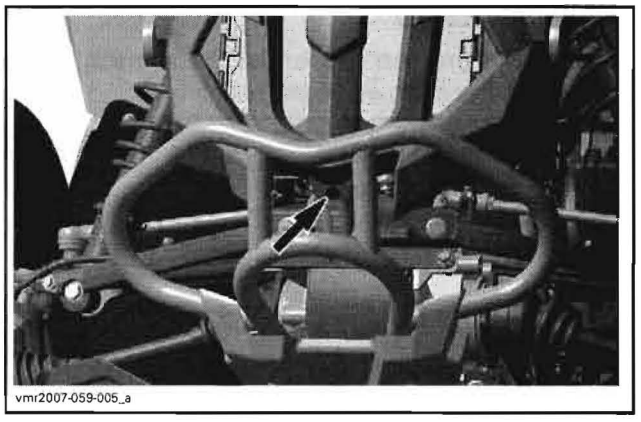
vmr2007-059-005_a

Remove the screw located between radiator cap and coolant tank.

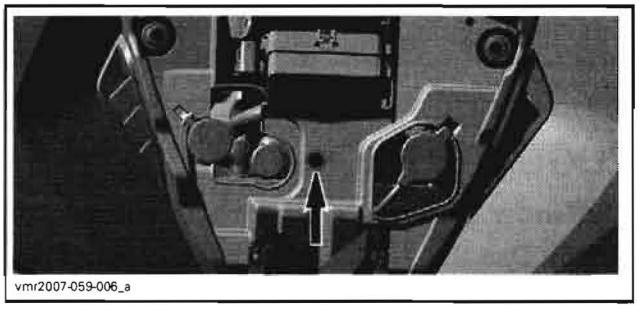
vmr2007-059-006_a

Remove screws attaching front fender to both footrests.

www.midwestmanuals.com
Sales@midwestmanuals.com

www.midwestmanuals.com

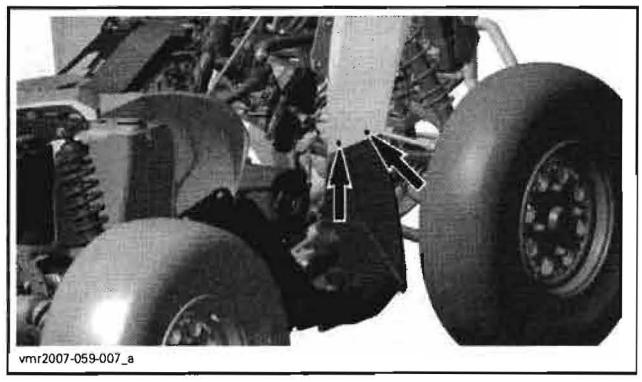

Unplug all headlamps.

Remove fender and store it safely to avoid scratches.

Rear Fender

Outlander Series

Remove seat(s).

Remove both side panels.

Remove luggage rack **no. 35**.

Remove all screws retaining the footrests to rear fender **no. 37**.

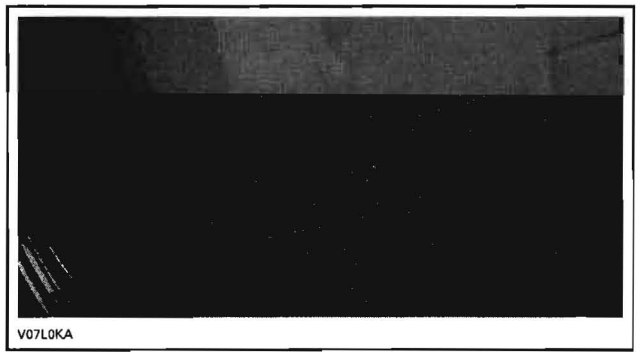

Unscrew the fuel tank cap.

Lift and remove fender. Place it in a place to avoid scratches.

Reinstall the fuel tank cap.

Renegade Models

Remove seat and both side panels.

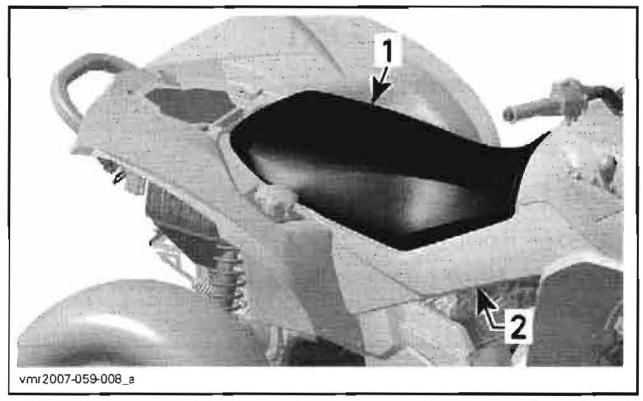

1. Seat
2. RH side panel

Remove screws attaching the bottom of rear fender **no. 37** to both footrests.

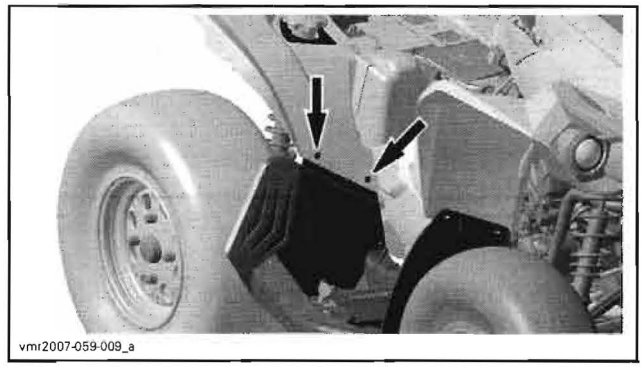

Remove anchorage hooks on the top of rear fender.

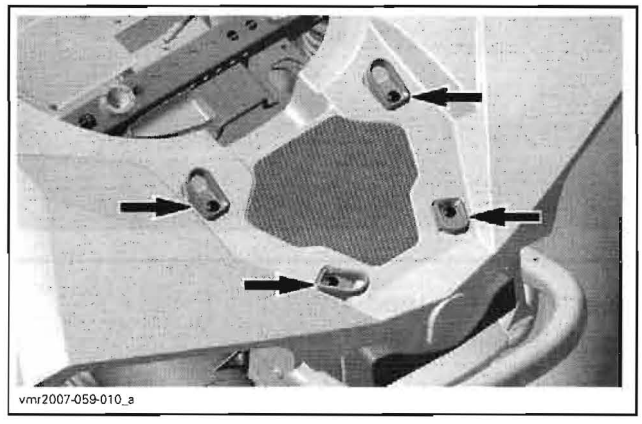

Remove fuel tank cap.

Lift and remove fender. Store it safely to avoid scratches.

Reinstall the fuel tank cap.

Fender Installation

The installation is the reverse of removal procedure.

www.midwestmanuals.com
Sales@midwestmanuals.com

www.midwestmanuals.com

FENDER SUPPORT

Outlander Series

Fender Support Removal

Front Fender Support

Remove front fender.

Unscrew front bumper bolts **no. 29** and radiator mounting bolts.

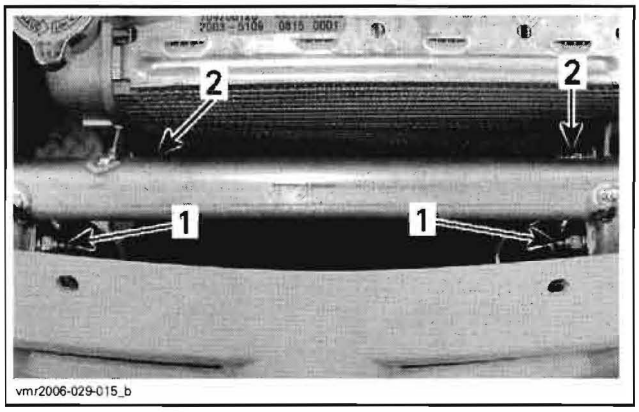

1. *Radiator bolts*
2. *Bumper bolts*

Remove bolts **no. 39** retaining the fender support **no. 30** to the frame.

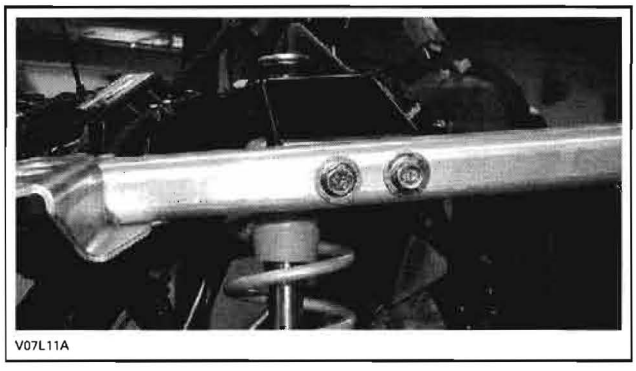

Rear Fender Support

Remove rear fender.

Remove bolts that attach fender support **no. 40** to frame.

Unscrew the exhaust support bolt.

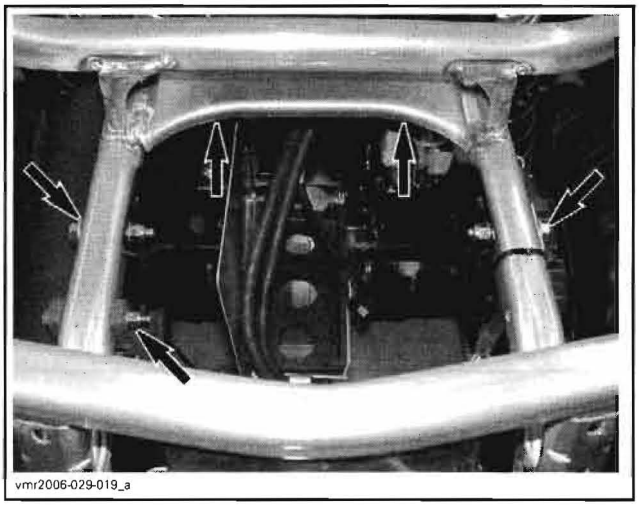

Fender Support Installation

The installation is the reverse of removal procedure.

www.midwestmanuals.com
Sales@midwestmanuals.com

www.midwestmanuals.com

FRAME

Outlander 500/650/800 Series and Renegade Models

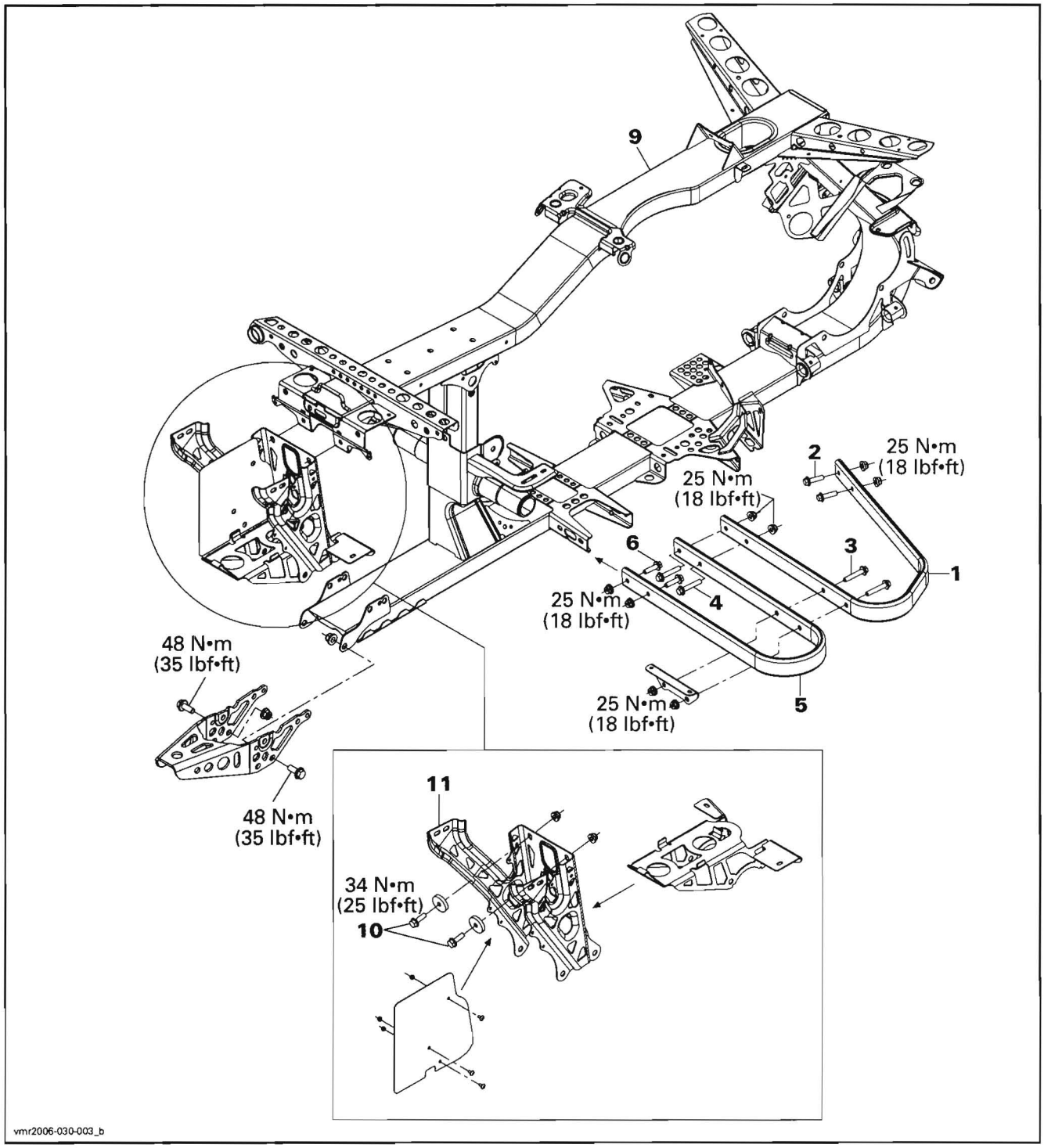

www.midwestmanuals.com
Sales@midwestmanuals.com

www.midwestmanuals.com

Outlander MAX 500/650/800 Series

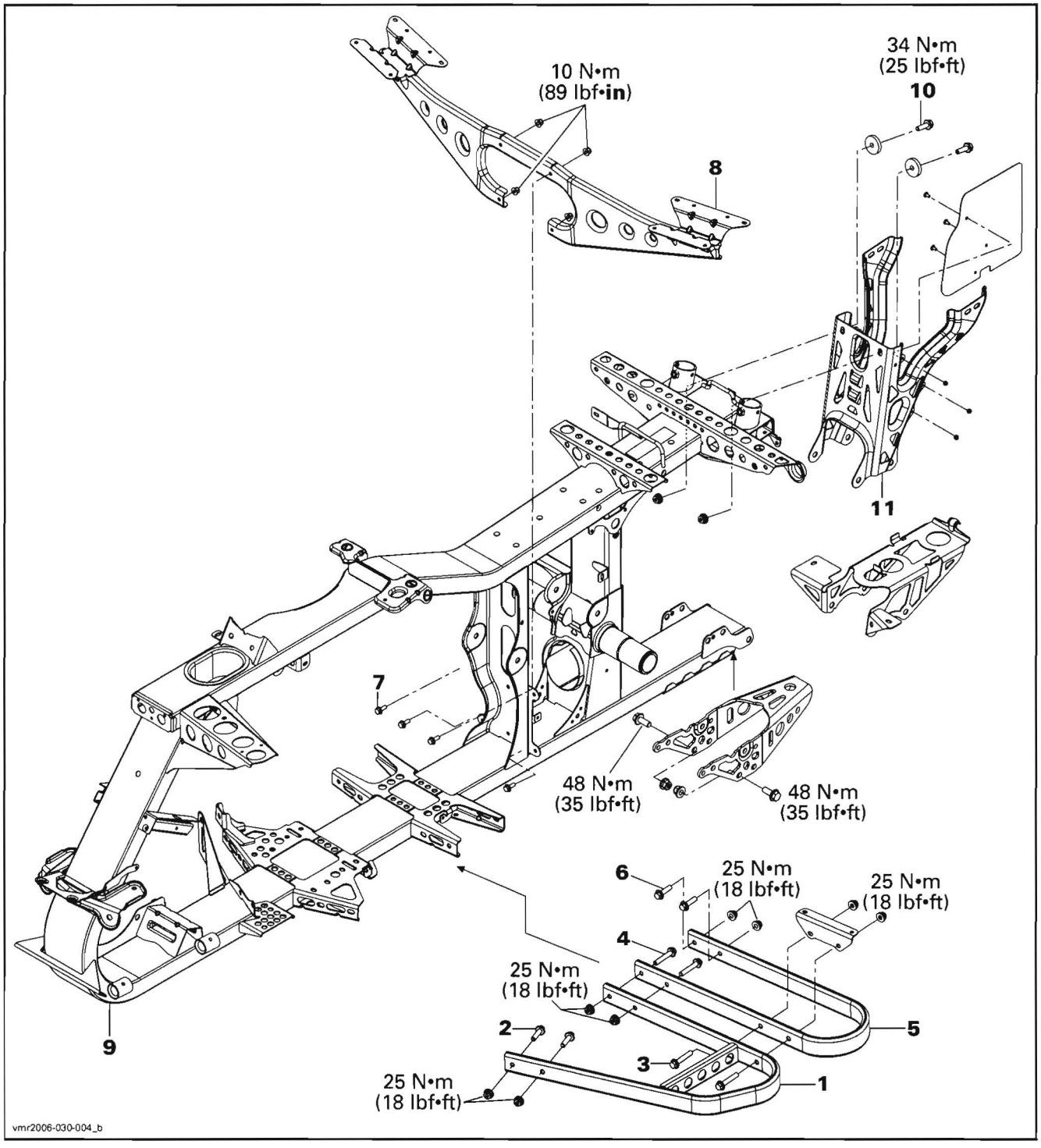

www.midwestmanuals.com
Sales@midwestmanuals.com

www.midwestmanuals.com

GENERAL

During assembly/installation, use the torque values and service products as in the exploded views.

Clean threads before applying a threadlocker. Refer to *SELF-LOCKING FASTENERS* and *LOCTITE APPLICATION* at the beginning of this manual for complete procedure.

⚠ WARNING

Torque wrench tightening specifications must strictly be adhered to.
Locking devices (e.g.: locking tabs, elastic stop nuts, cotter pins, etc.) must be replaced with new ones.

PROCEDURES

FOOTREST SUPPORT

NOTE: Use the same procedure for RH or LH footrest supports.

Footrest Support Removal

Front Footrest Support

To remove the front support **no. 1**, do the following.

Remove the appropriate footrest.

Unscrew bolts **no. 2**, **no. 3** and **no. 4**.

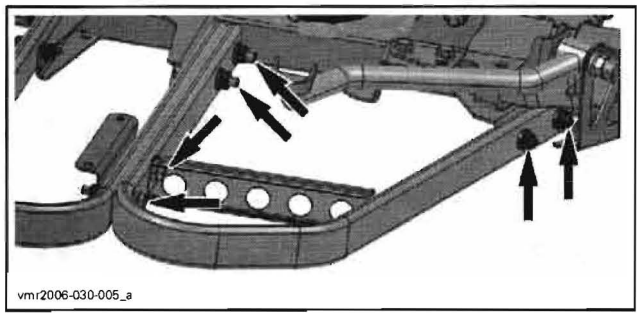

Remove the front footrest support.

Rear Footrest Support

To remove the rear footrest support **no. 5**, use same procedure than front footrest support but remove bolts **no. 6** instead of bolts **no. 2**.

Passenger Footrest Support

All MAX/MAX XT Models

Remove both footrests.

Unscrew bolts **no. 7** then remove passenger footrest support(s) **no. 8**.

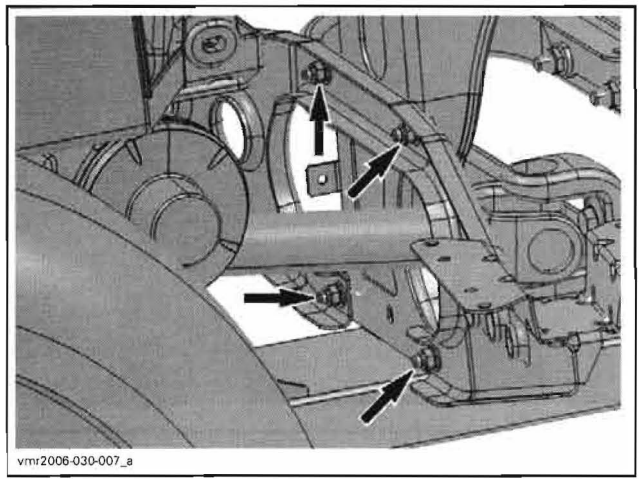

OUTLANDER MAX

Footrest Support Inspection

Check footrest support(s) for cracks, bending or other damages. Replace if necessary.

Footrest Support Installation

The installation is the reverse of removal procedure.

NOTE: Install all bolts before tightening.

BATTERY SUPPORT

Battery Support Removal

Remove battery (refer to *STARTING SYSTEM*).

Remove bolts **no. 10** retaining the battery support **no. 11** to frame **no. 9**.

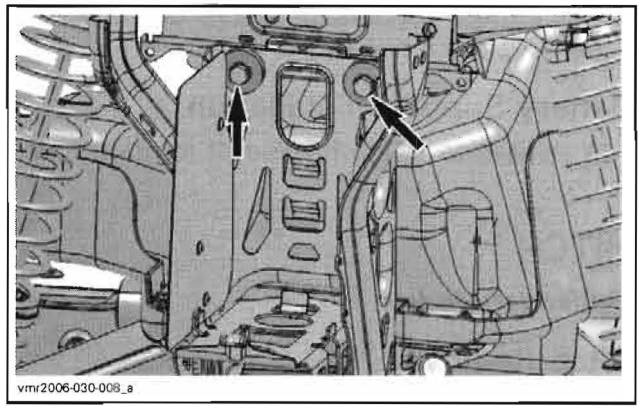

TYPICAL

Remove upper differential bolts.

www.midwestmanuals.com
Sales@midwestmanuals.com

www.midwestmanuals.com

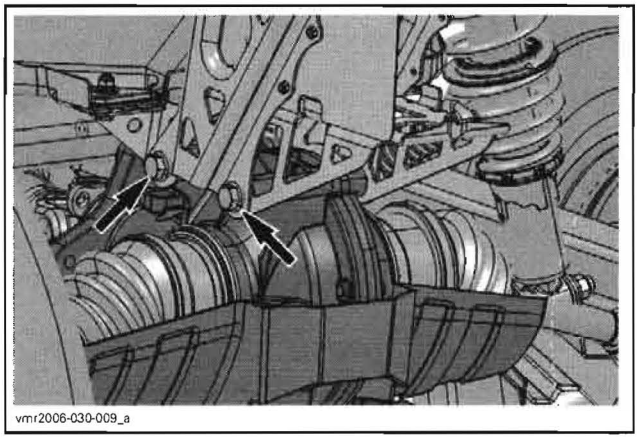

TYPICAL

Remove bolts that attach fuel tank and its protector to frame.

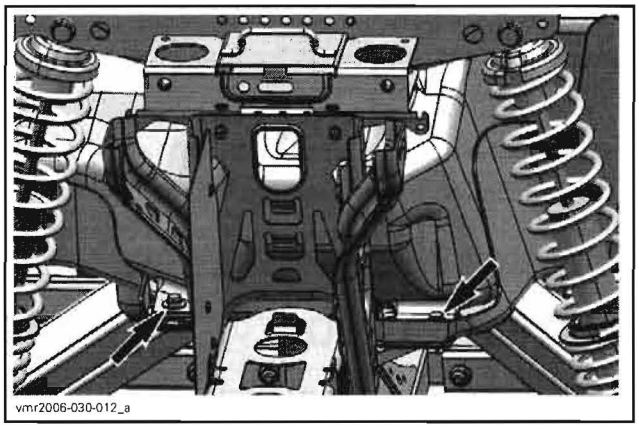

Remove battery support from vehicle.

Battery Support Inspection

Check battery support for cracks or other damages. Replace if necessary.

Battery Support Installation

The installation is the reverse of removal procedure.

HITCH

Outlander Models

Hitch Removal

Remove the differential protector.

Unscrew bolts retaining the hitch to frame.

Remove lower differential bolts.

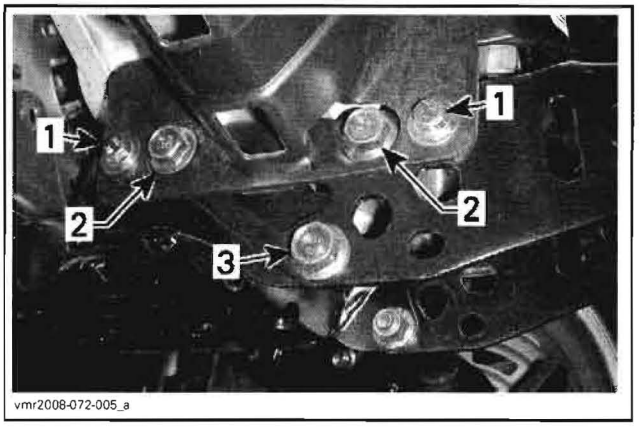

1. *Differential protector bolts*
2. *Lower differential bolts*
3. *Hitch bolt*

Remove hitch from vehicle.

Hitch Inspection

Check hitch for cracks, bending or other damages. Replace if necessary.

Hitch Installation

The installation is the reverse of removal procedure.

RECOVERY HOOK

Renegade Models

Hook Removal

Remove the differential protector.

Unscrew bolts retaining the recovery hook to frame.

Remove lower differential bolts.

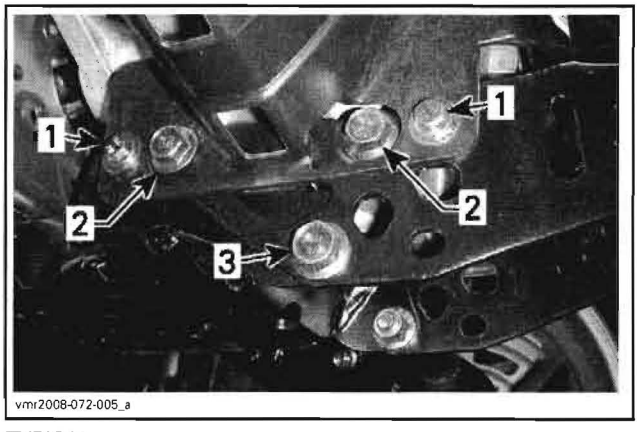

TYPICAL
1. *Differential protector bolts*
2. *Lower differential bolts*
3. *Hitch bolt*

Remove recovery hook from vehicle.

www.midwestmanuals.com
Sales@midwestmanuals.com

www.midwestmanuals.com

Hook Inspection

Check hitch for cracks, bending or other damages. Replace if necessary.

Hook Installation

The installation is the reverse of removal procedure.

FRAME

Frame Cleaning

Clean frame **no. 9** with appropriate cleaners and rinse with high pressure hose.

NOTE: Clean the draining holes under frame. The drain holes are located at the rear of bottom side of frame.

Touch up all metal spots where paint has been scratched off. Spray all bare metal parts of vehicle with metal protector.

Frame Welding

CAUTION: Before performing electrical welding anywhere on the vehicle, unplug the multiple connector at the electronic module connector. Also unplug the negative cable and the voltage regulator. This will protect the electronic module and battery against damage caused by flowing current when welding.

Use the following specifications for electric welding:

- amperage: 70 - 110 A
- voltage: 20 - 24 V
- rod: E-7014 (3/32 in).

NOTE: Install the ground as close as possible from the reparation area.

CAUTION: If welding is to be done near plastic material, it is recommended to either remove the part from the area or to protect it with aluminum foil to prevent damage.

www.midwestmanuals.com
Sales@midwestmanuals.com

www.midwestmanuals.com

www.midwestmanuals.com
Sales@midwestmanuals.com

www.midwestmanuals.com

OUTLANDER SERIES

MODEL			OUTLANDER™ 500	OUTLANDER™ 650	OUTLANDER™ 800
ENGINE					
Engine type			ROTAX® V490	ROTAX® V660	ROTAX® V810
			4-stroke, Single Over Head Camshaft (SOHC), liquid cooled		
Number of cylinders			2		
Number of valves			8 valves (mechanical adjustment)		
Bore mm (in)			82.03 (3.23)		91 (3.58)
Stroke mm (in)			47.3 (1.86)	61.5 (2.42)	
Displacement cm^3 (in^3)			500 (30.51)	650 (39.67)	800 (48.82)
Compression ratio			10.7:1	10.3:1	10.3:1
Decompressor type			N.A.		
Maximum HP RPM RPM			7250		6750
Lubrication	Type		Wet sump. Replaceable oil filter		
	Oil filter		BRP Rotax paper type, replaceable		
	Engine oil pressure	Minimum	350 kPa (51 PSI) at 6000 RPM		
	Engine oil	Capacity (oil change with filter)	2 L (2.11 quarts)		
		Recommended	SAE 5W30 API classification SM, SL or SJ see *OIL VISCOSITY CHART* in *LUBRICATION SYSTEM*		
Intake valve opening			3° BTDC	5° BTDC	
Intake valve closing			34° ABDC	45° ABDC	
Exhaust valve opening			39° BBDC	50° BBDC	
Exhaust valve closing			2° ATDC	0° ATDC	
Chain tensioner plunger protrusion		Service limit mm (in)	20.0 (.7874)		
Valve clearance	Intake mm (in)		0.06 to 0.14 (.0024 to .0055)		
	Exhaust mm (in)		0.11 to 0.19 (.0043 to .0075)		
Valve stem diameter	Intake	New mm (in)	4.966 to 4.980 (.1955 to .1960)		
		Service limit mm (in)	4.930 (.1941)		
	Exhaust	New mm (in)	4.956 to 4.970 (.1951 to .1957)		
		Service limit mm (in)	4.930 (.1941)		
Valve out of round	Intake and exhaust	New mm (in)	0.005 (.0002)		
		Service limit mm (in)	0.06 (.0024)		
Valve guide diameter		New mm (in)	4.998 to 5.018 (.1968 to .1976)		
		Service limit mm (in)	5.050 (.1988)		
Valve spring free length		New mm (in)	40.81 (1.607)		
		Service limit mm (in)	39.00 (1.535)		
Valve seat contact width	Intake	New mm (in)	1.05 to 1.35 (.041 to .053)		
		Service limit mm (in)	1.8 (.070)		
	Exhaust	New mm (in)	1.25 to 1.55 (.049 to .061)		
		Service limit mm (in)	2 (.078)		

www.midwestmanuals.com
Sales@midwestmanuals.com

www.midwestmanuals.com

MODEL				OUTLANDER™ 500	OUTLANDER™ 650	OUTLANDER™ 800
ENGINE (cont'd)						
Rocker arm bore diameter		New	mm (in)	12.036 to 12.050 (.4739 to .4744)		
		Service limit	mm (in)	12.060 (.4748)		
Rocker arm shaft diameter		New	mm (in)	12.000 to 12.018 (.4724 to .4731)		
		Service limit	mm (in)	11.990 (.4720)		
Piston measurement		New	mm (in)	81.950 to 81.966 (3.2264 to 3.2270)		90.950 to 90.966 (3.5807 to 3.5813)
		Service limit	mm (in)	81.850 (3.2224)		90.850 (3.577)
Piston/cylinder clearance		New	mm (in)	0.057 (.0022)		0.027 (.0011)
		Service limit	mm (in)	0.130 (.0051)		0.100 (.0040)
Piston ring type		1st		Upper compression ring, rectangular		
		2nd		Lower compression ring, tapered face		
		3rd		Oil scraper ring		
Ring end gap	Rectangular	New	mm (in)	0.20 to 0.40 (.008 to .016)		
	Tapered face			0.20 to 0.40 (.008 to .016)		
	Oil scraper ring			0.20 to 0.70 (.008 to .028)		
	All	Service limit	mm (in)	1.5 (.059)		
Ring/piston groove clearance	Rectangular	New	mm (in)	0.03 to 0.070 (.0012 to .0028)		
	Tapered face			0.02 to 0.060 (.0008 to .0024)		
	Oil scraper ring			0.01 to 0.018 (.0004 to .0007)		
	Rectangular	Service limit	mm (in)	0.15 (.0059)		
	Tapered face			0.15 (.0059)		
	Oil scraper ring			0.25 (.0098)		
Cylinder bore		New	mm (in)	82.023 to 82.037 (3.2292 to 3.2298)		90.993 to 91.007 (3.5823 to 3.5829)
Cylinder taper		Maximum New	mm (in)	0.038 (.0015)		
		Service limit	mm (in)	0.090 (.0035)		
Cylinder out of round		Maximum New	mm (in)	0.015 (.0006)		
		Service limit	mm (in)	0.020 (.0008)		
Camshaft main bearing journal	Timing chain side	New	mm (in)	34.959 to 34.975 (1.3763 to 1.3770)		
		Service limit	mm (in)	34.950 (1.3760)		
	Spark plug side	New	mm (in)	21.959 to 21.980 (.8645 to .8654)		
		Service limit	mm (in)	21.950 (.8642)		
Camshaft main bearing journal bore	Timing chain side	New	mm (in)	35.000 to 35.025 (1.3780 to 1.3789)		
		Service limit	mm (in)	35.040 (1.3795)		
	Spark plug side	New	mm (in)	22.000 to 22.021 (.8661 to .8670)		
		Wear limit	mm (in)	22.040 (.8677)		
Camshaft lobe	Intake valve	New	mm (in)	31.830 to 32.030 (1.2531 to 1.2610)	32.11 to 32.31 (1.2642 to 1.2721)	
		Service limit	mm (in)	31.810 (1.2524)	32.09 (1.2634)	
	Exhaust valve	New	mm (in)	31.730 to 31.930 (1.2492 to 1.2571)	31.94 to 32.14 (1.2575 to 1.2654)	
		Service limit	mm (in)	31.710 (1.2484)	31.92 (1.2567)	

www.midwestmanuals.com
Sales@midwestmanuals.com

www.midwestmanuals.com

MODEL				OUTLANDER™ 500	OUTLANDER™ 650	OUTLANDER™ 800
ENGINE (cont'd)						
Crankshaft main journal diameter MAG/PTO side		New	mm (in)	42.024 to 42.040 (1.6545 to 1.6551)		
		Service limit	mm (in)	42.000 (1.6535)		
Crankshaft radial play MAG/PTO side		Service limit	mm (in)	0.07 (.0031)		
Crankshaft main journal diameter PTO support bearing		New	mm (in)	34.024 to 34.040 (1.3395 to 1.3402)		
		Service limit	mm (in)	34.010 (1.3390)		
Crankshaft radial play PTO support bearing		Service limit	mm (in)	0.10 (.0039)		
Crankshaft pin diameter		New	mm (in)	35.064 to 35.080 (1.3805 to 1.3811)	40.009 to 40.025 (1.5752 to 1.5758)	
		Service limit	mm (in)	35.050 (1.3800)	39.990 (1.5744)	
Crankshaft deflection	MAG/PTO side	New	mm (in)	0.050 (.002)		
Crankcase plain bearing	MAG/PTO side	Service limit	mm (in)	42.100 (1.6575)		
PTO cover plain bearing		Service limit	mm (in)	34.120 (1.3433)		
Connecting rod big end diameter		Service limit	mm (in)	35.150 (1.3839)	40.100 (1.579)	
Connecting rod big end radial play		Service limit	mm (in)	0.09 (.0035)		
Connecting rod big end axial play		New	mm (in)	0.200 to 0.500 (.008 to .020)		
		Service limit	mm (in)	0.600 (.024)		
Connecting rod small end diameter		New	mm (in)	18.010 to 18.020 (.7091 to .7095)	20.010 to 20.020 (.7878 to .7882)	
		Service limit	mm (in)	18.060 (.7110)	20.060 (.7898)	
Piston pin diameter		New	mm (in)	17.996 to 18.000 (.7085 to .7087)	19.996 to 20.000 (.7872 to .7874)	
		Service limit	mm (in)	17.980 (.7079)	19.980 (.7866)	
Connecting rod/piston pin clearance (radial play)		Service limit	mm (in)	0.080 (.0035)		
GEARBOX						
Type				Dual range (HI-LO) with park, neutral and reverse		
Gearbox oil		Capacity		400 mL (14 U.S. oz)		
		Recommended		XP-S chaincase oil		
Output shaft backlash		New	mm (in)	0.10 to 0.20 (.0039 to .0079)		
		Service limit	mm (in)	0.25 (.0098)		
Bevel gear axial play		New	mm (in)	0.02 to 0.15 (.0008 to .0059)		
		Service limit	mm (in)	0.19 (.0075)		
Shifting sleeve groove width		New	mm (in)	5.25 to 5.35 (.207 to .211)		
		Service limit	mm (in)	5.50 (.217)		
Shifting fork claw thickness		New	mm (in)	4.95 to 5.05 (.195 to .199)		
		Service limit	mm (in)	4.80 (.189)		
Shift fork claw thickness (for high gear shifting)		New	mm (in)	4.80 to 4.90 (.189 to .193)		
		Service limit	mm (in)	4.70 (.185)		
Shift fork claw thickness (for low/reverse gear shifting)		New	mm (in)	5.10 to 5.20 (.201 to .205)		
		Service limit	mm (in)	5.00 (.197)		
Shift fork pin diameter		New	mm (in)	6.920 to 6.970 (.272 to .274)		
		Service limit	mm (in)	6.850 (.270)		

www.midwestmanuals.com
Sales@midwestmanuals.com

www.midwestmanuals.com

MODEL				OUTLANDER™ 500	OUTLANDER™ 650	OUTLANDER™ 800
ENGINE (cont'd)						
Gap of shift fork engagement groove (high gear shifting)		New	mm (in)	5.00 to 5.10 (.197 to .201)		
		Service limit	mm (in)	5.20 (.205)		
Gap of shift fork engagement groove (low/reverse gear shifting)		New	mm (in)	5.30 to 5.40 (.209 to 213)		
		Service limit	mm (in)	5.50 (.217)		
Diameter free pinions		New	mm (in)	29.000 to 29.013 (1.1417 to 1.1422)		
		Service limit	mm (in)	29.015 (1.1422)		
Intermediate gear shaft		New	mm (in)	24.979 to 25.000 (.983 to .984)		
		Service limit	mm (in)	24.977 (.983)		
Countershaft	Right side	Service limit	mm (in)	17.990 (.708)		
	Free pinion bearing			24.970 (.983)		
	CVT side			24.970 (.983)		
Bevel gear shaft	Free pinion bearing	Service limit	mm (in)	24.984 (.984)		
COOLING SYSTEM						
Coolant		Type		Ethyl glycol/water mix (50% coolant, 50% water). Use premixed coolant sold by BRP (P/N 219 700 362) or coolant specifically designed for aluminum engines		
		Capacity		2.5 L (2.65 quarts)		
Thermostat		Opening temperature		65°C (149°F)		
ELECTRICAL SYSTEM						
Magneto generator output				400 W @ 6000 RPM		
Ignition system type				IDI (Inductive Discharge Ignition)		
Ignition timing				Not adjustable		
Spark plug		Quantity		2		
		Make and type		NGK DCPR8E		
		Gap	mm (in)	0.6 to 0.7 (.024 to .027)		
Crankshaft position sensor (CPS)			Ω	774 to 946 @ 20 °C (68 °F)		
Engine RPM limiter setting		Forward	RPM	8000		
		Reverse	RPM	3200		
Battery		Type		Dry battery type		
		Voltage		12 volts		
		Nominal rating		18 A•h		
		Power starter output		0.7 KW		
Headlamp			W	2 x 35		
Taillight			W	7/29		
Director indicator (European Community models)			W	10		
Indicator lights				LEDS, 0.7 V approximately (each)		

www.midwestmanuals.com
Sales@midwestmanuals.com

www.midwestmanuals.com

MODEL				OUTLANDER™ 500	OUTLANDER™ 650	OUTLANDER™ 800
ELECTRICAL SYSTEM (cont'd)						
Fuses			Accessories	20 A		
			Fan	20 A		
			Main	30 A		
			Ignition coils	5 A		
			Fuel injectors	5 A		
			Speedometer/speed sensor/tail lamp	7.5 A		
			Fuel pump	7.5 A		
			Engine control module (ECM)	5 A		
			Main accessories	30 A		
FUEL SYSTEM						
Fuel delivery			Type	Electronic Fuel Injection (EFI), DeLorto 46 mm throttle body, 1 injector per cylinder		
Fuel pump			Type	Bosch		
			Model	Electrical (in fuel tank)		
Idle speed			RPM ± 50	1250 (not adjustable)		
Fuel	Type			Regular unleaded gasoline		
	Octane no.	Inside North America	(R+M)/2	87 or higher		
		Outside North America	RON	92 or higher		
Fuel tank capacity				20 L (5.3 U.S. gal)		
Remaining fuel in fuel tank when display light turns ON				± 6 L (1.6 U.S. gal)		
DRIVE TRAIN						
Front drive				Shaft driven/Auto-lock differential (shear pump)		
Front drive ratio				3.6:1		
Rear drive				Shaft driven/locked differential		
Rear drive ratio				3.6:1		
Differential oil	Capacity	Front		500 mL (17 U.S. oz)		
		Rear		250 mL (8.5 U.S. oz)		
	Recommended			BRP differential oil (P/N 293 600 043) or synthetic oil 75W90 (API GL5)		
CV joint grease				CV joint grease (P/N 293 550 019)		
Propeller shaft grease				XP-S synthetic grease (P/N 293 550 010)		

www.midwestmanuals.com
Sales@midwestmanuals.com

www.midwestmanuals.com

MODEL			OUTLANDER™ 500	OUTLANDER™ 650	OUTLANDER™ 800
TRANSMISSION					
Type			CVT (Continuously Variable Transmission)		
Engagement RPM		± 100 RPM	1750		
CVT					
Drive belt width	Service limit	mm (in)	30.00 (1.181)		
Governor cup roller outer diameter	New	mm (in)	13.70 to 13.80 (.539 to .543)		
	Service limit	mm (in)	13.20 (.519)		
Governor cup roller inner diameter	New	mm (in)	8.05 to 8.15 (.317 to .321)		
	Service limit	mm (in)	9.00 (.354)		
Centrifugal lever pivot bolt diameter	New	mm (in)	6.078 to 6.100 (.239 to .240)		
	Service limit	mm (in)	6.000 (.236)		
Centrifugal lever bore diameter	Service limit	mm (in)	6.200 (.244)		
Drive pulley sliding half centrifugal lever pivot bolt bore diameter	New	mm (in)	6.113 to 6.171 (.241 to .243)		
	Service limit	mm (in)	6.300 (.248)		
Drive pulley sliding half large bushing	New	mm (in)	55.000 to 55.040 (2.165 to 2.167)		
	Service limit	mm (in)	55.200 (2.173)		
Drive pulley sliding half small bushing	New	mm (in)	32.000 to 32.040 (1.260 to 1.261)		
	Service limit	mm (in)	32.200 (1.268)		
Driven pulley sliding half bushing	New	mm (in)	30.060 to 30.100 (1.183 to 1.185)		
	Service limit	mm (in)	30.200 (1.189)		
Driven pulley sliding fixed bushing	New	mm (in)	30.060 to 30.100 (1.183 to 1.185)		
	Service limit	mm (in)	30.200 (1.189)		
Torque gear on driven pulley	Service limit	mm (in)	7.500 (.295)		
STEERING					
Turning radius	Standard		2.16 m (7 ft)		
	MAX		4.80 m (7 ft 9 in)		
Total toe (vehicle on ground)		mm (in)	0 (0)		
Camber angle			0°		
Tie-rod maximum length unengaged		mm (in)	17.5 ± 5 (11/16 ± 3/16)		
SUSPENSION					
FRONT					
Suspension type			MacPherson	Double A-Arm	
Suspension travel		mm (in)	178 (7)	203 (8)	
Shock absorber		Qty	2		
		Type	Oil		
Spring free length	Standard	mm (in)	372 (14-5/8)	349 (13-3/4)	
	XT	mm (in)	387 (15-1/4)	359 (14-1/8)	
	MAX	mm (in)	372 (14-21/32)	358 (14-3/32)	
	MAX XT	mm (in)	387 (15-15/64)	369 (14-17/32)	
	LTD	mm (in)	—	—	369 (14-17/32)

www.midwestmanuals.com
Sales@midwestmanuals.com

www.midwestmanuals.com

MODEL			OUTLANDER™ 500	OUTLANDER™ 650	OUTLANDER™ 800
SUSPENSION (cont'd)					
Spring color code	Standard		Silver/Blue/Gold	Green/Gold/Green	
	XT		White/Blue/Gold	White/Red/Gold	
	MAX		Silver/Blue/Gold	Gold/Yellow/Blue	
	MAX XT		White/Blue/Gold	Silver/Red/Gold	
	LTD		—	—	Silver/Red/Gold
Front preload adjustment			N.A.	5 settings	
REAR					
Suspension type			TTI™ independent		
Suspension travel		mm (in)	229 (9)		
Shock absorber		Qty	2		
		Type	Oil		
Spring free length	Standard and XT	mm (in)	354 (13-15/16)		
	MAX and MAX XT	mm (in)	364 (14-21/64)		
	LTD	mm (in)	—	—	364 (14-21/64)
Spring color code	Standard and XT		Gold/Blue/Gold		
	MAX and MAX XT		Gold/Green/Gold		
	LTD		—	—	Gold/Green/Gold
Rear preload adjustment			5 settings		
BRAKES					
Front brake		Qty	2		
		Type	Hydraulic, discs		
Rear brake		Qty	1		
		Type	Hydraulic, disc		
Brake fluid	Capacity		180 mL (6.1 U.S. oz)		
	Type		DOT 4		
Parking brake			Hydraulic lock-4 wheels		
Caliper			Floating		
Brake pad material		Front	Organic		
		Rear	Metallic		
Minimum brake pad thickness		mm (in)	1 (.04)		
Minimum brake disc thickness	Front	mm (in)	3.5 (.138)		
	Rear	mm (in)	4.3 (.17)		
Maximum brake disc warpage		mm (in)	0.2 (.01)		

www.midwestmanuals.com
Sales@midwestmanuals.com

www.midwestmanuals.com

MODEL				OUTLANDER™ 500	OUTLANDER™ 650	OUTLANDER™ 800
TIRES AND WHEELS						
TIRES						
Pressure	1-UP Models	Front	kPa (PSI)	Maximum: 34.5 (5) Minimum: 31 (4.5)	Maximum: 48 (7) Minimum: 31 (4.5)	
		Rear	kPa (PSI)	Maximum: 34.5 (5) Minimum: 31 (4.5)	Maximum: 48 (7) Minimum: 31 (4.5)	
	2-UP Models	Front	kPa (PSI)	Maximum: 34.5 (5) Minimum: 31 (4.5)	Maximum: 48 (7) Minimum: 31 (4.5)	
		Rear	kPa (PSI)	Maximum: 34.5 (5) Minimum: 31 (4.5)	Maximum: 48 (7) Minimum: 31 (4.5)	
Minimum tire thread depth			mm (in)	3 (0.118)		
Size		Front		25 x 8 x 12	26 x 8 x 12	
		Rear		25 x 10 x 12 XT: 25 x 11 x 12	26 x 10 x 12	
WHEELS						
Size		Front		12 x 6		
		Rear		12 x 7.5		
DIMENSION						
Overall length		Standard	m (in)	2.18 (86)		
		MAX	m (in)	2.39 (94)		
Overall width			m (in)	1.17 (46)		
Overall height			m (in)	1.14 (45)		
Dry weight		Standard	kg (lb)	287 (634)	295 (649)	290 (639)
		MAX	kg (lb)	310 (684)	318 (699)	313 (689)
Wheel base		Standard	m (in)	1.30 (51)		
		MAX	m (in)	1.50 (59)		
Wheel track		Front	mm (in)	965 (38)		
		Rear	mm (in)	914 (36)		
Ground clearance			mm (in)	279 (11)		
LOADING CAPACITY						
Weight distribution		Front/rear	%	51/49 MAX: 48/52		
Rear storage box (included with rear rack weight)			kg (lb)	10 (22)		
Rack		Front	kg (lb)	45 (100)		
		Rear	kg (lb)	90 (200) (including rear storage box and tongue weight)		
Total vehicle load allowed (including driver, all other loads and added accessories)		Standard	kg (lb)	235 (517)		
		MAX	kg (lb)	272 (600)		
Gross vehicle weight rating		Standard	kg (lb)	553 (1220) XT: 584 (1287)	584 (1287)	
		MAX	kg (lb)	558 (1228)	649 (1430)	
Towing capacity			kg (lb)	591 (1300)		
Tongue capacity (included with rear rack weight)			kg (lb)	23 (50)		

www.midwestmanuals.com
Sales@midwestmanuals.com

www.midwestmanuals.com

MODEL			OUTLANDER™ 500	OUTLANDER™ 650	OUTLANDER™ 800
MATERIAL					
Frame	Material		Steel		
	Color		Black		
Wheel	Material	All except Camo	Aluminum		
		Camo/ Camo XT	Steel		
	Color	All except Camo	Aluminum		
		Camo/ Camo XT	Black		
Front/rear rack	Material		Steel		
	Color		Black		
Front bumper	Material		Aluminum		
	Color		Aluminum		
Front/rear fender	Material		High density polyethylene		
	Color		Yellow/Laurentian green/Viper red/Camo/Steel grey metallic		
Fuel tank protector(s)	Material		High density polyethylene		
	Color		Black		
Steering cover	Material		High density polyethylene		
	Color		Black		
Storage compartment cover	Material		Polypropylene (glass fiber-reinforced)		
	Color		Black		
Front fascia	Material		High density polyethylene		
	Color		Yellow/Laurentian green/Viper red/Camo/Steel grey metallic		
Front skid plate	Material		High density polyethylene		
	Color		Black		
Side panel	Material		High density polyethylene		
	Color		Yellow/Laurentian green/Viper red/Camo/Steel grey metallic		
Foot rest	Material		High density polyethylene		
	Color		Black		
Central panel	Material		High density polyethylene		
	Color		Yellow/Laurentian green/Viper red/Camo/Steel grey metallic		
Air filter housing cover	Material		Polypropylene (glass fiber-reinforced)		
	Color		Black		
Air filter housing	Material		Polypropylene (glass fiber-reinforced)		
	Color		Black		
Transmission lever locator	Material		Polypropylene (glass fiber-reinforced)		
	Color		Black		
A-arm protector	Material		Polypropylene		
	Color		Black		

www.midwestmanuals.com
Sales@midwestmanuals.com

www.midwestmanuals.com

MODEL		OUTLANDER™ 500	OUTLANDER™ 650	OUTLANDER™ 800
MATERIAL (cont'd)				
Engine cover	Material	High density polyethylene		
	Color	Black		
Seat base	Material	Polypropylene		
	Color	Black		
Seat cover	Material	Thermoformed vinyl		
	Color	Black LTD models: Steel grey metallic and Black		



sales@midwestmanuals.com
www.midwestmanuals.com

www.midwestmanuals.com
Sales@midwestmanuals.com

www.midwestmanuals.com

RENEGADE MODELS

MODEL				RENEGADE™ 500	RENEGADE™ 800
ENGINE					
Engine type				ROTAX® V490	ROTAX® V810
				4-stroke, Single Over Head Camshaft (SOHC), liquid cooled	
Number of cylinders				2	
Number of valves				8 valves (mechanical adjustment)	
Bore			mm (in)	82.03 (3.23)	91 (3.58)
Stroke			mm (in)	47.3 (1.86)	61.5 (2.42)
Displacement			cm^3 (in^3)	500 (30.51)	800 (48.82)
Compression ratio				10.7:1	10.3:1
Decompressor type				N.A.	
Maximum HP RPM			RPM	7250	6750
Lubrication	Type			Wet sump. Replaceable oil filter	
	Oil filter			BRP Rotax paper type, replaceable	
	Engine oil pressure	Minimum		350 kPa (51 PSI) at 6000 RPM	
	Engine oil	Capacity (oil change with filter)		2 L (2.11 quarts)	
		Recommended		SAE 5W30 API classification SM, SL or SJ see *OIL VISCOSITY CHART* in *LUBRICATION SYSTEM*	
Intake valve opening				3° BTDC	5° BTDC
Intake valve closing				34° ABDC	45° ABDC
Exhaust valve opening				39° BBDC	50° BBDC
Exhaust valve closing				2° ATDC	0° ATDC
Chain tensioner plunger protrusion		Service limit	mm (in)	20.0 (.7874)	
Valve clearance	Intake		mm (in)	0.06 to 0.14 (.0024 to .0055)	
	Exhaust		mm (in)	0.11 to 0.19 (.0043 to .0075)	
Valve stem diameter	Intake	New	mm (in)	4.966 to 4.980 (.1955 to .1960)	
		Service limit	mm (in)	4.930 (.1941)	
	Exhaust	New	mm (in)	4.956 to 4.970 (.1951 to .1957)	
		Service limit	mm (in)	4.930 (.1941)	
Valve out of round	Intake and exhaust	New	mm (in)	0.005 (.0002)	
		Service limit	mm (in)	0.06 (.0024)	
Valve guide diameter		New	mm (in)	5.006 to 5.018 (.1971 to .1976)	
		Service limit	mm (in)	5.050 (.1988)	
Valve spring free length		New	mm (in)	40.81 (1.607)	
		Service limit	mm (in)	39.00 (1.535)	
Valve seat contact width	Intake	New	mm (in)	1.05 to 1.35 (.041 to .053)	
		Service limit	mm (in)	1.8 (.070)	
	Exhaust	New	mm (in)	1.25 to 1.55 (.049 to .061)	
		Service limit	mm (in)	2 (.078)	

www.midwestmanuals.com
Sales@midwestmanuals.com

www.midwestmanuals.com

MODEL				RENEGADE™ 500	RENEGADE™ 800
ENGINE (cont'd)					
Rocker arm bore diameter		New	mm (in)	12.036 to 12.050 (.4739 to .4744)	
		Service limit	mm (in)	12.060 (.4748)	
Rocker arm shaft diameter		New	mm (in)	12.000 to 12.018 (.4724 to .4731)	
		Service limit	mm (in)	11.990 (.4720)	
Piston measurement		New	mm (in)	81.950 to 81.966 (3.2264 to 3.2270)	90.950 to 90.966 (3.5807 to 3.5813)
		Service limit	mm (in)	81.850 (3.2224)	90.850 (3.577)
Piston/cylinder clearance		New	mm (in)	0.057 (.0022)	0.027 (.0011)
		Service limit	mm (in)	0.130 (.0051)	0.100 (.0040)
Piston ring type		1st		Upper compression ring, rectangular	
		2nd		Lower compression ring, tapered face	
		3rd		Oil scraper ring	
Ring end gap	Rectangular	New	mm (in)	0.20 to 0.40 (.008 to .016)	
	Taper-face			0.20 to 0.40 (.008 to .016)	
	Oil scraper ring			0.20 to 0.70 (.008 to .028)	
	All	Service limit	mm (in)	1.5 (.059)	
Ring/piston groove clearance	Rectangular	New	mm (in)	0.03 to 0.070 (.0012 to .0028)	
	Taper-face			0.02 to 0.060 (.0008 to .0024)	
	Oil scraper ring			0.01 to 0.018 (.0004 to .0007)	
	Rectangular	Service limit	mm (in)	0.15 (.0059)	
	Taper-face			0.15 (.0059)	
	Oil scraper ring			0.25 (.0098)	
Cylinder bore		New	mm (in)	82.023 to 82.037 (3.2292 to 3.2298)	90.993 to 91.007 (3.5823 to 3.5829)
Cylinder taper		Maximum New	mm (in)	0.038 (.0015)	
		Service limit	mm (in)	0.090 (.0035)	
Cylinder out of round		Maximum New	mm (in)	0.015 (.0006)	
		Service limit	mm (in)	0.020 (.0008)	
Camshaft main bearing journal	Timing chain side	New	mm (in)	34.959 to 34.975 (1.3763 to 1.3770)	
		Service limit	mm (in)	34.950 (1.3760)	
	Spark plug side	New	mm (in)	21.959 to 21.980 (.8645 to .8654)	
		Service limit	mm (in)	21.950 (.8642)	
Camshaft main bearing journal bore	Timing chain side	New	mm (in)	35.000 to 35.025 (1.3780 to 1.3789)	
		Service limit	mm (in)	35.040 (1.3795)	
	Spark plug side	New	mm (in)	22.000 to 22.021 (.8661 to .8670)	
		Wear limit	mm (in)	22.040 (.8677)	
Camshaft lobe	Intake valve	New	mm (in)	31.830 to 32.030 (1.2531 to 1.2610)	32.11 to 32.31 (1.2642 to 1.2721)
		Service limit	mm (in)	31.810 (1.2524)	32.09 (1.2634)
	Exhaust valve	New	mm (in)	31.730 to 31.930 (1.2492 to 1.2571)	31.94 to 32.14 (1.2575 to 1.2654)
		Service limit	mm (in)	31.710 (1.2484)	31.92 (1.2567)

www.midwestmanuals.com
Sales@midwestmanuals.com

www.midwestmanuals.com

MODEL				RENEGADE™ 500	RENEGADE™ 800
ENGINE (cont'd)					
Crankshaft main journal diameter MAG/PTO side		New	mm (in)	42.024 to 42.040 (1.6545 to 1.6551)	
		Service limit	mm (in)	42.000 (1.6535)	
Crankshaft radial play MAG/PTO side		Service limit	mm (in)	0.07 (.0031)	
Crankshaft main journal diameter PTO support bearing		New	mm (in)	34.024 to 34.040 (1.3395 to 1.3402)	
		Service limit	mm (in)	34.010 (1.3390)	
Crankshaft radial play PTO support bearing		Service limit	mm (in)	0.10 (.0039)	
Crankshaft pin diameter		New	mm (in)	35.064 to 35.080 (1.3805 to 1.3811)	40.009 to 40.025 (1.5752 to 1.5758)
		Service limit	mm (in)	35.050 (1.3800)	39.990 (1.5744)
Crankshaft deflection	MAG/PTO side	New	mm (in)	0.050 (.002)	
Crankcase plain bearing	MAG/PTO side	Service limit	mm (in)	42.100 (1.6575)	
PTO cover plain bearing		Service limit	mm (in)	34.120 (1.3433)	
Connecting rod big end diameter		Service limit	mm (in)	35.150 (1.3839)	40.100 (1.579)
Connecting rod big end radial play		Service limit	mm (in)	0.09 (.0035)	
Connecting rod big end axial play		New	mm (in)	0.200 to 0.500 (.008 to .020)	
		Service limit	mm (in)	0.600 (.024)	
Connecting rod small end diameter		New	mm (in)	18.010 to 18.020 (.7091 to .7095)	20.010 to 20.020 (.7878 to .7882)
		Service limit	mm (in)	18.060 (.7110)	20.060 (.7898)
Piston pin diameter		New	mm (in)	17.996 to 18.000 (.7085 to .7087)	19.996 to 20.000 (.7872 to .7874)
		Service limit	mm (in)	17.980 (.7079)	19.980 (.7866)
Connecting rod/piston pin clearance (radial play)		Service limit	mm (in)	0.080 (.0035)	
GEARBOX					
Type				Dual range (HI-LO) with park, neutral and reverse	
Gearbox oil		Capacity		400 mL (14 U.S. oz)	
		Recommended		XP-S chaincase oil	
Output shaft backlash		New	mm (in)	0.10 to 0.20 (.0039 to .0079)	
		Service limit	mm (in)	0.25 (.0098)	
Bevel gear axial play		New	mm (in)	0.02 to 0.15 (.0008 to .0059)	
		Service limit	mm (in)	0.19 (.0075)	
Shifting sleeve groove width		New	mm (in)	5.25 to 5.35 (.207 to .211)	
		Service limit	mm (in)	5.50 (.217)	
Shifting fork claw thickness		New	mm (in)	4.95 to 5.05 (.195 to .199)	
		Service limit	mm (in)	4.80 (.189)	
Shift fork claw thickness (for high gear shifting)		New	mm (in)	4.80 to 4.90 (.189 to .193)	
		Service limit	mm (in)	4.70 (.185)	
Shift fork claw thickness (for low/reverse gear shifting)		New	mm (in)	5.10 to 5.20 (.201 to .205)	
		Service limit	mm (in)	5.00 (.197)	
Shift fork pin diameter		New	mm (in)	6.920 to 6.970 (.272 to .274)	
		Service limit	mm (in)	6.850 (.270)	

www.midwestmanuals.com
Sales@midwestmanuals.com

www.midwestmanuals.com

MODEL			RENEGADE™ 500	RENEGADE™ 800
ENGINE (cont'd)				
Gap of shift fork engagement groove (high gear shifting)		New mm (in)	5.00 to 5.10 (.197 to .201)	
		Service limit mm (in)	5.20 (.205)	
Gap of shift fork engagement groove (low/reverse gear shifting)		New mm (in)	5.30 to 5.40 (.209 to 213)	
		Service limit mm (in)	5.50 (.217)	
Diameter free pinions		New mm (in)	29.000 to 29.013 (1.1417 to 1.1422)	
		Service limit mm (in)	29.015 (1.1422)	
Intermediate gear shaft		New mm (in)	24.979 to 25.000 (.983 to .984)	
		Service limit mm (in)	24.977 (.983)	
Countershaft	Right side	Service limit mm (in)	17.990 (.708)	
	Free pinion bearing		24.970 (.983)	
	CVT side		24.970 (.983)	
Bevel gear shaft	Free pinion bearing	Service limit mm (in)	24.984 (.984)	
COOLING SYSTEM				
Coolant		Type	Ethyl glycol/water mix (50% coolant, 50% water). Use premixed coolant sold by BRP (P/N 219 700 362) or coolant specifically designed for aluminum engines	
		Capacity	2.5 L (2.65 quarts)	
Thermostat		Opening temperature	65°C (149°F)	
ELECTRICAL SYSTEM				
Magneto generator output			400 W @ 6000 RPM	
Ignition system type			IDI (Inductive Discharge Ignition)	
Ignition timing			Not adjustable	
Spark plug		Quantity	2	
		Make and type	NGK DCPR8E	
		Gap mm (in)	0.6 to 0.7 (.024 to .027)	
Crankshaft position sensor (CPS)		Ω	774 to 946 @ 20 °C (68 °F)	
Engine RPM limiter setting		Forward RPM	8000	
		Reverse RPM	3200	
Battery		Type	Dry battery type	
		Voltage	12 volts	
		Nominal rating	18 A•h	
		Power starter output	0.7 KW	
Headlamp		W	2 x 35	
Taillight		W	7/29	
Director indicator (European Community models)		W	10	
Indicator lights			LEDS, 0.7 V approximately (each)	

www.midwestmanuals.com
Sales@midwestmanuals.com

www.midwestmanuals.com

MODEL				RENEGADE™ 500	RENEGADE™ 800
ELECTRICAL SYSTEM (cont'd)					
Fuses			Accessories	20 A	
			Fan	20 A	
			Main	30 A	
			Ignition coils	5 A	
			Fuel injectors	5 A	
			Speedometer/speed sensor/tail lamp	7.5 A	
			Fuel pump	7.5 A	
			Engine control module (ECM)	5 A	
			Main accessories	30 A	
FUEL SYSTEM					
Fuel delivery			Type	Electronic Fuel Injection (EFI), DeLorto 46 mm throttle body, 1 injector per cylinder	
Fuel pump			Type	Bosch	
			Model	Electrical (in fuel tank)	
Idle speed			RPM ± 50	1250 (not adjustable)	
Fuel	Type			Regular unleaded gasoline	
	Octane no.	Inside North America	(R+M)/2	87 or higher	
		Outside North America	RON	92 or higher	
Fuel tank capacity				20 L (5.3 U.S. gal)	
Remaining fuel in fuel tank when display light turns ON				± 6 L (1.6 U.S. gal)	
DRIVE TRAIN					
Front drive				Shaft driven/Auto-lock differential (shear pump)	
Front drive ratio				3.6:1	
Rear drive				Shaft driven/locked differential	
Rear drive ratio				3.6:1	
Differential oil	Capacity	Front		500 mL (17 U.S. oz)	
		Rear		250 mL (8.5 U.S. oz)	
	Recommended			BRP differential oil (P/N 293 600 043) or synthetic oil 75W90 (API GL5)	
CV joint grease				CV joint grease (P/N 293 550 019)	
Propeller shaft grease				XP-S synthetic grease (P/N 293 550 010)	

www.midwestmanuals.com
Sales@midwestmanuals.com

www.midwestmanuals.com

MODEL			RENEGADE™ 500	RENEGADE™ 800
TRANSMISSION				
Type			CVT (Continuously Variable Transmission)	
Engagement RPM		± 100 RPM	1750	
CVT				
Drive belt width	Service limit	mm (in)	30.00 (1.181)	
Governor cup roller outer diameter	New	mm (in)	13.70 to 13.80 (.539 to .543)	
	Service limit	mm (in)	13.20 (.519)	
Governor cup roller inner diameter	New	mm (in)	8.05 to 8.15 (.317 to .321)	
	Service limit	mm (in)	9.00 (.354)	
Centrifugal lever pivot bolt diameter	New	mm (in)	6.078 to 6.100 (.239 to .240)	
	Service limit	mm (in)	6.000 (.236)	
Centrifugal lever bore diameter	Service limit	mm (in)	6.200 (.244)	
Drive pulley sliding half centrifugal lever pivot bolt bore diameter	New	mm (in)	6.113 to 6.171 (.241 to .243)	
	Service limit	mm (in)	6.300 (.248)	
Drive pulley sliding half large bushing	New	mm (in)	55.000 to 55.040 (2.165 to 2.167)	
	Service limit	mm (in)	55.200 (2.173)	
Drive pulley sliding half small bushing	New	mm (in)	32.000 to 32.040 (1.260 to 1.261)	
	Service limit	mm (in)	32.200 (1.268)	
Driven pulley sliding half bushing	New	mm (in)	30.060 to 30.100 (1.183 to 1.185)	
	Service limit	mm (in)	30.200 (1.189)	
Driven pulley sliding fixed bushing	New	mm (in)	30.060 to 30.100 (1.183 to 1.185)	
	Service limit	mm (in)	30.200 (1.189)	
Torque gear on driven pulley	Service limit	mm (in)	7.500 (.295)	
STEERING				
Turning radius	Standard		2.16 m (7 ft)	
Total toe (vehicle on ground)		mm (in)	0 (0)	
Camber angle			0°	
Tie-rod maximum length unengaged		mm (in)	17.5 ± 5 (11/16 ± 3/16)	
SUSPENSION				
FRONT				
Suspension type			Double A-Arm	
Suspension travel		mm (in)	229 (9)	
Shock absorber		Qty	2	
		Type	Oil	Gas
Spring free length		mm (in)	319 (12-9/16)	
Spring color code			Silver/White/Green	
Front preload adjustment			5 settings	
REAR				
Suspension type			TTI™ independent	
Suspension travel		mm (in)	254 (10)	

www.midwestmanuals.com
Sales@midwestmanuals.com

www.midwestmanuals.com

MODEL			RENEGADE™ 500	RENEGADE™ 800
SUSPENSION (cont'd)				
Shock absorber		Qty	2	
		Type	Oil	Gas
Spring free length		mm (in)	381 (15)	348 (13-45/64)
Spring color code			Silver/Red/White	Gold/Gold/Green
Rear preload adjustment			5 settings	
BRAKES				
Front brake		Qty	2	
		Type	Hydraulic, discs	
Rear brake		Qty	1	
		Type	Hydraulic, disc	
Brake fluid	Capacity		180 mL (6.1 U.S. oz)	
	Type		DOT 4	
Parking brake			Hydraulic lock-4 wheels	
Caliper			Floating	
Brake pad material		Front	Organic	
		Rear	Metallic	
Minimum brake pad thickness		mm (in)	1 (.04)	
Minimum brake disc thickness	Front	mm (in)	3.5 (.138)	
	Rear	mm (in)	4.3 (.17)	
Maximum brake disc warpage		mm (in)	0.2 (.01)	
TIRES AND WHEELS				
TIRES				
Pressure	Front		Maximum: 48 kPa (7 PSI) Minimum: 34.5 kPa (5 PSI)	
	Rear		Maximum: 48 kPa (7 PSI) Minimum: 38 kPa (5.5 PSI)	
Minimum tire thread depth		mm (in)	3 (0.118)	
Size		Front	25 x 8 x 12	
		Rear	25 x 10 x 12	
WHEELS				
Size		Front	12 x 6	
		Rear	12 x 7.5	
DIMENSION				
Overall length		m (in)	2.18 (86)	
Overall width		m (in)	1.17 (46)	
Overall height		m (in)	1.14 (45)	
Dry weight		kg (lb)	275 (607)	
Wheel base		m (in)	1.30 (51)	
Wheel track	Front	mm (in)	965 (38)	
	Rear	mm (in)	914 (36)	
Ground clearance		mm (in)	279 (11)	

www.midwestmanuals.com
Sales@midwestmanuals.com

www.midwestmanuals.com

MODEL			RENEGADE™ 500	RENEGADE™ 800
LOADING CAPACITY				
Weight distribution	Front/rear	%	51/49	
Rear storage box		kg (lb)	3.7 (1)	
Rack	Rear	kg (lb)	16 (35)	
Total vehicle load allowed (including driver, all other loads and added accessories)		kg (lb)	141 (310)	
Gross vehicle weight rating		kg (lb)	476 (1050)	
Towing capacity		kg (lb)	591 (1300)	
MATERIAL				
Frame	Material		Steel	
	Color		Black	
Wheel	Material		Aluminum	
	Color		Aluminum	
Front bumper	Material		Aluminum	
	Color		Aluminum	
Front/rear fender	Material		High density polyethylene	
	Color		Yellow	
Fuel tank protector(s)	Material		High density polyethylene	
	Color		Black	
Steering cover	Material		Aluminum	
	Color		Aluminum	
Rear storage compartment	Material		Polypropylene (glass fiber-reinforced)	
	Color		Black	
Front grid	Material		High density polyethylene	
	Color		Black	
Front skid plate	Material		High density polyethylene	
	Color		Black	
Side panel	Material		High density polyethylene	
	Color		Black	
Foot rest	Material		High density polyethylene	
	Color		Black	
Central panel	Material		High density polyethylene	
	Color		Yellow	
Air filter housing cover	Material		Polypropylene (glass fiber-reinforced)	
	Color		Black	
Air filter housing	Material		Polypropylene (glass fiber-reinforced)	
	Color		Black	
Transmission lever locator	Material		Polypropylene (glass fiber-reinforced)	
	Color		Black	
A-arm protector	Material		Polypropylene	
	Color		Black	

www.midwestmanuals.com
Sales@midwestmanuals.com

www.midwestmanuals.com

MODEL		RENEGADE™ 500	RENEGADE™ 800
MATERIAL (cont'd)			
Engine cover	Material	High density polyethylene	
	Color	Black	
Seat base	Material	Polypropylene	
	Color	Black	
Seat cover	Material	Thermoformed vinyl	
	Color	Black	

www.midwestmanuals.com
Sales@midwestmanuals.com

www.midwestmanuals.com



sales@midwestmanuals.com
www.midwestmanuals.com

www.midwestmanuals.com
Sales@midwestmanuals.com

www.midwestmanuals.com

ELECTRICAL CONNECTORS

SERVICE TOOLS

Description	Part Number	Page
crimping pliers	529 035 730	435
crimper die	529 035 906	432
crimping tool	529 035 909	432

SERVICE TOOLS – OTHER SUPPLIER

Description	Part Number	Page
Snap-on terminal remover	TT600-1	432

DEUTSCH CONNECTORS

Deutsch connectors are used on some harnesses.

Removal from Engine Connector Bracket

To remove Deutsch connectors from engine connector bracket, slide a flat screwdriver between the connector bracket and the Deutsch connector and push out connector.

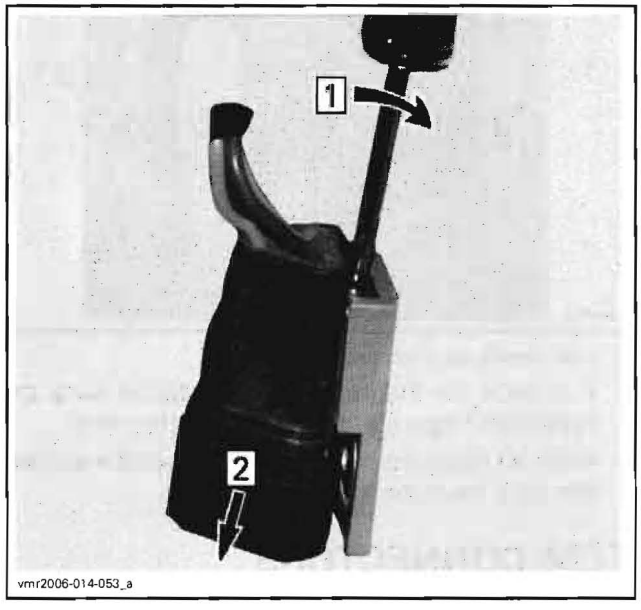

Connector Disassembly

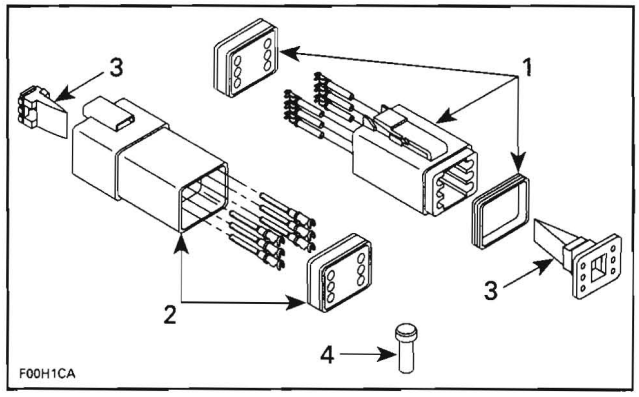

1. *Male connector*
2. *Female connector*
3. *Secondary locks*
4. *Sealing cap*

CAUTION: Do not apply dielectric grease on terminal inside connector.

To remove terminals from connector, proceed as follows:

– Using a long nose pliers, pull out the lock.

www.midwestmanuals.com
Sales@midwestmanuals.com

www.midwestmanuals.com

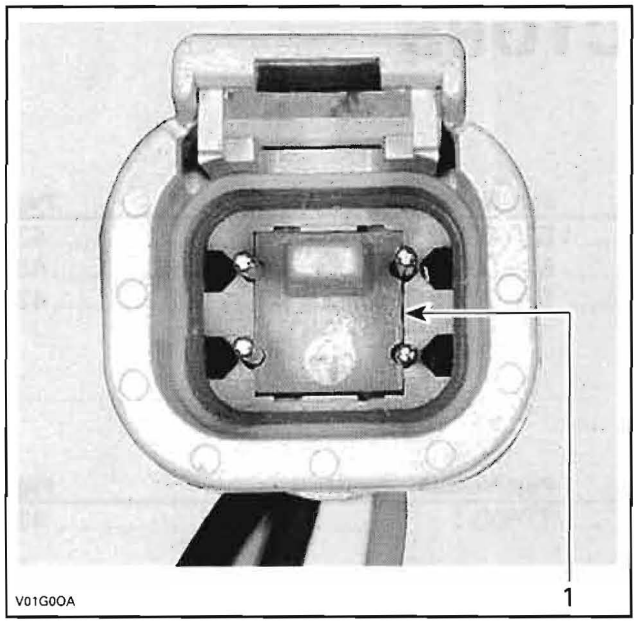

FEMALE CONNECTOR
1. Female lock

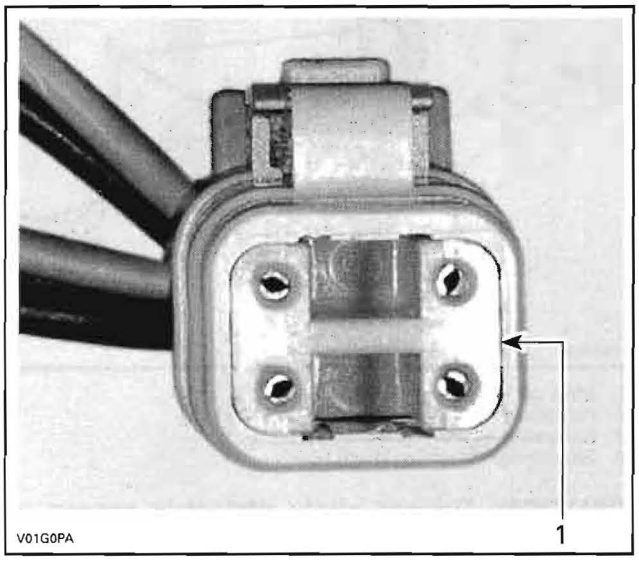

MALE CONNECTOR
1. Male lock

NOTE: Before extraction, push wire forward to relieve pressure on retaining tab.

- Insert a 4.8 mm (.189 in) wide screwdriver blade inside the front of the terminal cavity.
- Pry back the retaining tab while gently pulling wire back until terminal is removed.

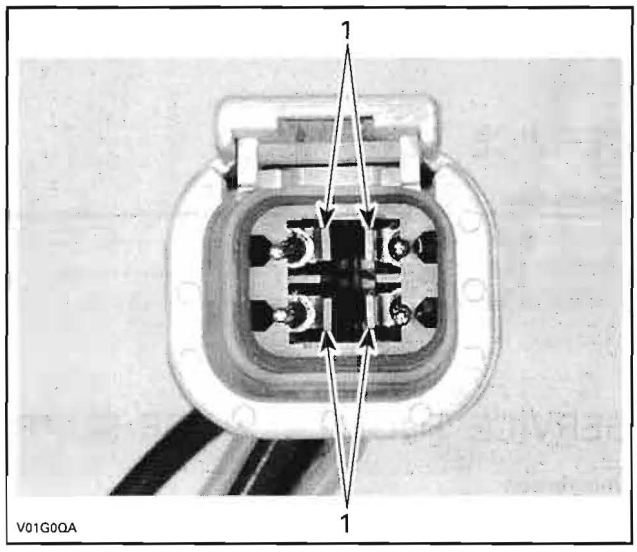

FEMALE CONNECTOR
1. Retaining tabs

To install:

- For insertion of a terminal, make sure the lock is removed.
- Insert terminal into appropriate cavity and push as far as it will go.

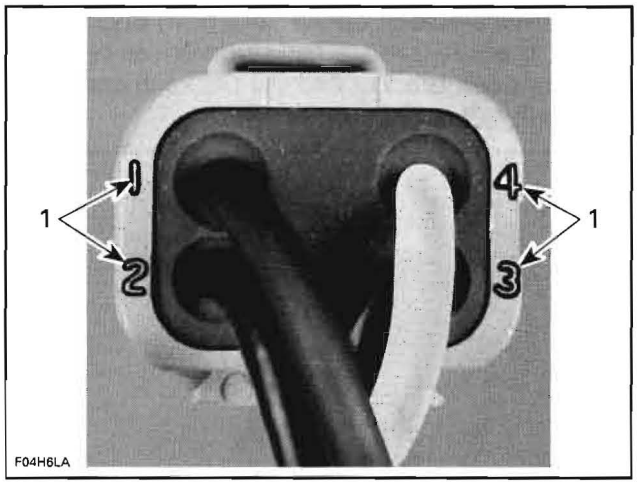

1. Wire identification numbers

- Pull back on the terminal wire to be sure the retention fingers are holding the terminal.
- After all required terminals have been inserted, the lock must be installed.

ECM CONNECTORS

There are two ECM connectors used and they are connected on the ECM. The engine harness female connector is connected on the module male connector "A" and the vehicle system control harness female connector is connected to the module male connector "B". The ECM connectors have 41 pins.

www.midwestmanuals.com
Sales@midwestmanuals.com

www.midwestmanuals.com

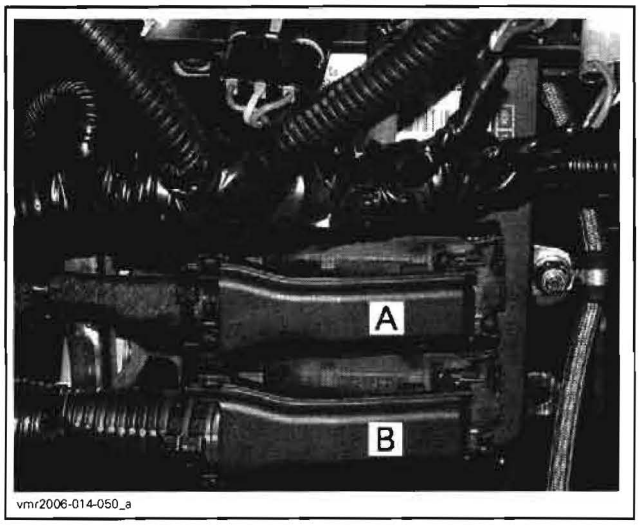

vmr2006-014-050_a

For probing techniques and tool, refer to *ENGINE MANAGEMENT*.

CAUTION: Do not disconnect the ECM connectors needlessly. They are not designed to be disconnected/reconnected frequently.

Terminal Removal

Unlock the connector cover by pushing in the tabs on top of the connector with a flat screwdriver to be able to flip the top cover up.

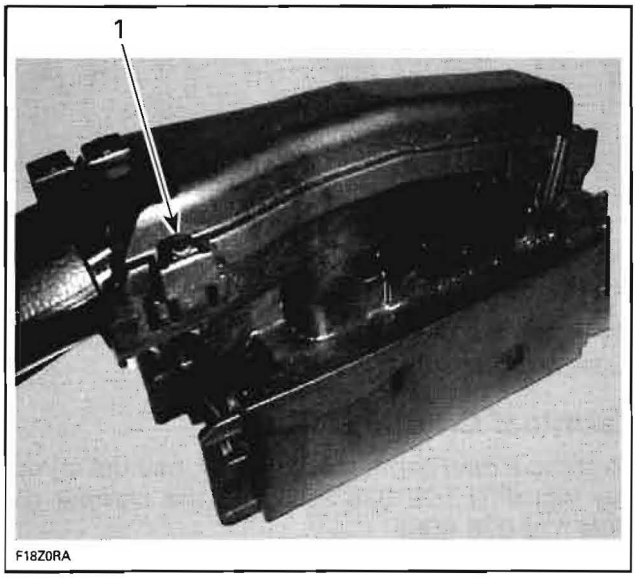

F18Z0RA

1. Push in tab

Lift the cover by pushing it forward.

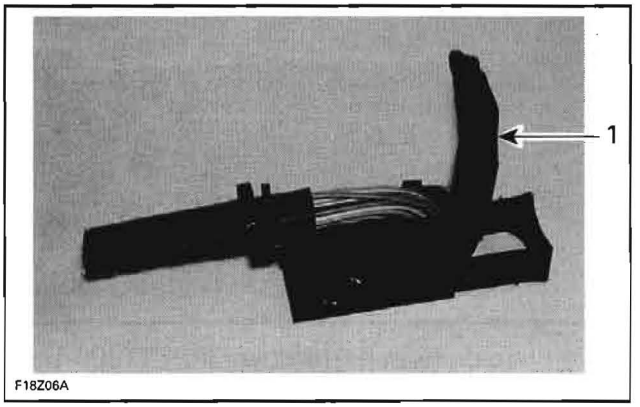

F18Z06A

1. Cover

Cut both tie raps that secure the harness to the connector.

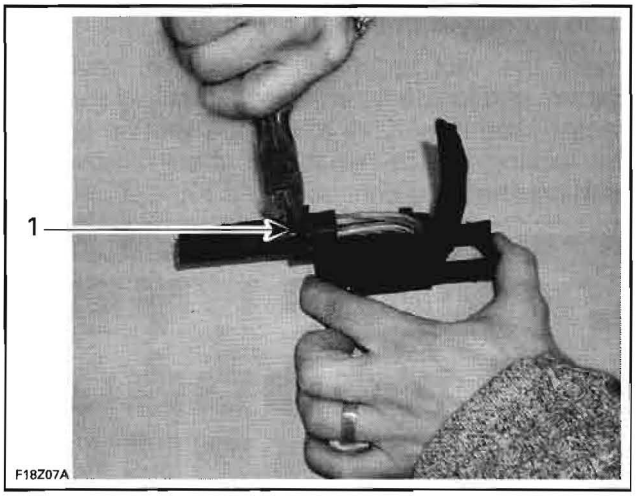

F18Z07A

1. Tie raps

Turn the connector over and remove the orange locking tab by pushing and then pulling toward the wire harness.

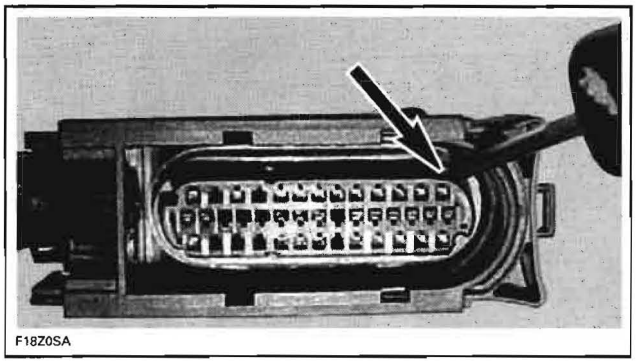
F18Z0SA

www.midwestmanuals.com
Sales@midwestmanuals.com

www.midwestmanuals.com

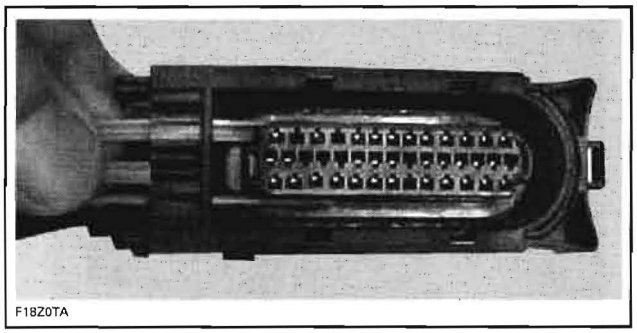
F18Z0TA

Use a Snap-on terminal remover (P/N TT600-1) (or a 0.76 mm (.030 in) oxyacetylene torch tip cleaner or a no. 68 drill bit) must be inserted into the terminal cavity to release the locking tab from the connector.

CAUTION: Using a tool tip larger than 0.76 mm (.030 in) may damage the terminal.

Insert the tool tip into the terminal cavity as shown, and locate its wire in the back of the connector. You may have to pry the tool tip against the locking tab to release it, then remove the terminal from the connector.

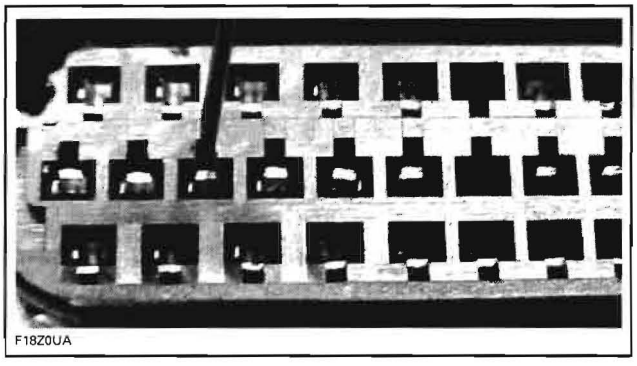
F18Z0UA

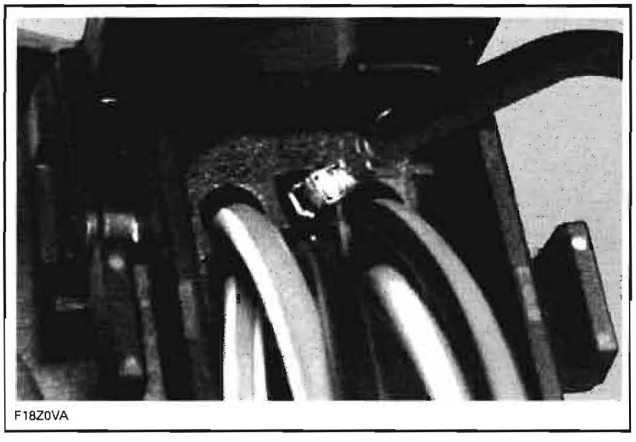
F18Z0VA

Check the locking tab on the terminal, it may have to be bent out a little so it will lock in its cavity when it is re-inserted.

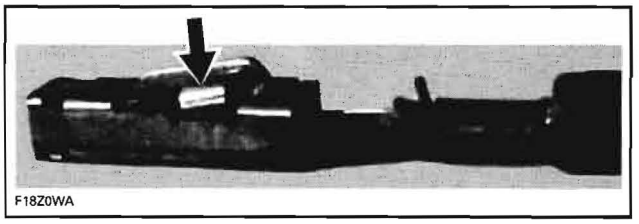
F18Z0WA

If the wire is in good condition but the terminal is rusted or corroded, remove defective terminal and crimp a new one. If wire and terminal are defective, replace with a new genuine wire and new terminal and crimp them together as explained below.

IMPORTANT: Use genuine wires only. Otherwise wires will not fit properly.

When re-inserting the terminal, the locking tab must be installed facing the smaller cutout of the terminal cavity.

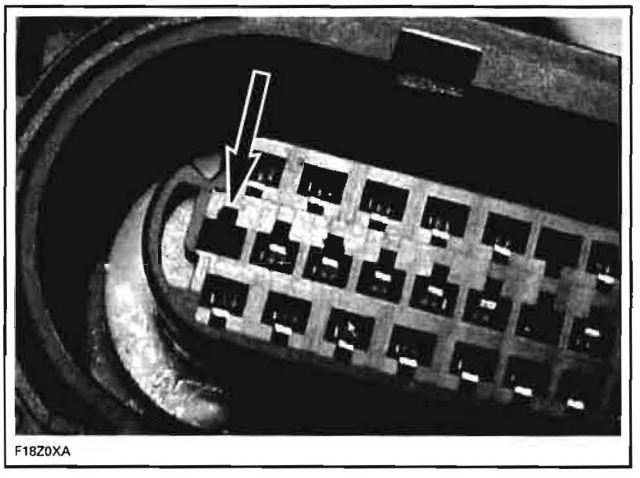
F18Z0XA

Insert the terminal, ensuring the locking tab snaps into its cavity.

Re-install the orange locking tab, attach the 2 tie raps, and close the connector cover.

Terminal Crimping (Kostal)

To crimp a new connector terminal, use the crimping tool (P/N 529 035 909) and the crimper die (P/N 529 035 906).

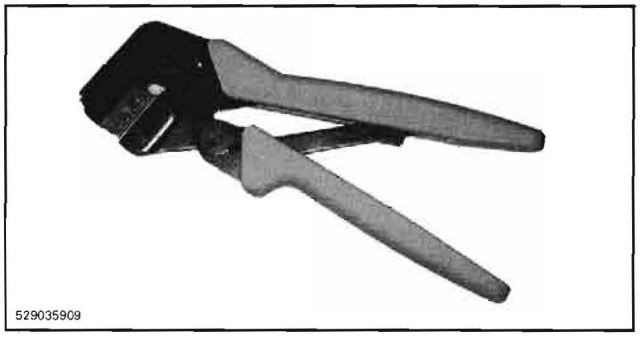
529035909

www.midwestmanuals.com
Sales@midwestmanuals.com

www.midwestmanuals.com

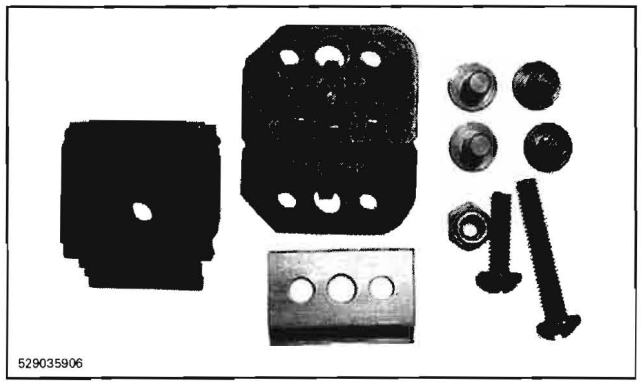

To properly crimp the wires, strictly follow this procedure.

Strip the wire to a maximum of 3 mm (1/8 in).

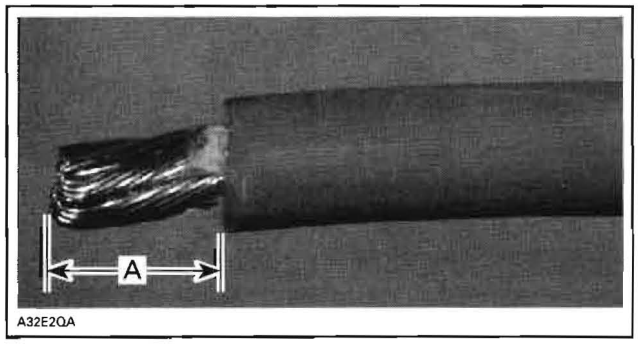

TYPICAL
A. 3 mm (1/8 in) max.

Position wire in terminal.

Squeeze the terminal tabs with your fingers to temporarily retain terminal in place.

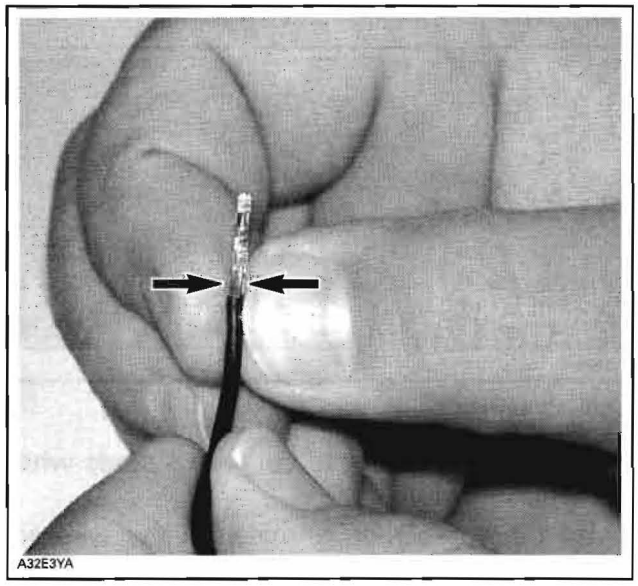

Insert terminal with wire in crimping pliers and position so that top of terminal tabs are flush with pliers edge or a little bit lower as shown.

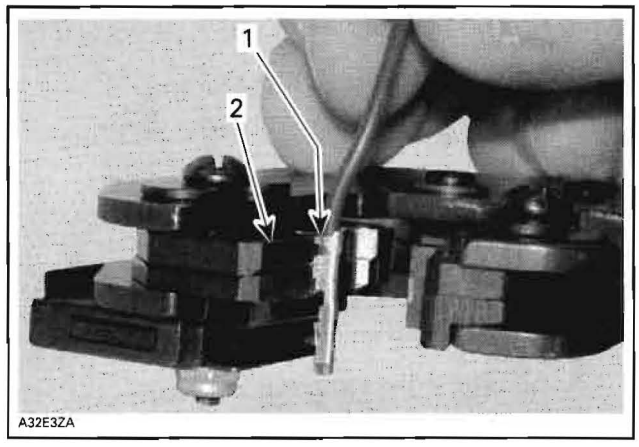

1. Top of terminal tabs
2. Align tabs with pliers edge

Crimp terminal. Ensure no tiny wire goes out of terminal. This might cause strange problems of the electrical system.

Lubrication

Do not apply any product to the pins of the connector on the ECM.

MULTIFUNCTION SPEEDOMETER CONNECTOR

Firmly push down tab and hold to unlock connector while pulling it out.

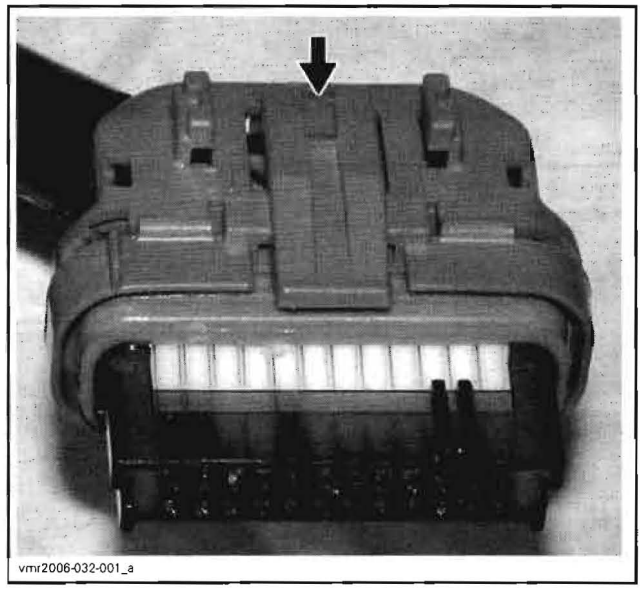

www.midwestmanuals.com
Sales@midwestmanuals.com

www.midwestmanuals.com

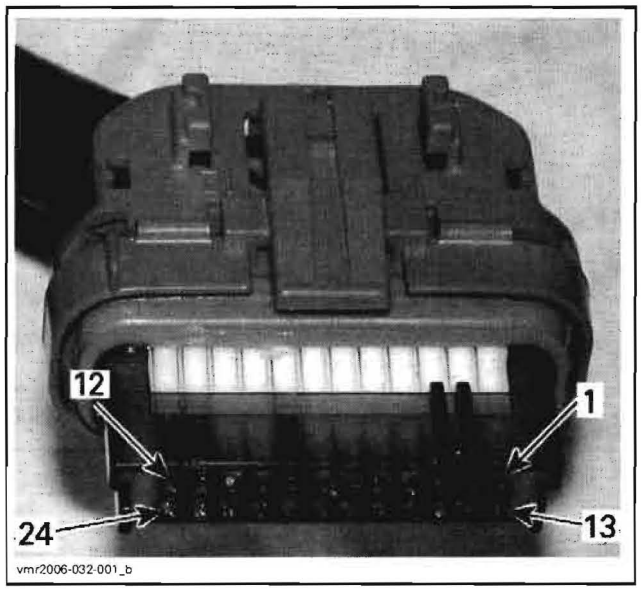

CONNECTOR PINOUT

Push on both tabs to remove retainer.

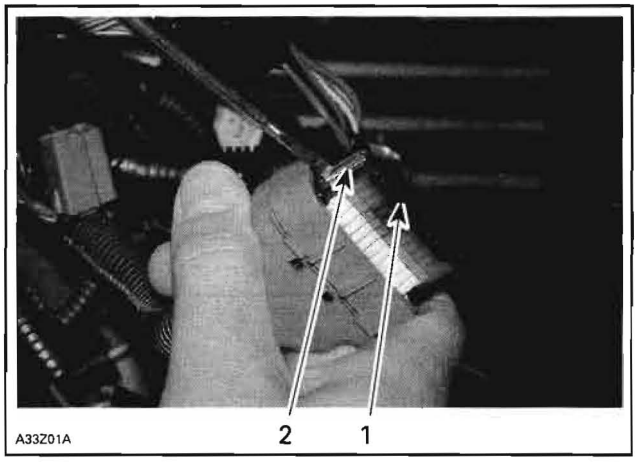

TYPICAL
1. *Retainer*
2. *Tab (one on each side)*

Open housing by lifting 4 tabs.

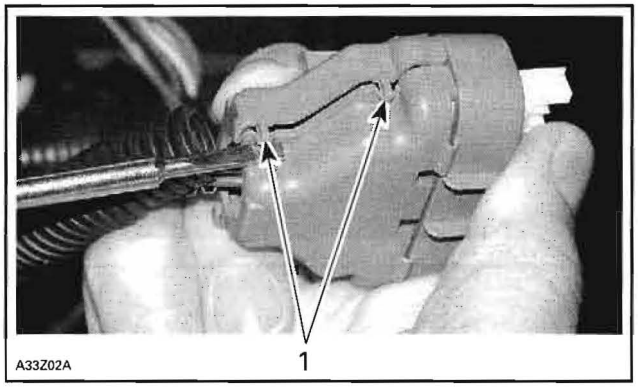

TYPICAL
1. *Tabs (2 on each side)*

Lift the top plastic lock of the female terminal to be removed and hold in position. Lift the female terminal to unlock from the housing and push out of housing.

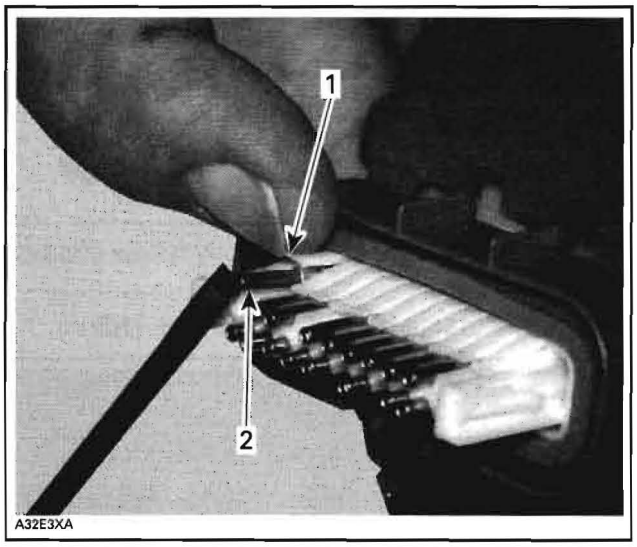

TYPICAL
1. *Lift and hold plastic lock*
2. *Lift to unlock and push out*

BATTERY AND STARTER CABLE TERMINALS

Crimping

Carefully strip the wire approximately to 10 mm (3/8 in) in length, using a wire stripping tool or sharp blade/knife.

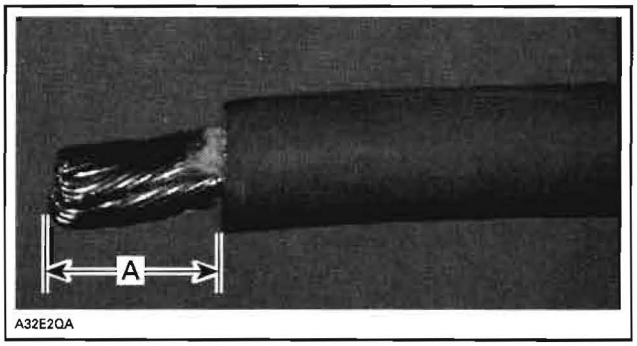

A. 10 mm (3/8 in)

NOTE: Make sure not to cut wire strands while stripping the wire.

Install the appropriate terminal on the wire according to the requirement. Refer to appropriate *PARTS CATALOG*.

www.midwestmanuals.com
Sales@midwestmanuals.com

www.midwestmanuals.com

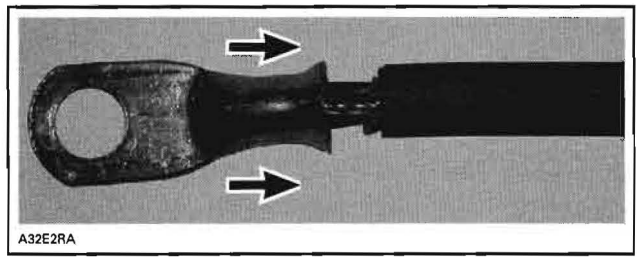
A32E2RA

INSTALLATION OF TERMINAL

Follow the instructions provided with the crimping pliers (P/N 529 035 730) to select the proper position of the tool.

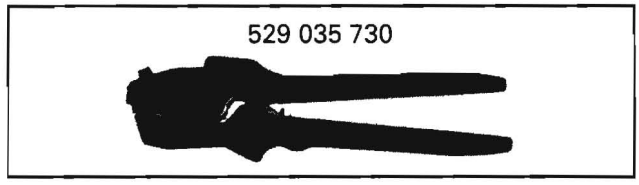

NOTE: Different wires require different crimping pliers settings, so make sure to follow the instruction supplied with the tool.

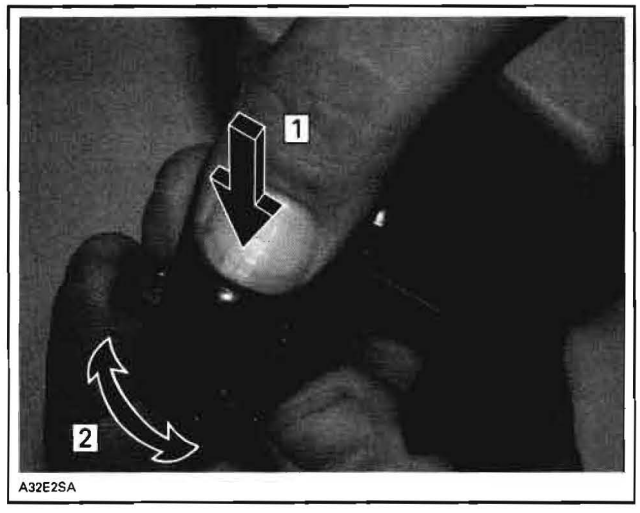

A32E2SA

POSITIONING THE CRIMPING PLIERS
Step 1: Press
Step 2: Rotate

After positioning the crimping pliers, crimp the terminal already installed on wire.

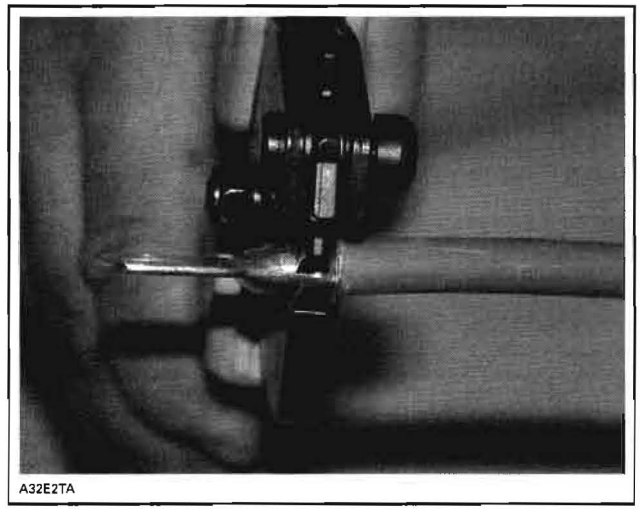
A32E2TA

CRIMPING OF WIRE

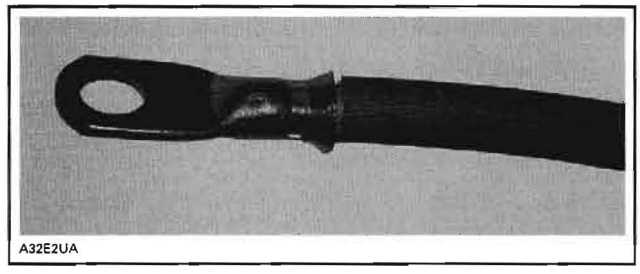
A32E2UA

PROPERLY CRIMPED WIRE

To verify, if the wire is properly crimped, apply some pulling force on wire and the terminal at the same time from both directions.

CAUTION: Never weld the wire to the terminal. Welding can change the property of the wire and it can become brittle and break.

Install the protective heat shrink rubber tube on the terminal. Heat the heat shrink rubber tube using the heat gun so that it grasps the wire and the terminal.

CAUTION: Make sure that the protective heat shrink rubber tube has been properly installed and no part of wire is exposed.

www.midwestmanuals.com
Sales@midwestmanuals.com



sales@midwestmanuals.com
www.midwestmanuals.com

www.midwestmanuals.com

WIRING DIAGRAMS

WIRING CONNECTORS CODING

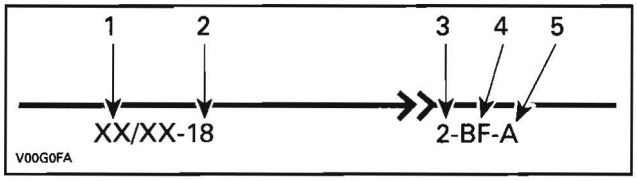

1. *Wire colors*
2. *Wire gauge*
3. *Connector housing area*
4. *Connector identification*
5. *Wire location in connector*

Wire Colors

It identifies the color of a wire. When a 2-color scheme is used, the first color is the main color while the second color is the tracer color.

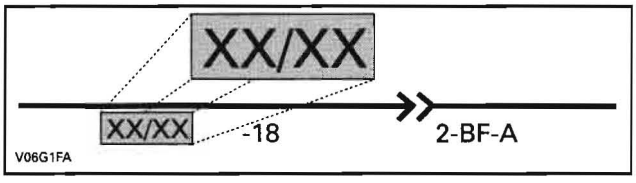

THE SHADED PART INDICATES THE WIRE COLOR

Example: YL/BK is a YELLOW wire with a BLACK stripe.

Wire Gauge

The number after wire color indicates the gauge of a wire.

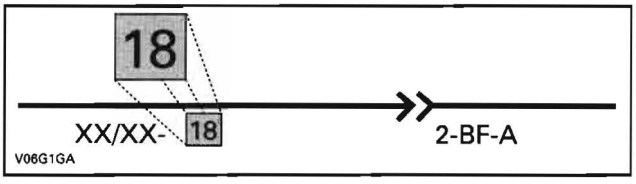

THE SHADED PART INDICATES THE WIRE GAUGE

Example: YL/BK is a YELLOW wire with a BLACK stripe.

Connector Housing Area

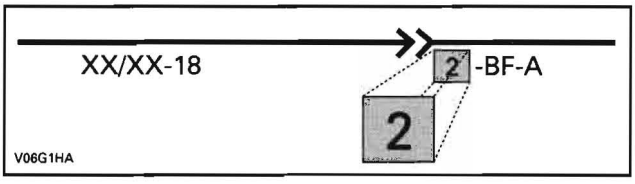

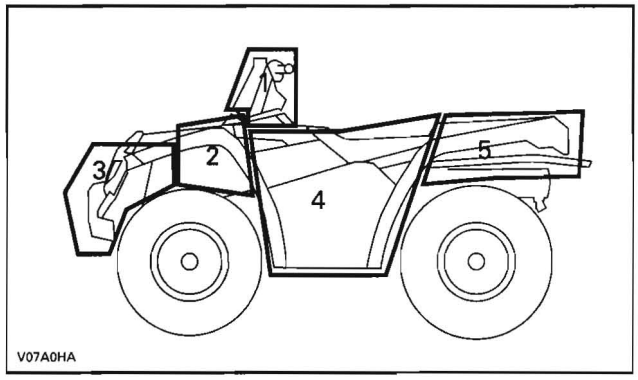

AREA	LOCATION
1	Steering area
2	Service compartment
3	Front of vehicle
4	Engine area
5	Rear of vehicle

Connector Identification

Indicates the connector's function. If there are many connectors in the same area, this helps to identify which wire is in which connector.

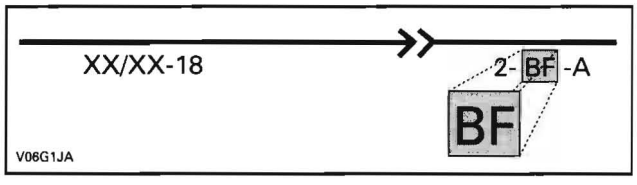

THE SHADED PART INDICATES A CONNECTOR

www.midwestmanuals.com
Sales@midwestmanuals.com

www.midwestmanuals.com

ABBREVIATION	DESCRIPTION
BA	Ignition coil
BAT	Battery
BD	2WD/4WD switch
CA	Magneto
CAPS	Camshaft position sensor
CC	Ignition switch
CI	Multifunction speedometer
CPS	Crankshaft position sensor
CTS	Coolant temperature sensor
CV	Speed sensor
DB	Diagnostic connector
DC	DC outlet
ECM	Engine control module
FP	Fuel pump
FRA	Brake light switch
FT	Cooling fan
HIC	Harness interconnector (engine/vehicle)
IDLE	Idle bypass valve
INJ1 and INJ2	Fuel injector
MAPTS	Manifold air pressure and temperature sensor
MD	2WD/4WD actuator
MG	multifunction switch
OPS	Oil pressure switch
PD	RH headlight
PF1	Fuse Holder (main)
PF2	Fuse Holder (near battery)
PG	LH headlight
PRN	Subtransmission switch
RD	Voltage regulator/rectifier
SD	2WD/4WD actuator switch
SM	Starter motor
SPK1 and SPK2	Spark plug
SS	Starter solenoid
SW	Winch relay
SWW	Winch switch
TPS	Throttle position sensor
WM	Winch motor

Wire Location in Connector

This is the wire position in the connector. The number or letter given refers to the physical identification stamped on the connector.

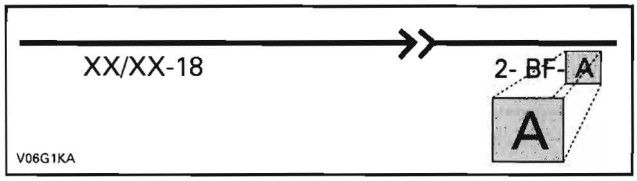

THE SHADED PART INDICATES THE CONNECTOR LOCATION IN HOUSING

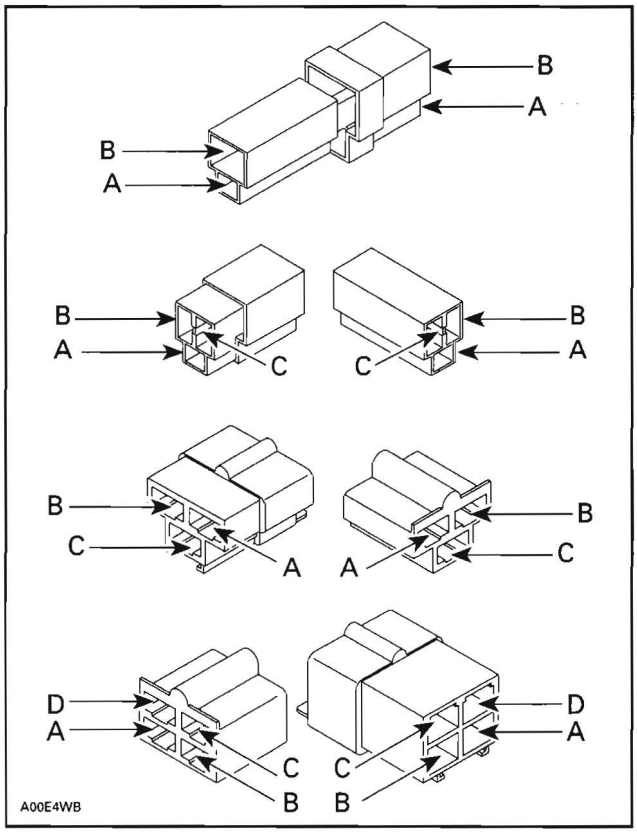

TYPICAL

www.midwestmanuals.com
Sales@midwestmanuals.com

www.midwestmanuals.com

2008 RENEGADE 800

DISTRIBUTION SYSTEM

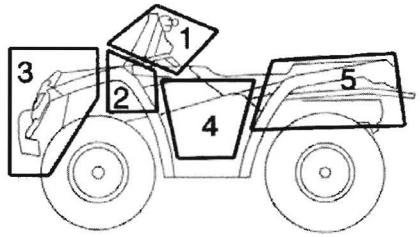

ZONE #	ZONE DESCRIPTION
1	STEERING AREA
2	MODULE AREA
3	FRONT OF VEHICLE
4	ENGINE AREA
5	REAR OF VEHICLE

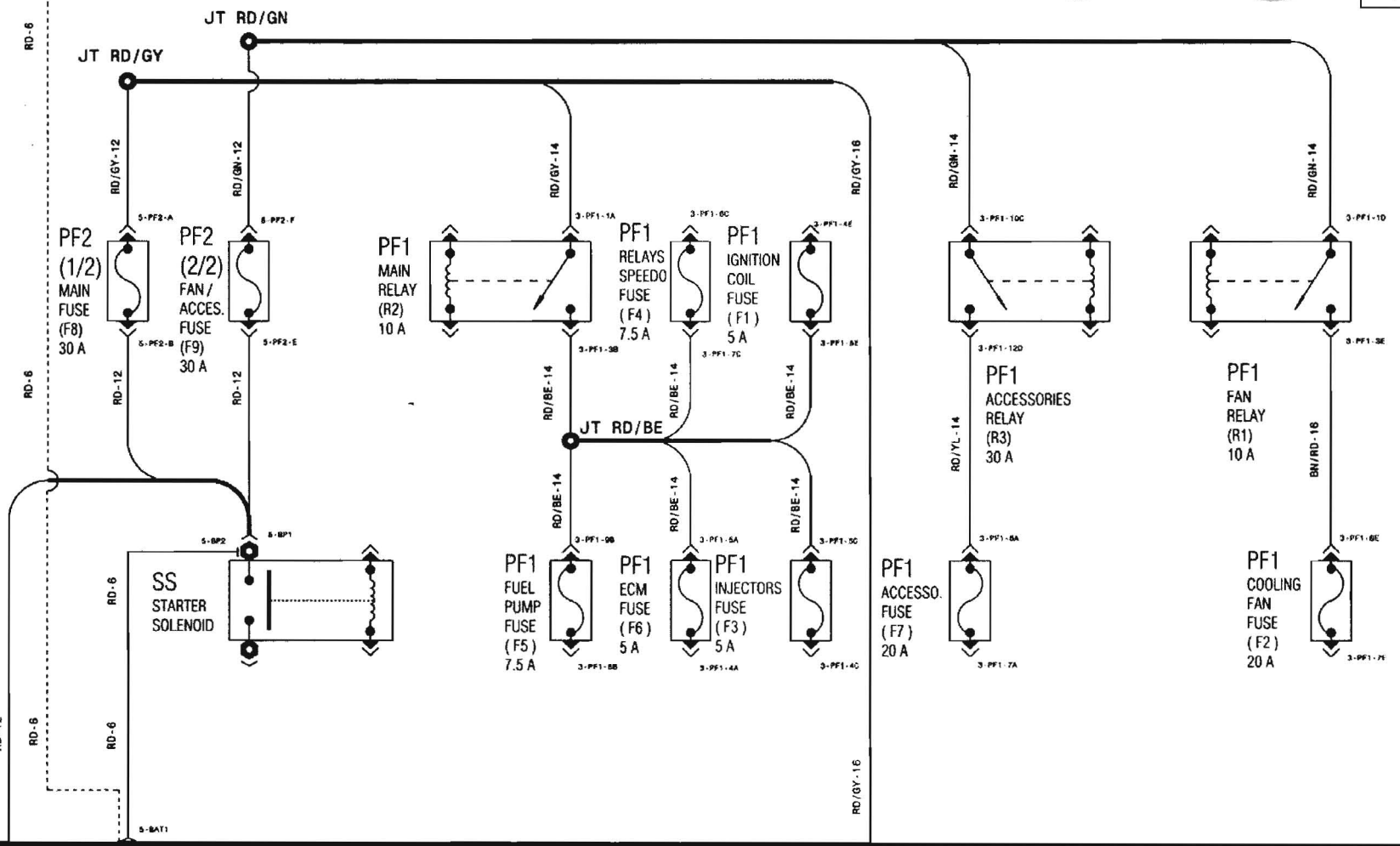

www.midwestmanuals.com

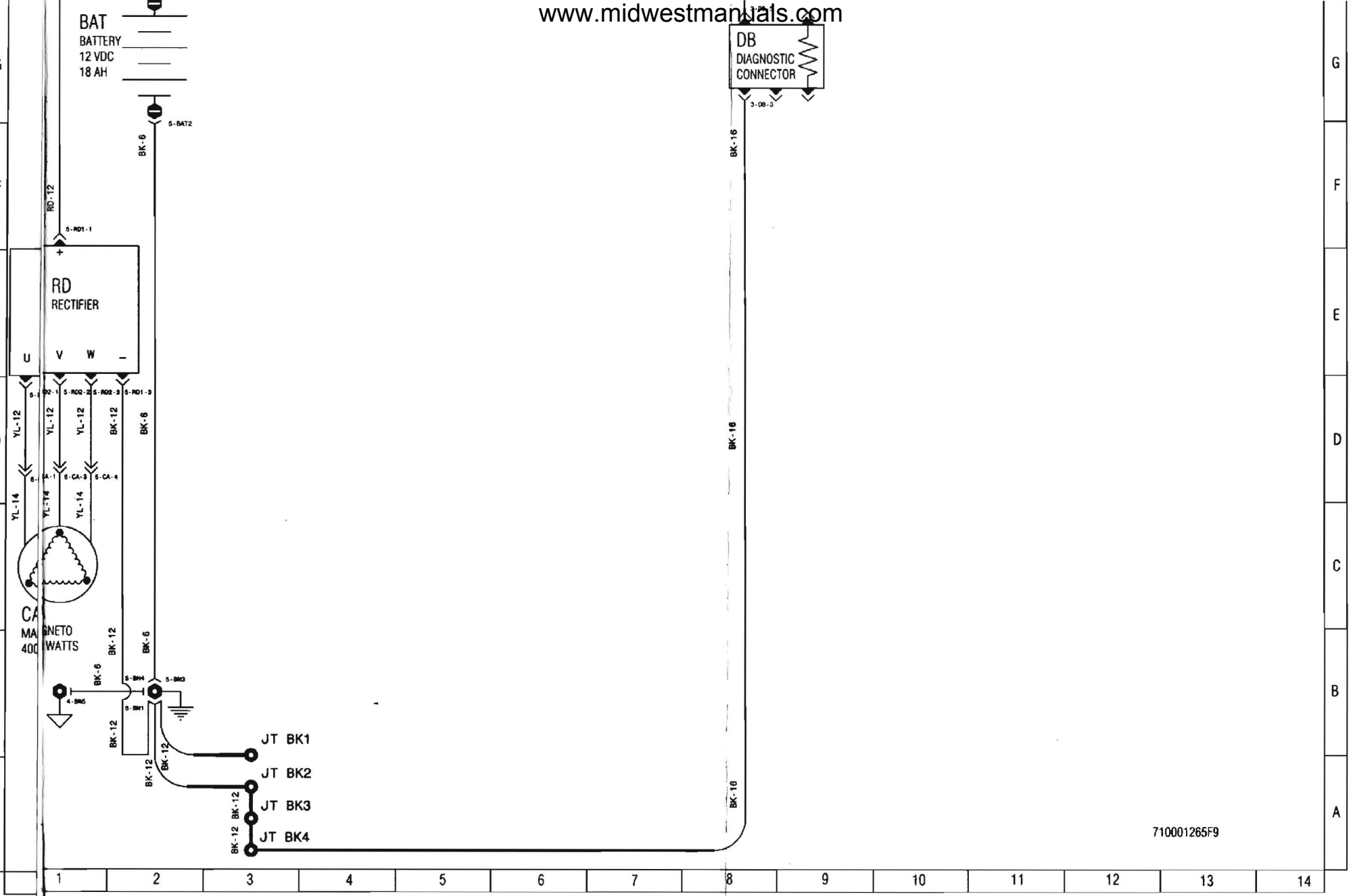

www.midwestmanuals.com

2008 RENEGADE 800

INJECTION/IGNITION SYSTEM

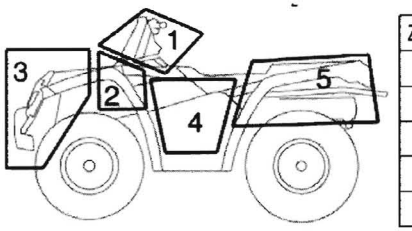

ZONE #	ZONE DESCRIPTION
1	STEERING AREA
2	MODULE AREA
3	FRONT OF VEHICLE
4	ENGINE AREA
5	REAR OF VEHICLE

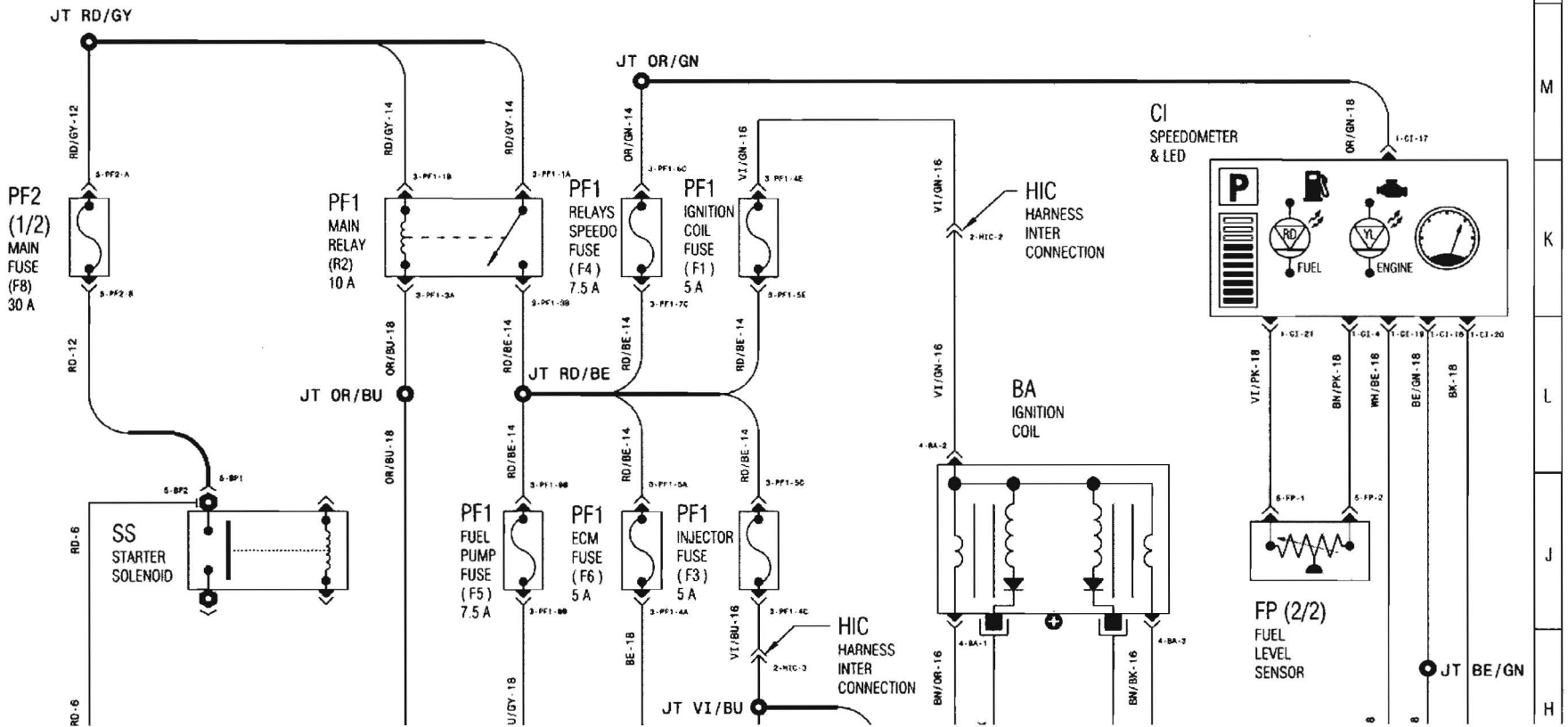

www.midwestmanuals.com

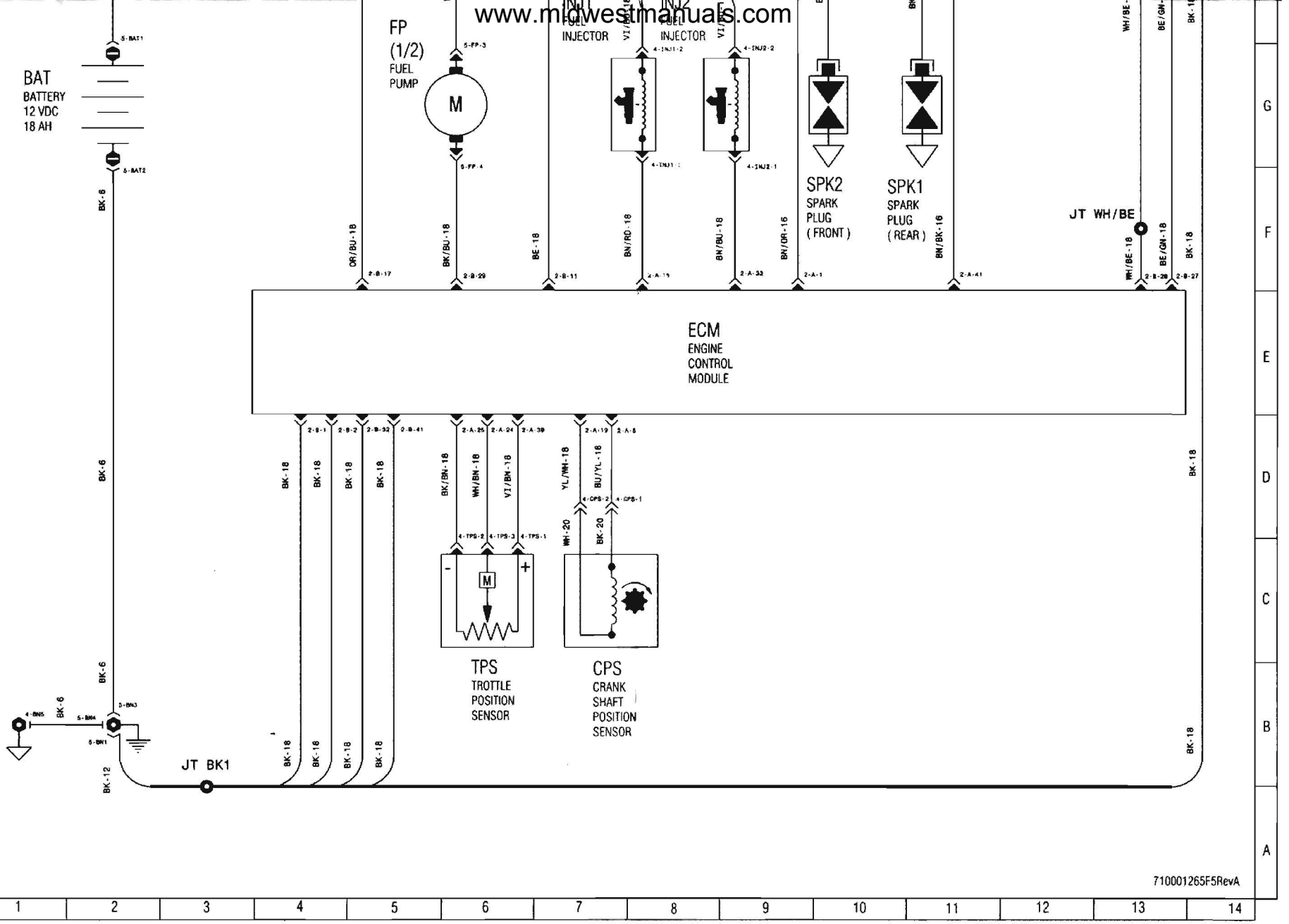

www.midwestmanuals.com

2008 RENEGADE 800
COOLING SYSTEM

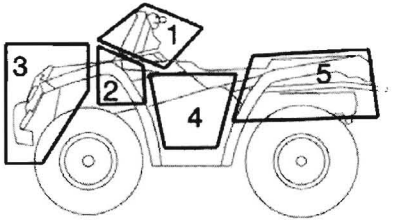

ZONE #	ZONE DESCRIPTION
1	STEERING AREA
2	MODULE AREA
3	FRONT OF VEHICLE
4	ENGINE AREA
5	REAR OF VEHICLE

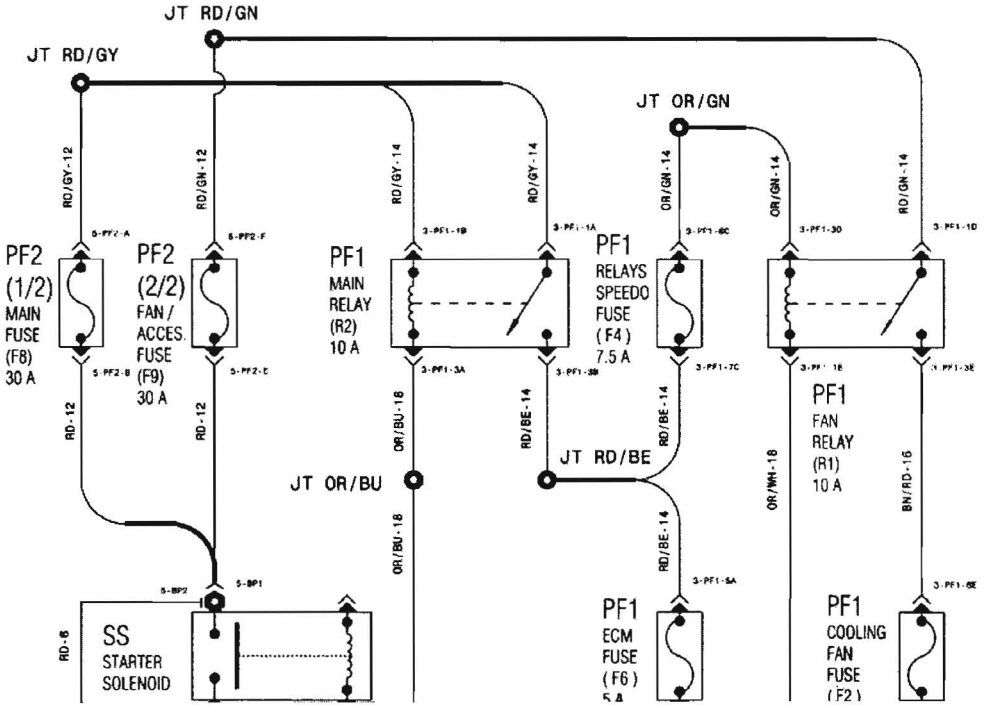

www.midwestmanuals.com

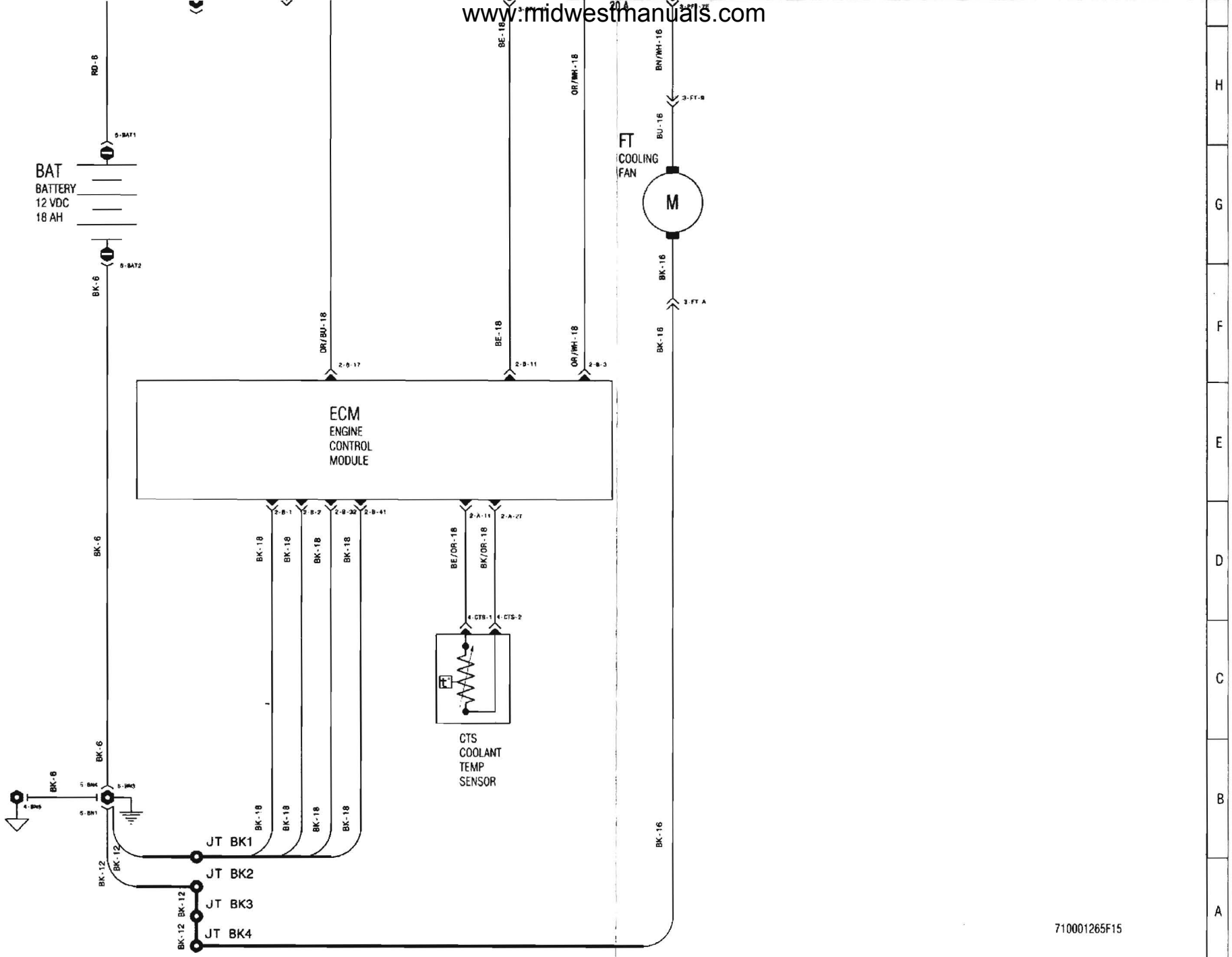

/mr2008-076-008

www.midwestmanuals.com

2008 RENEGADE 800

STARTING SYSTEM

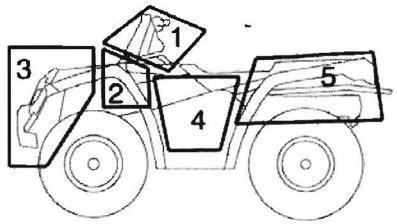

ZONE #	ZONE DESCRIPTION
1	STEERING AREA
2	MODULE AREA
3	FRONT OF VEHICLE
4	ENGINE AREA
5	REAR OF VEHICLE

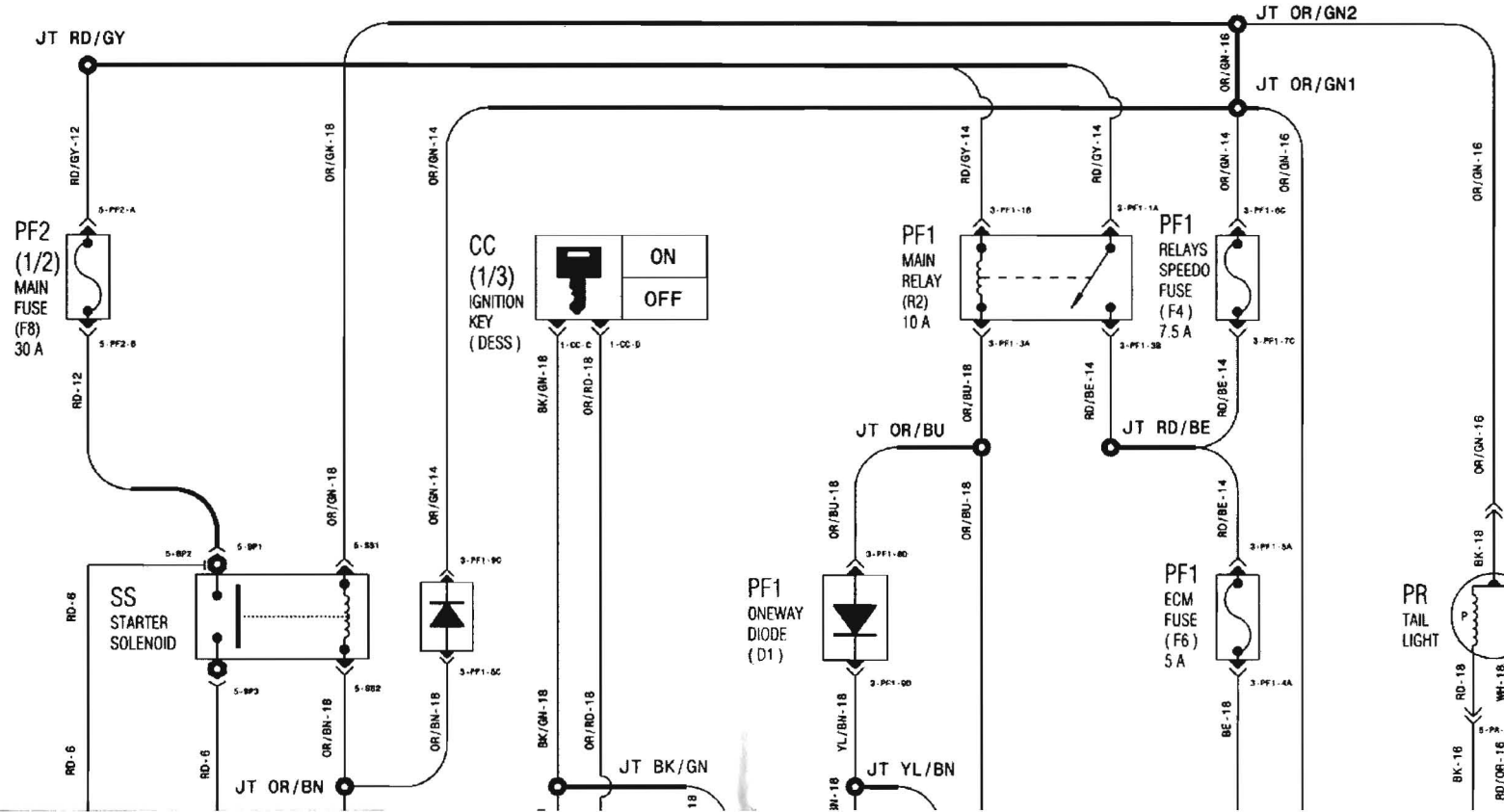

www.midwestmanuals.com

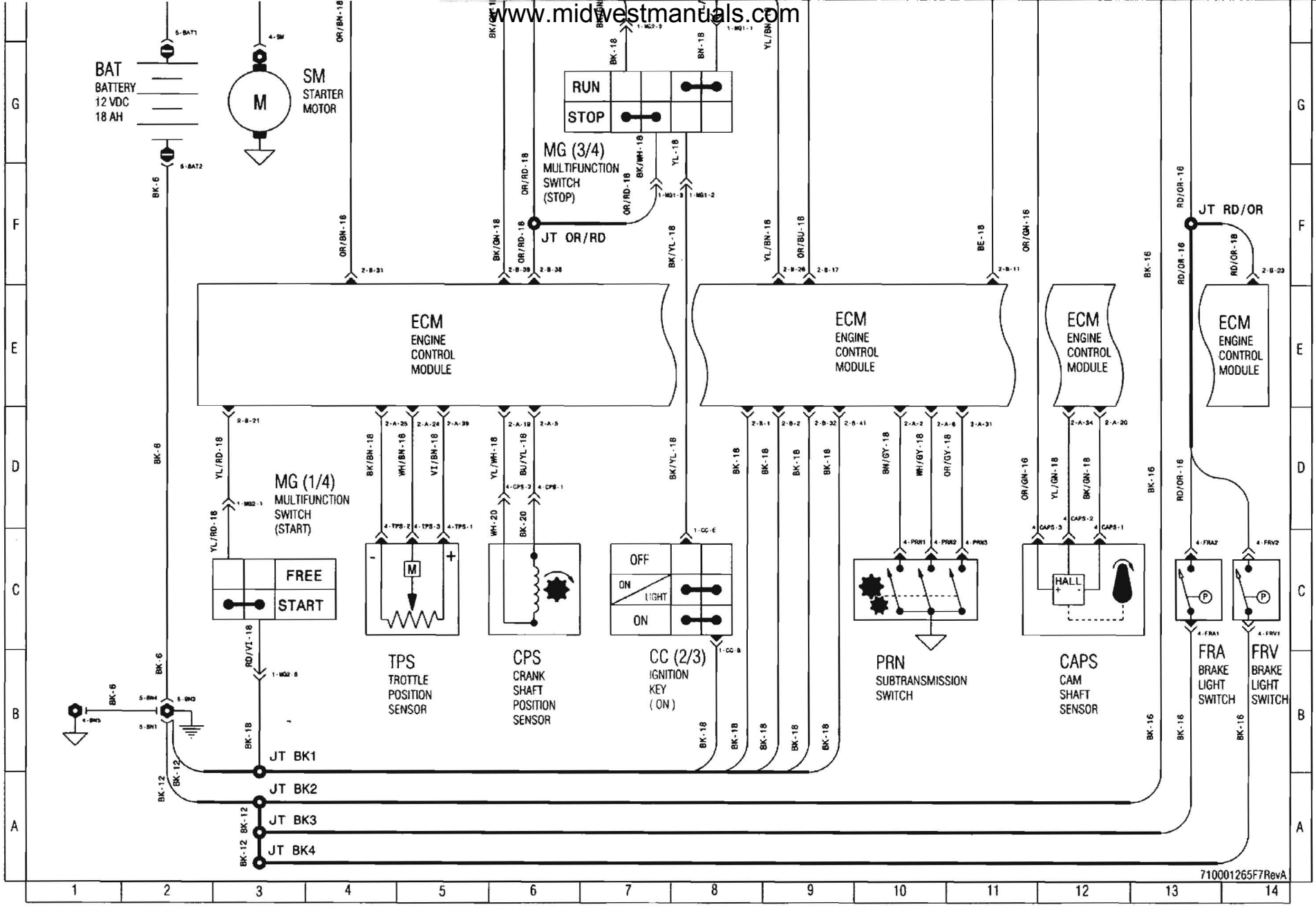

www.midwestmanuals.com

2008 RENEGADE 800

CHARGING SYSTEM

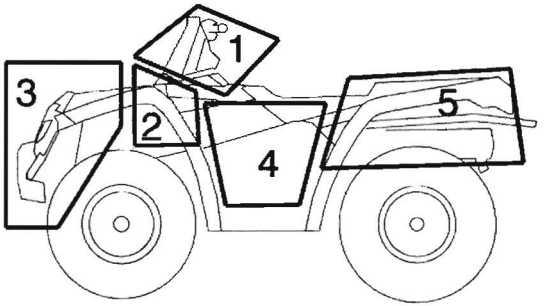

ZONE #	ZONE DESCRIPTION
1	STEERING AREA
2	MODULE AREA
3	FRONT OF VEHICLE
4	ENGINE AREA
5	REAR OF VEHICLE

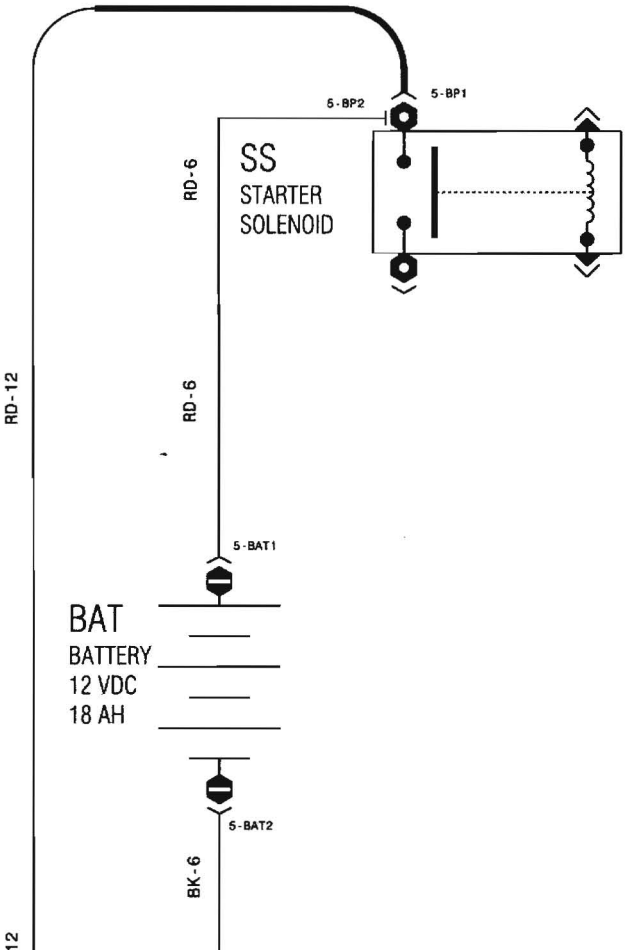

www.midwestmanuals.com

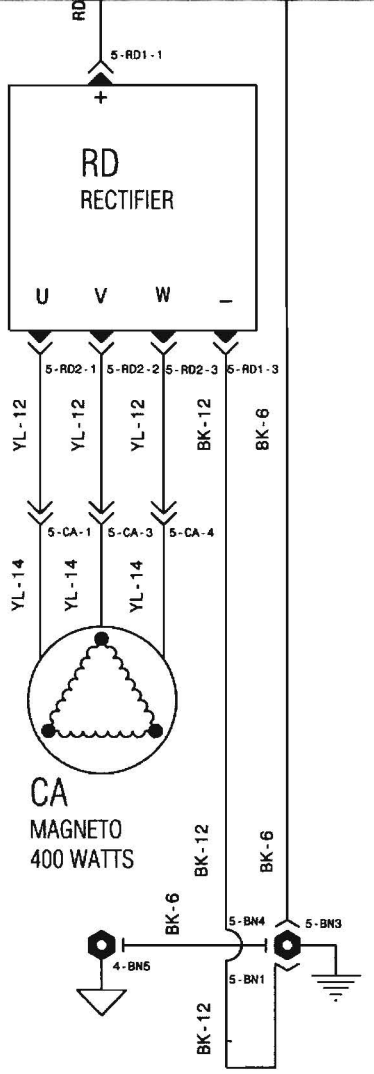

710001265F3

www.midwestmanuals.com

2008 RENEGADE 800

ACCESSORIES SYSTEM

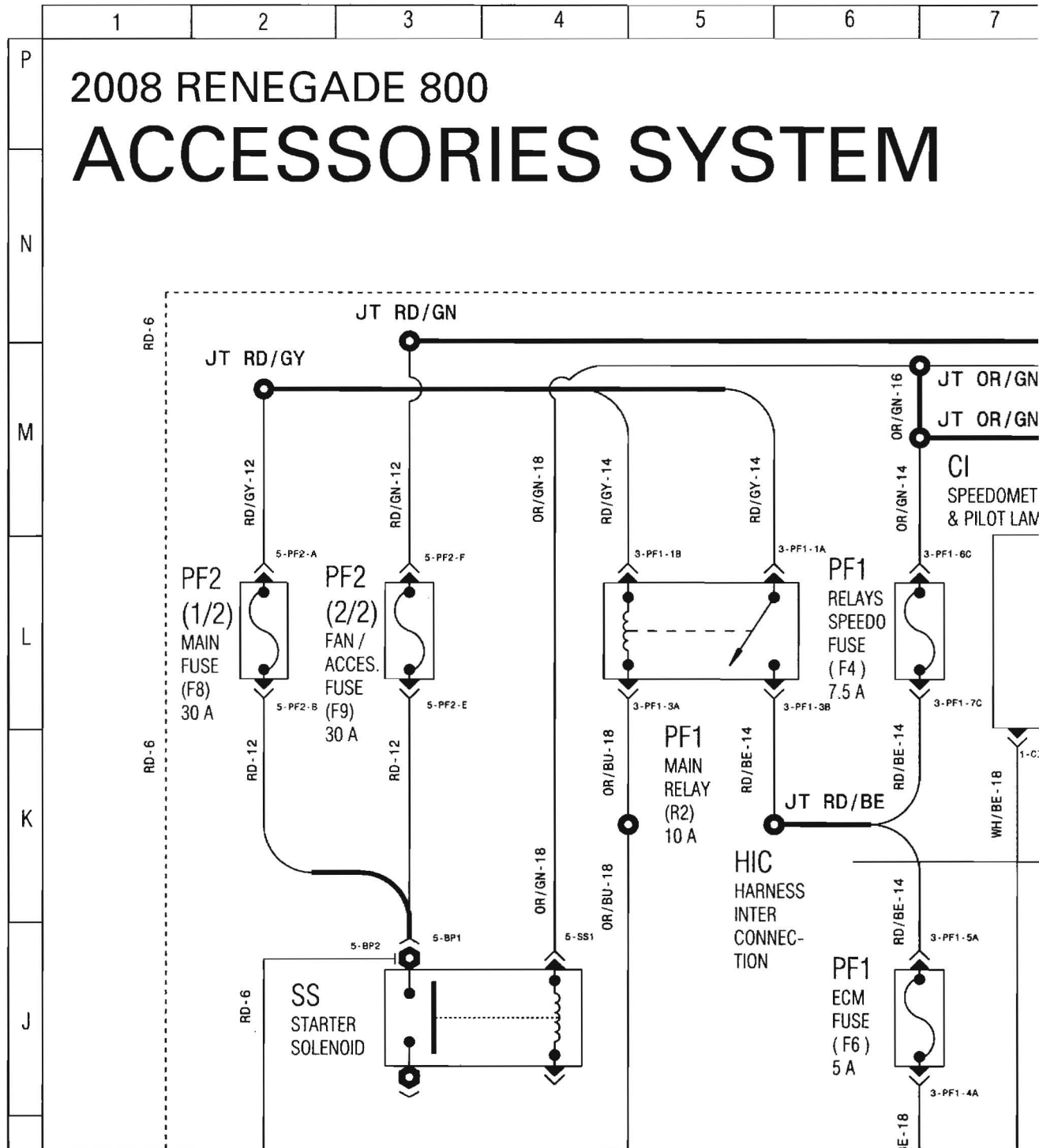

www.midwestmanuals.com

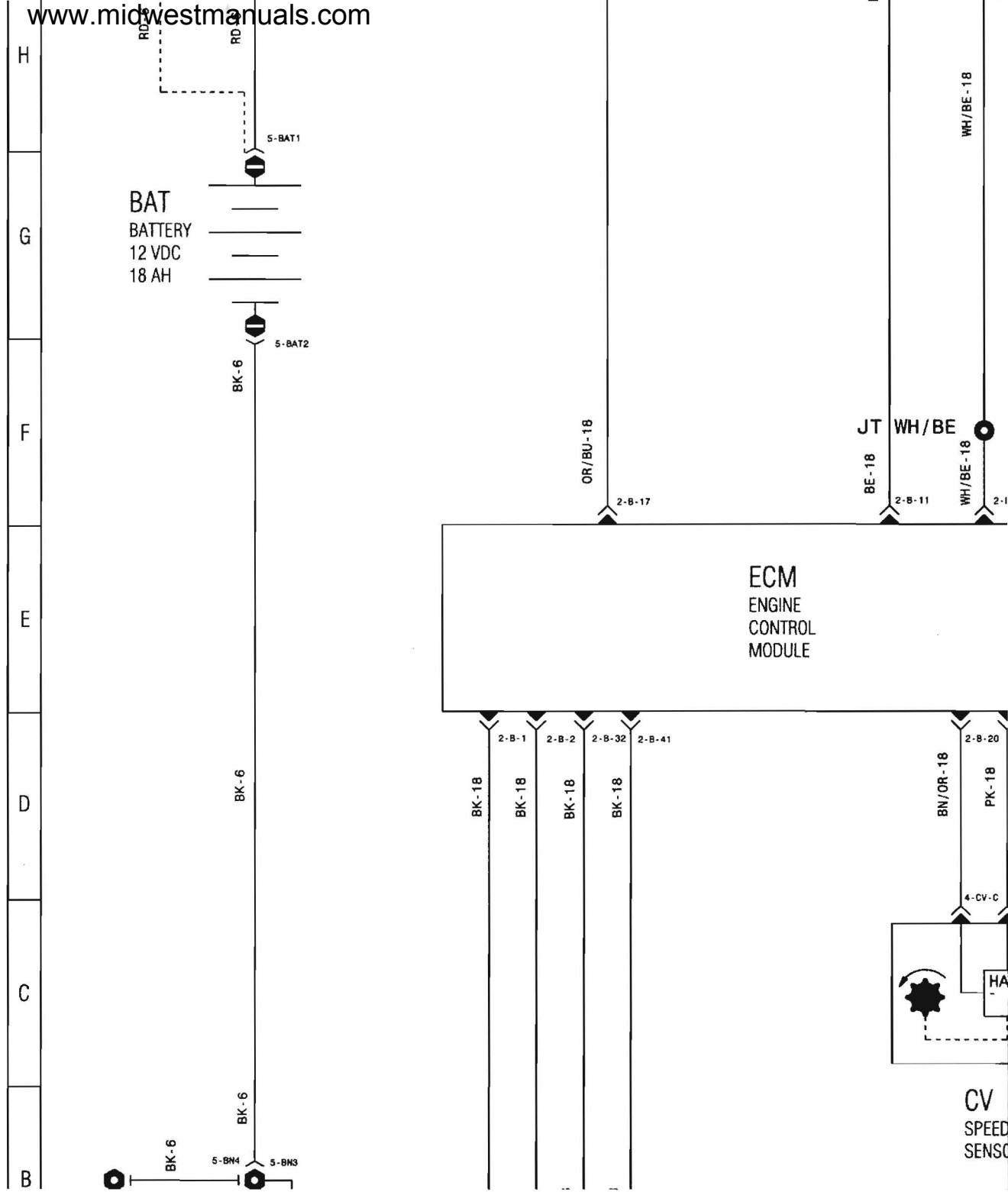

www.midwestmanuals.com

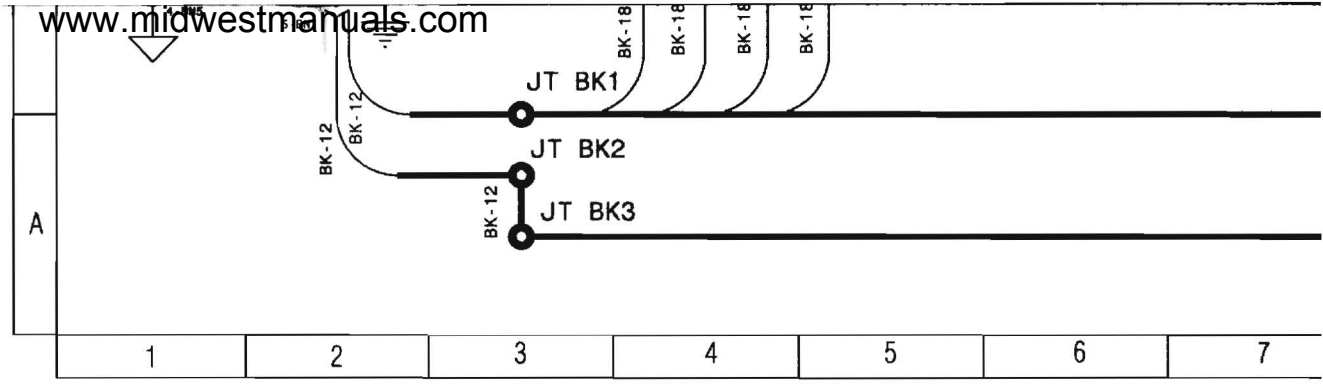

www.midwestmanuals.com

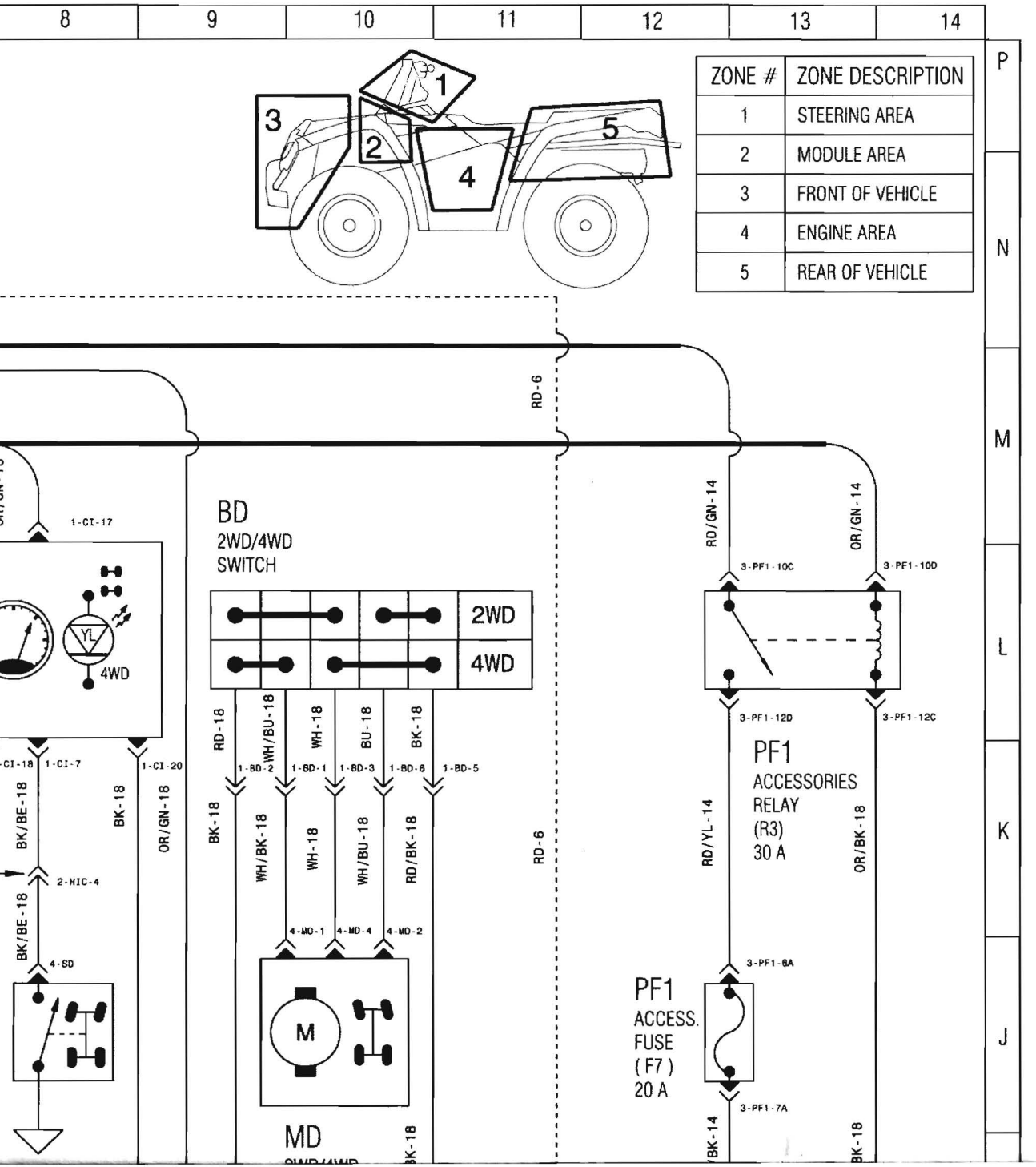

www.midwestmanuals.com

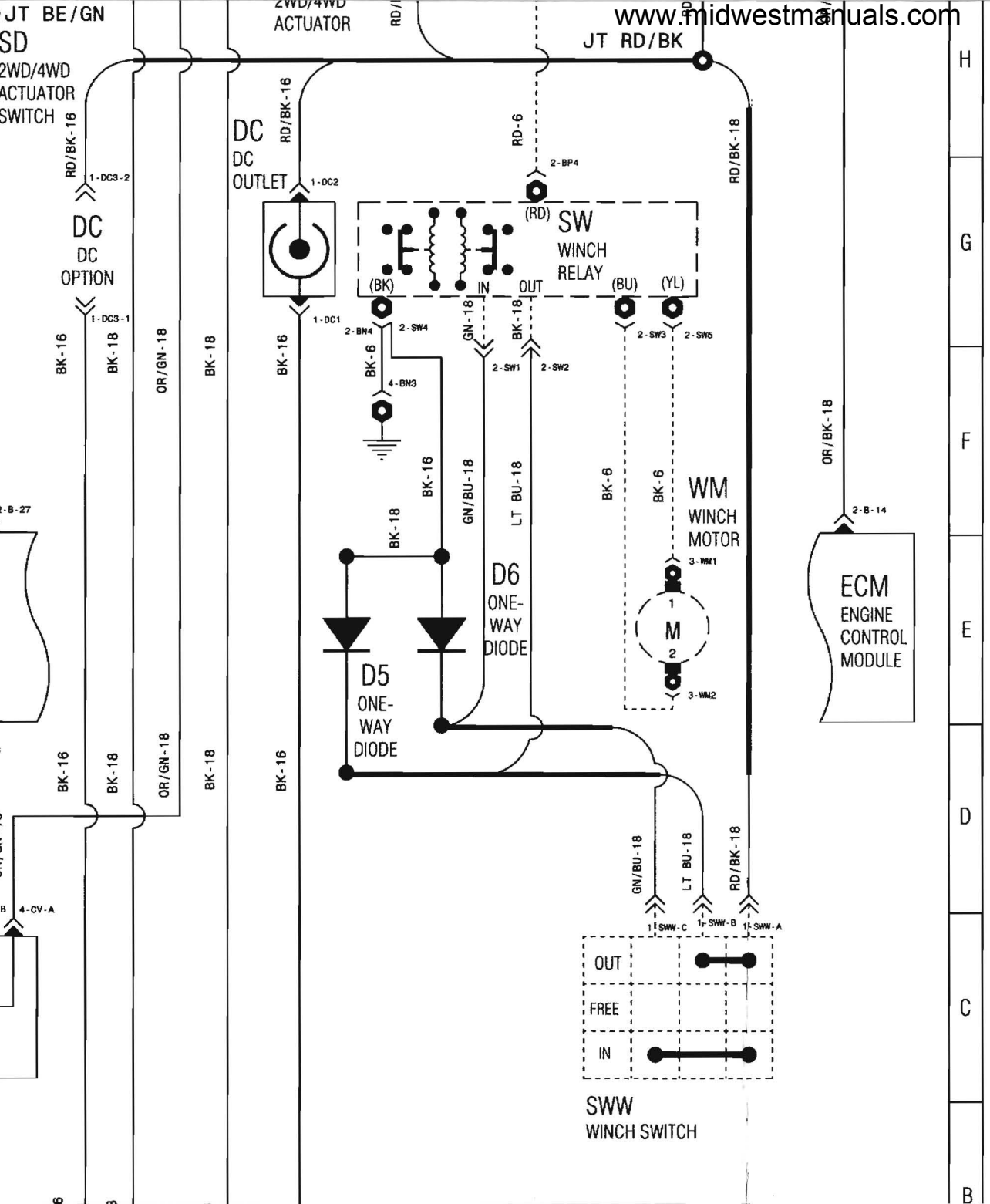

www.midwestmanuals.com

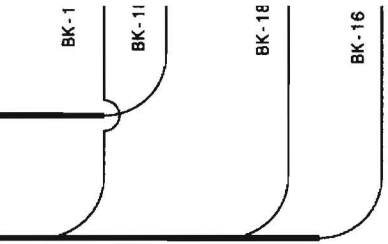

A

710001265F11REVA

8 9 10 11 12 13 14

www.midwestmanuals.com

2008 RENEGADE 800

GENERAL SYSTEM

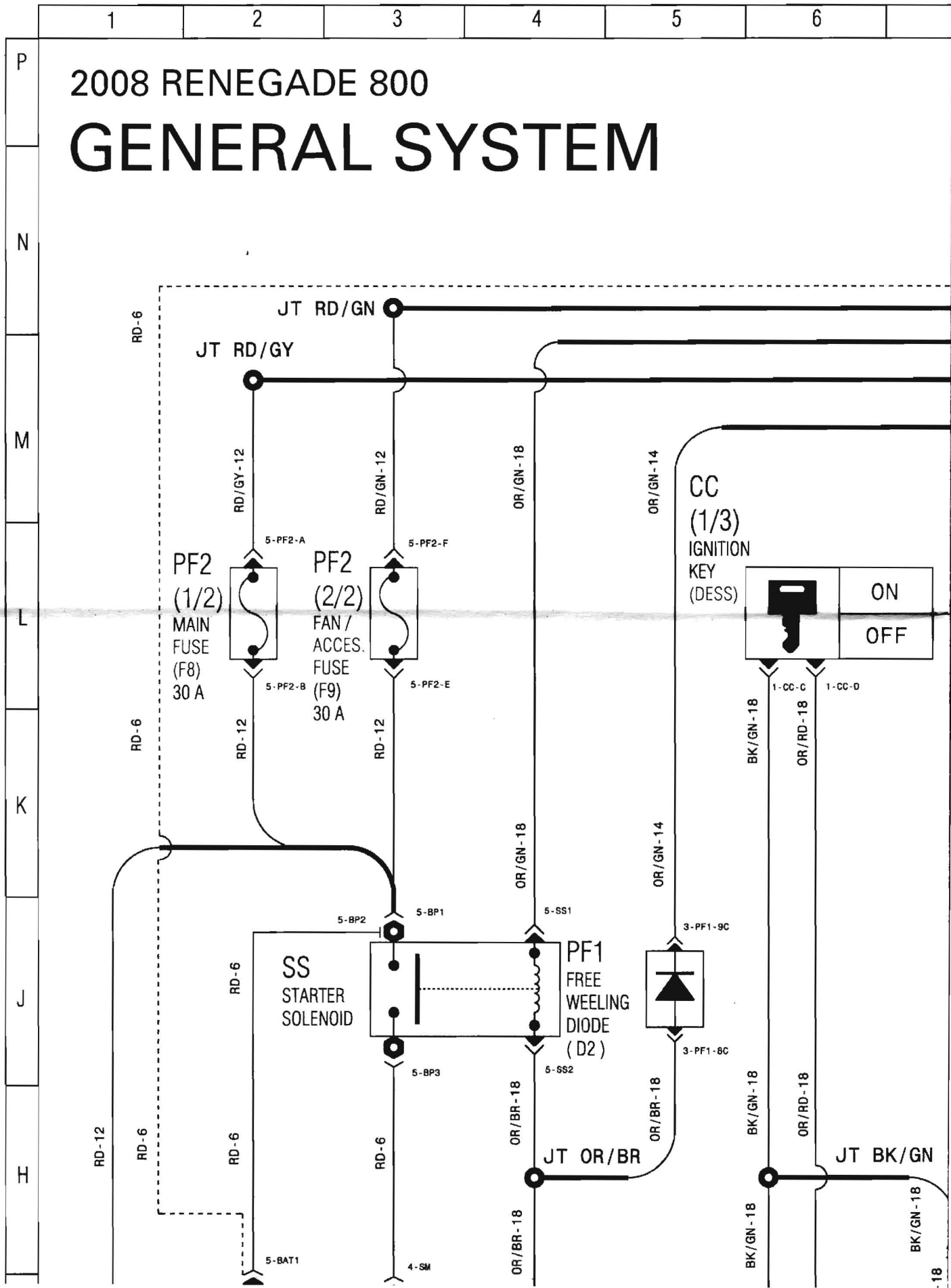

www.midwestmanuals.com

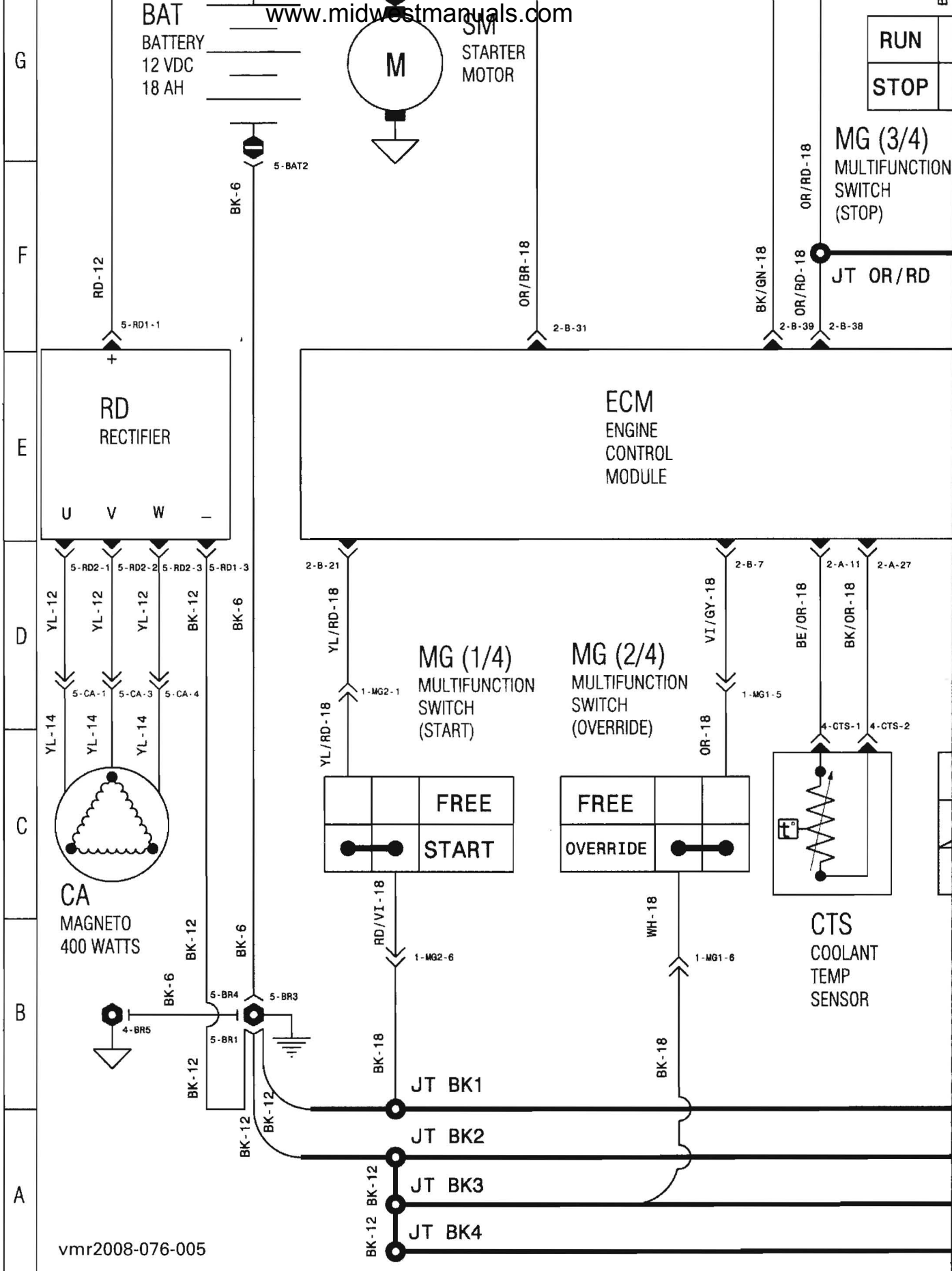

www.midwestmanuals.com

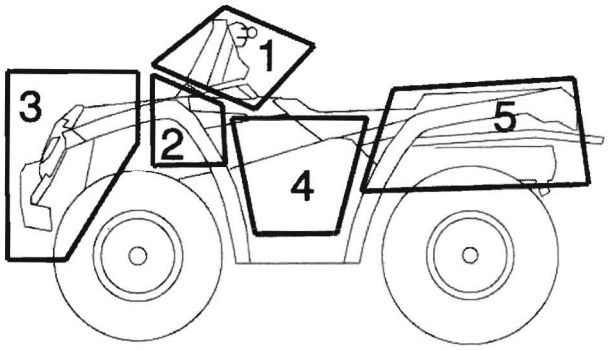

JT OR/GN2

OR/VE-16

JT OR/GN1

RD/GY-14

RD/GY-14

OR/GN-14

VI/GN-16

3-PF1-1B

3-PF1-1A

3-PF1-6C

3-PF1-4E

PF1
MAIN
RELAY
(R2)
10 A

PF1
RELAYS
SPEEDO
FUSE
(F4)
7.5 A

PF1
IGNITION
COIL
FUSE
(F1)
5 A

VI/GN-16

2-HIC-2

HIC
HAR
INTE
CON

3-PF1-3A

3-PF1-3B

3-PF1-7C

3-PF1-5E

OR/BU-18

RD/BE-14

RD/BE-14

RD/BE-14

VI/GN-16

JT OR/BU

JT RD/BE

BA
IGNI
COIL

4-BA-2

OR/BU-18

OR/BU-18

RD/BE-14

RD/BE-14

RD/BE-14

3-PF1-8D

3-PF1-9B

3-PF1-5A

3-PF1-5C

PF1
ONEWAY
DIODE
(D1)

PF1
FUEL
PUMP
FUSE
(F5)
7.5 A

PF1
ECM
FUSE
(F6)
5 A

PF1
INJECTORS
FUSE
(F3)
5 A

3-PF1-9D

3-PF1-8B

3-PF1-4A

3-PF1-4C

VI/BU-16

HIC
HARNESS
INTER
CONNECTION

2-HIC-3

4-BA-1

YL/BR-18

BU/GY-18

BE-18

BR/OR-16

JT YL/BR

JT VI/BU

YL/BR-18

INJ1
FUEL
INJECTOR
(FRONT)

INJ2
FUEL
INJECTOR
(REAR)

VI/BU-18

VI/BU-18

BK

1-MG2-3

1-MG1-1

YL/BR-18

FP
(1/2)

5-FP-3

4-INJ2-2

www.midwestmanuals.com

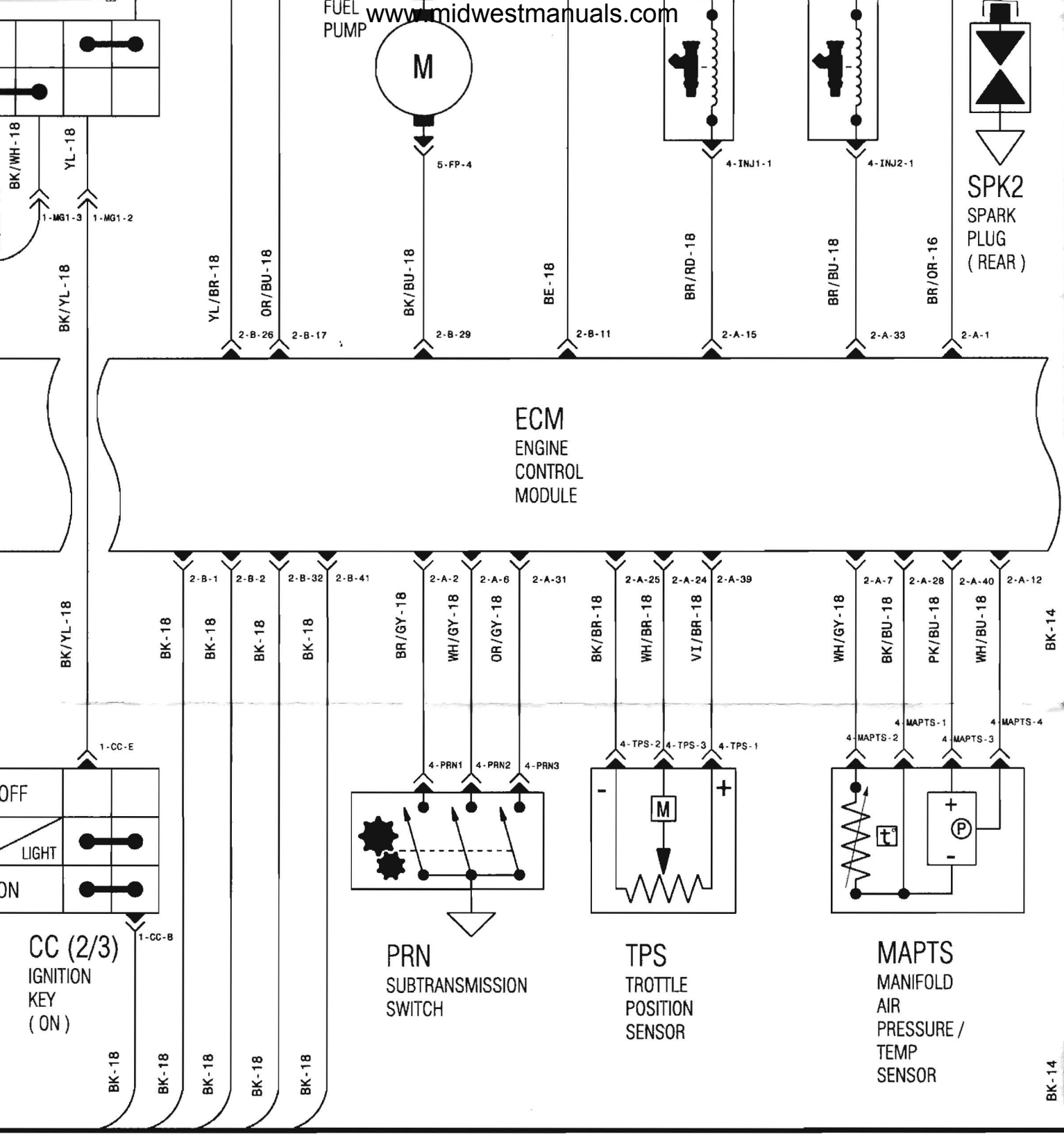

www.midwestmanuals.com

15	16	17	18	19	20	21	2

TERMINAL IDENTIFICATION		
	NAME	ZONE-CONNECTOR NAME-TERMINAL #/A
X:	CI	1 - CI - 15
X:	CV	4 - CV - A
X:	ME	2 - ME

AWG	MAX. CURRENT	MAX. FUSE CURRENT	MAX. WATT
# 6	100 amps	125 amps	1450 watts
# 8	65 amps	80 amps	930 watts
# 10	40 amps	50 amps	580 watts
# 12	25 amps	30 amps	365 watts
# 14	16 amps	20 amps	230 watts
# 16	10 amps	15 amps	145 watts
# 18	6 amps	7.5 amps	85 watts
* AT	50°C MAX		

ZONE
1
2
3
4
5

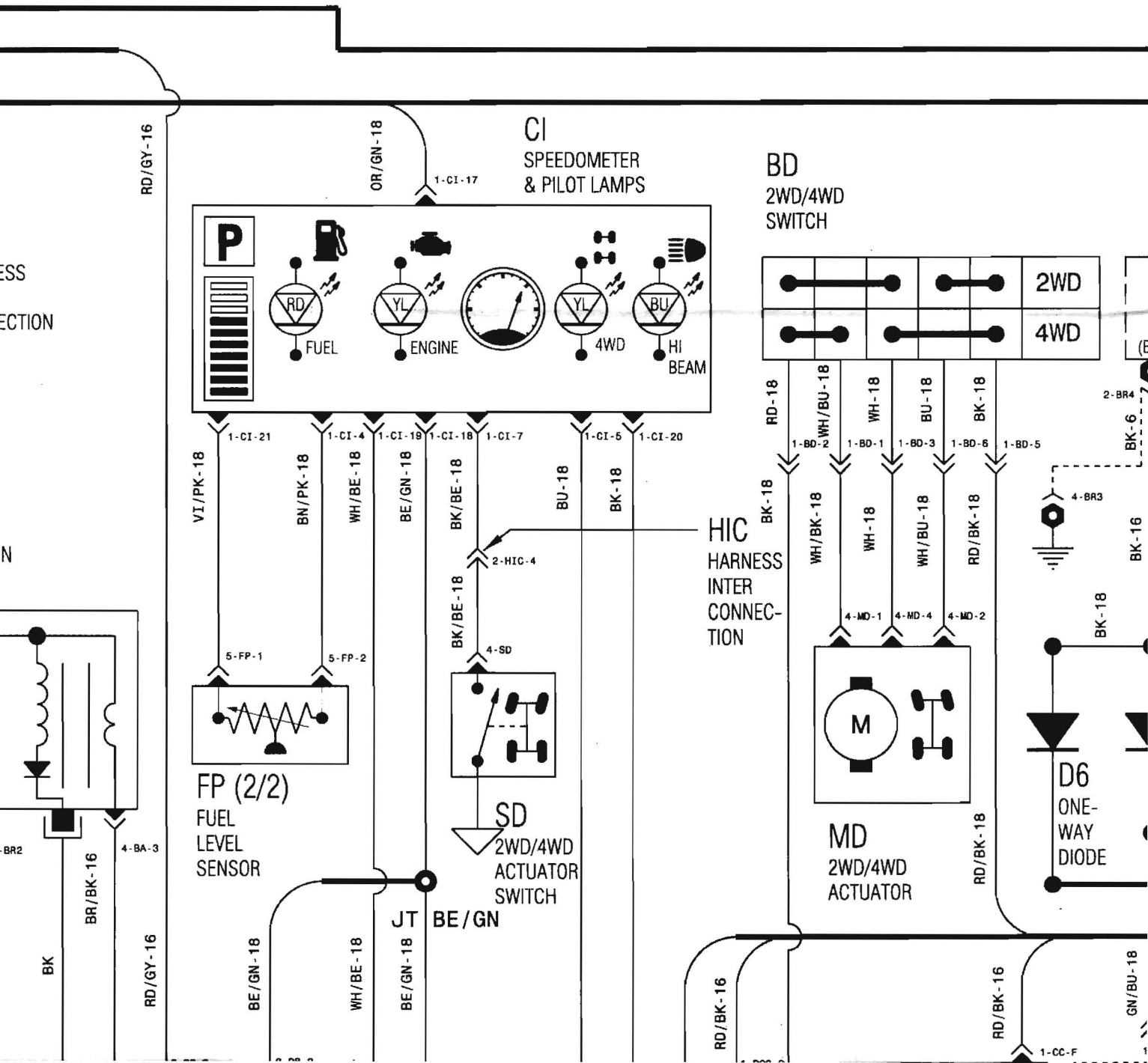

www.midwestmanuals.com

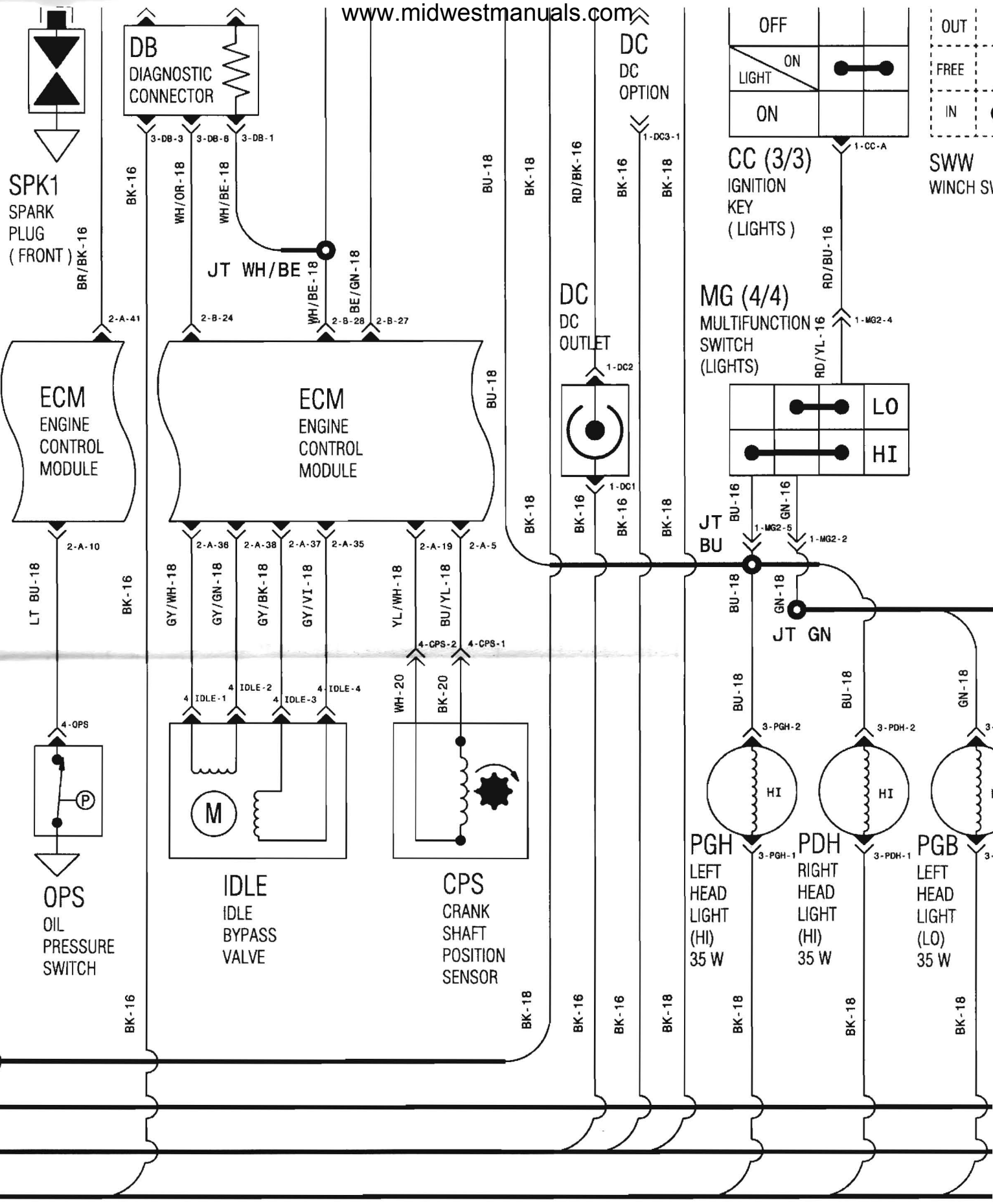

15	16	17	18	19	20	21	2

www.midwestmanuals.com

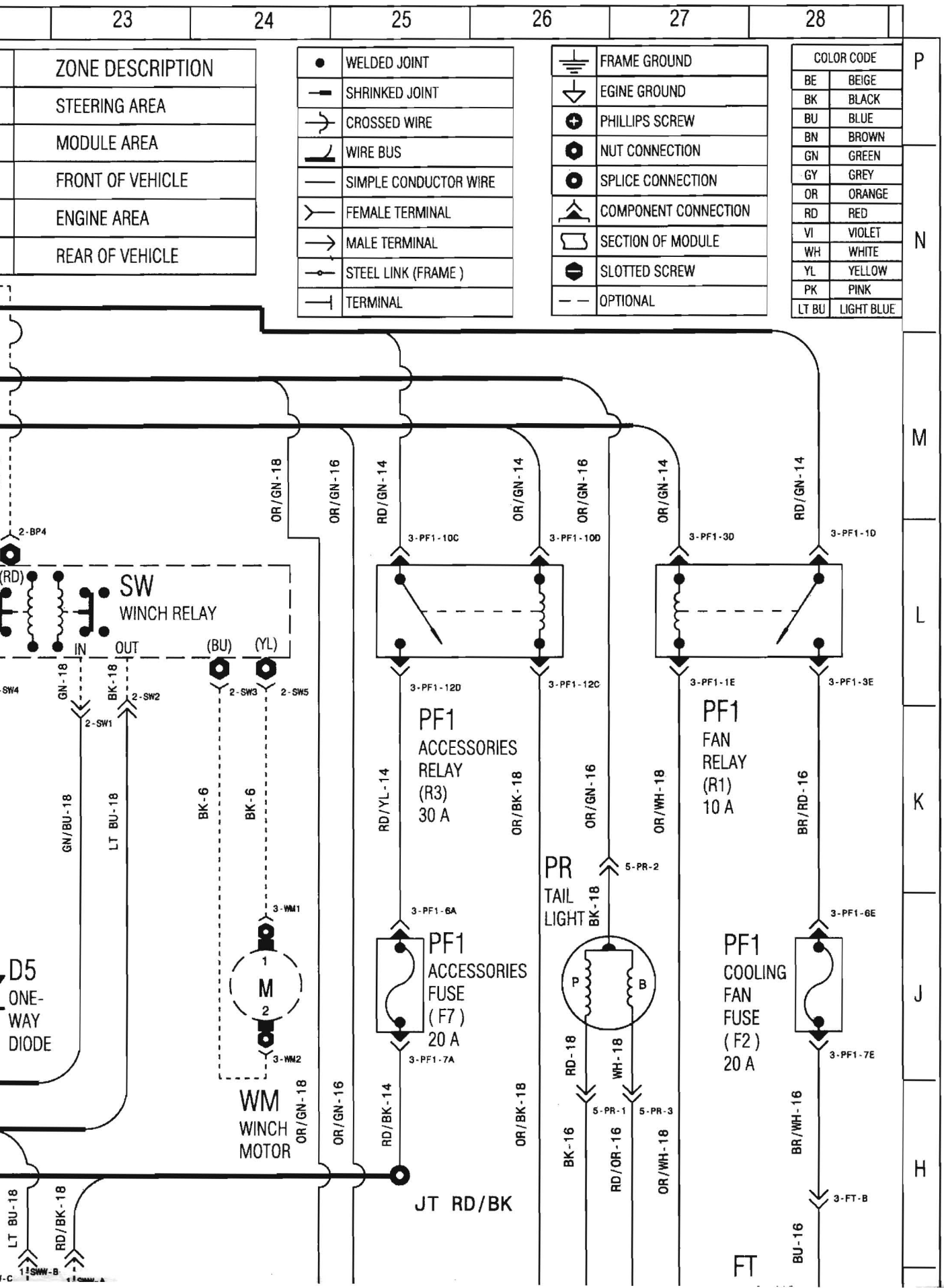

www.midwestmanuals.com

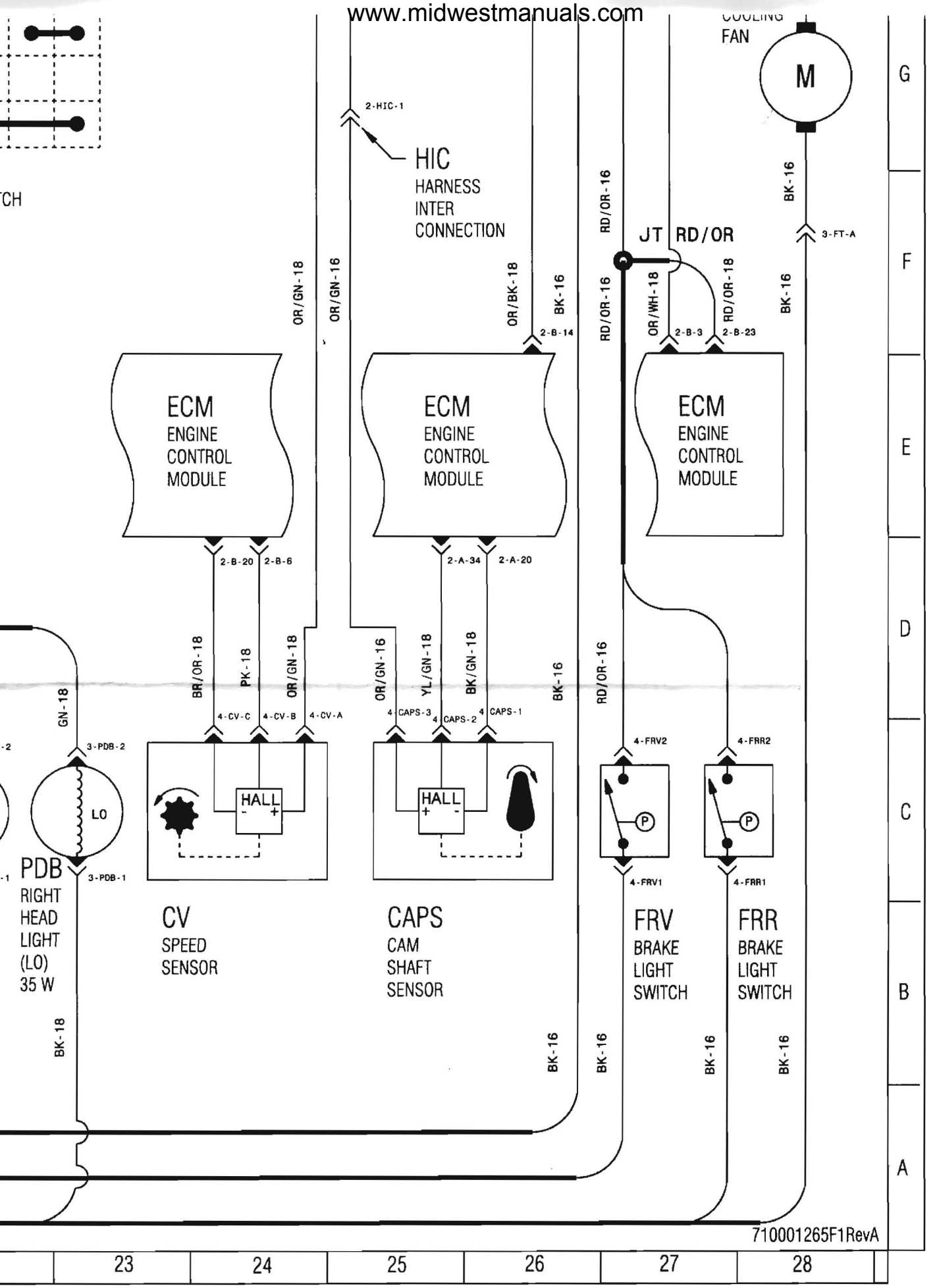

www.midwestmanuals.com

2008 OUTLANDER 800/650/500

GENERAL SYSTEM

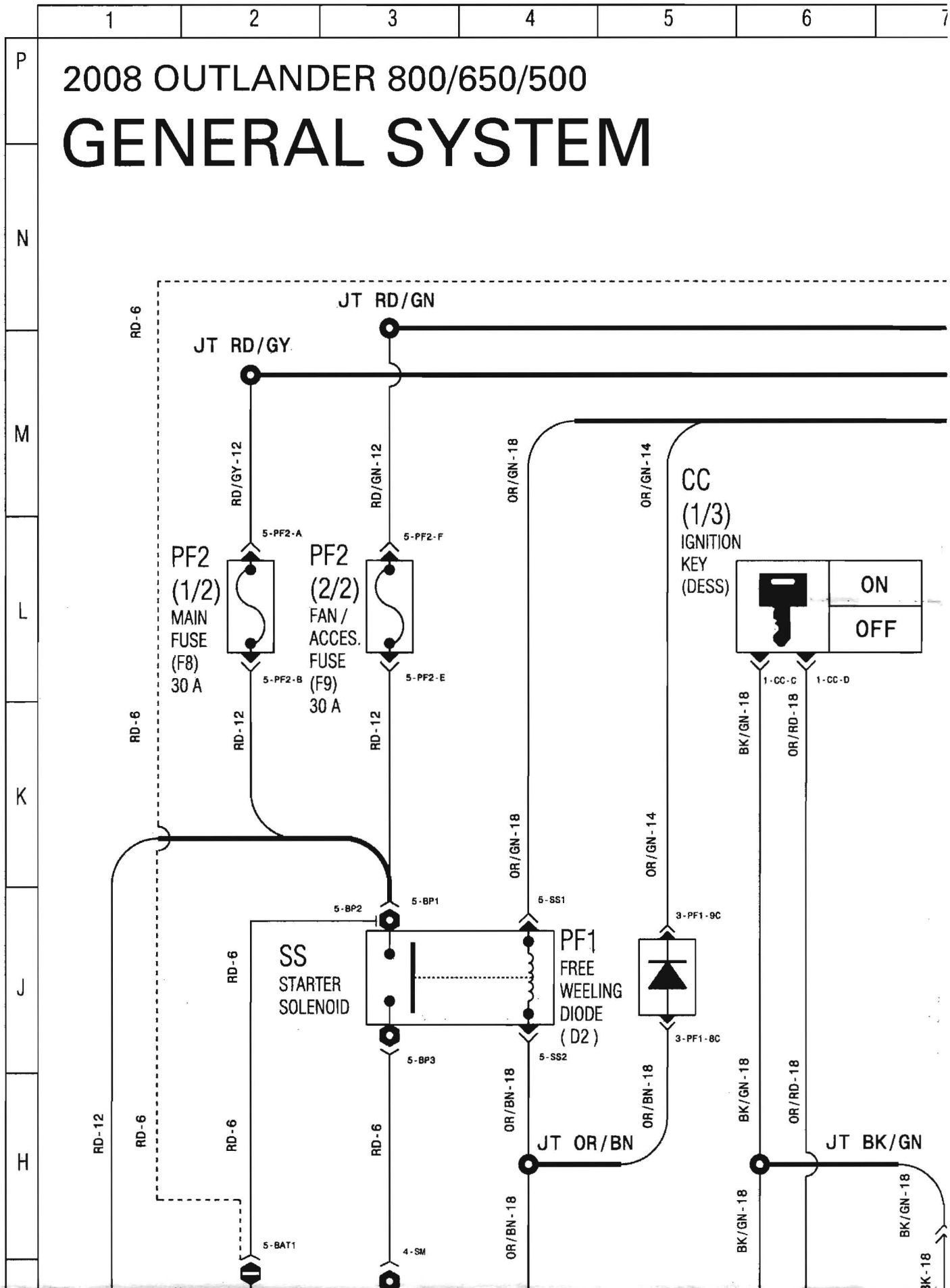

www.midwestmanuals.com

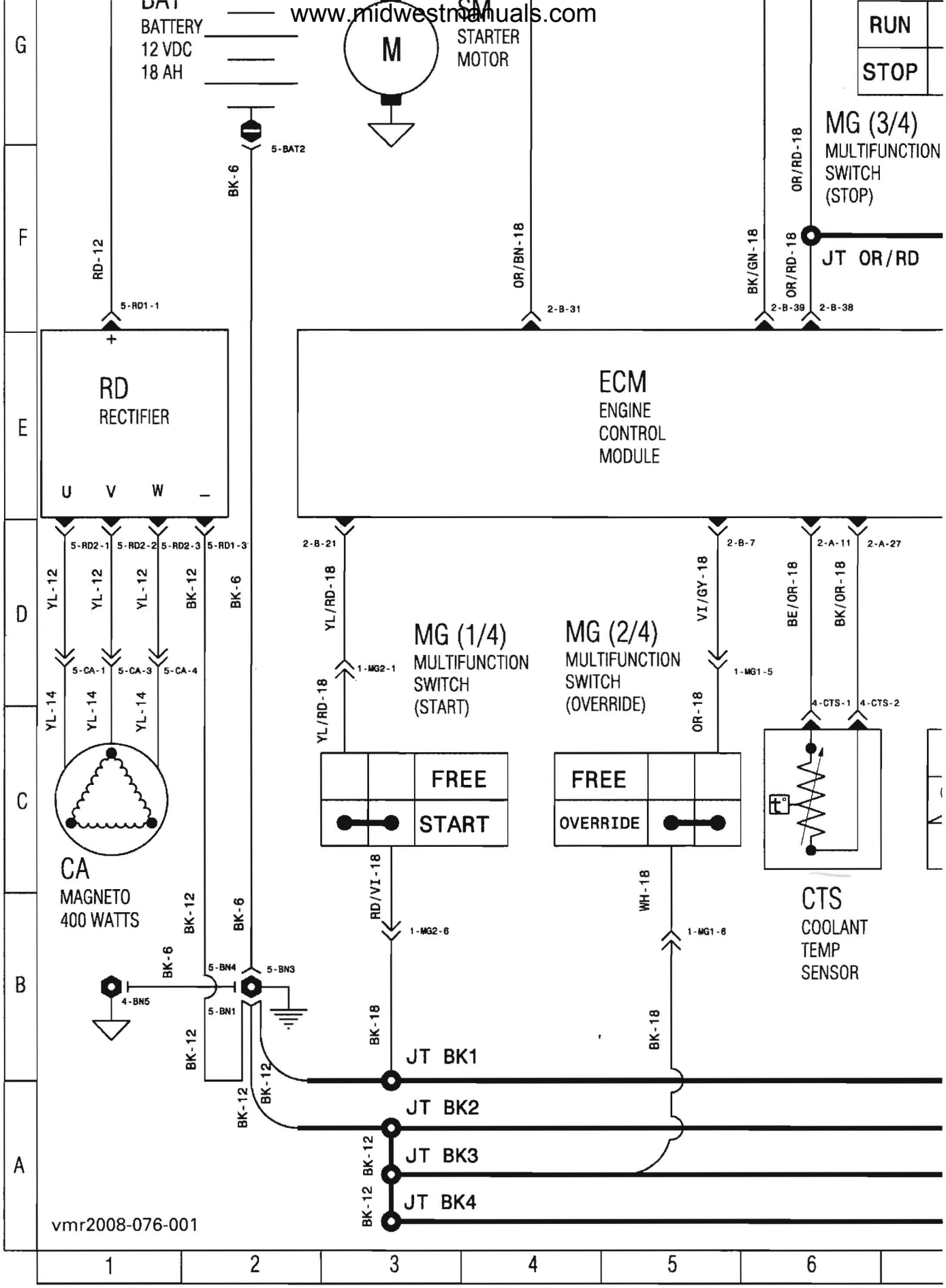

www.midwestmanuals.com

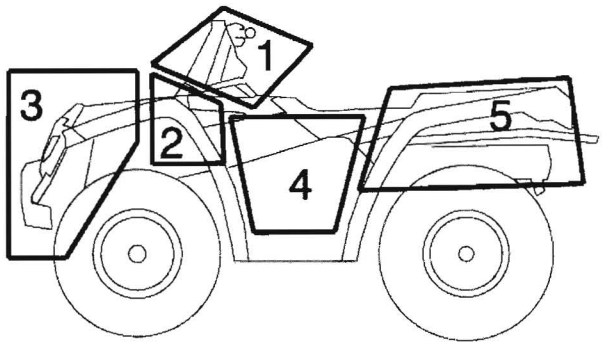

JT OR/GN

RD/GY-14
RD/GY-14
OR/GN-14
VI/GN-16

3-PF1-1B
3-PF1-1A
3-PF1-6C
3-PF1-4E

PF1
MAIN
RELAY
(R2)
10 A

PF1
RELAYS
SPEEDO
FUSE
(F4)
7.5 A

PF1
IGNITION
COIL
FUSE
(F1)
5 A

3-PF1-3A
3-PF1-3B
3-PF1-7C
3-PF1-5E

OR/BU-18
RD/BE-14
RD/BE-14
RD/BE-14

JT OR/BU
JT RD/BE

VI/GN-16
2-HIC-2
HIC
HARN
INTER
CONN

VI/GN-16

BA
IGNITI
COIL

OR/BU-18
OR/BU-18
RD/BE-14
RD/BE-14
RD/BE-14

4-BA-2

3-PF1-8D
3-PF1-9B
3-PF1-5A
3-PF1-5C

PF1
ONEWAY
DIODE
(D1)

PF1
FUEL
PUMP
FUSE
(F5)
7.5 A

PF1
ECM
FUSE
(F6)
5 A

PF1
INJECTORS
FUSE
(F3)
5 A

3-PF1-9D
3-PF1-8B
3-PF1-4A
3-PF1-4C

YL/BN-18
BU/GY-18
BE-18
VI/BU-16

HIC
HARNESS
INTER
CONNECTION

2-HIC-3

4-BA-1

BN/OR-16

JT YL/BN
JT VI/BU

YL/BN-18
YL/BN-18
VI/BU-18
VI/BU-18

INJ1
FUEL
INJECTOR
(FRONT)

INJ2
FUEL
INJECTOR
(REAR)

BK
BK-14

1-MG1-1

FP
(1/2)

5-FP-3

4-INJ1-2
4-INJ2-2

BN-18
YL/BN-18

www.midwestmanuals.com

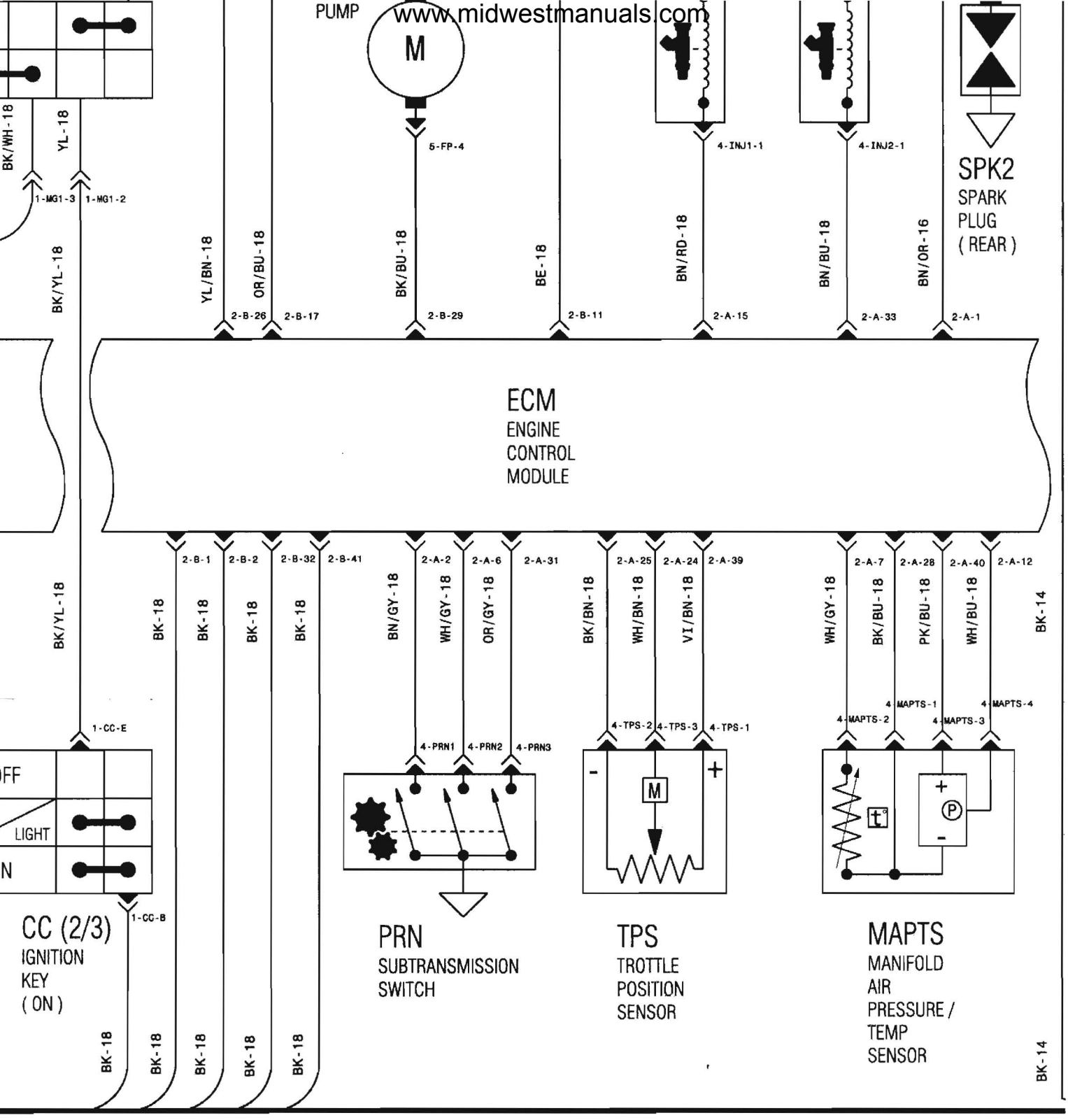

	8	9	10	11	12	13	14

www.midwestmanuals.com

15	16	17	18	19	20	21	22

TERMINAL IDENTIFICATION	
NAME	ZONE-CONNECTOR NAME-TERMINAL #/A
CI	1 - CI - 15
CV	4 - CV - A
ME	2 - ME

AWG	MAX. CURRENT	MAX. FUSE CURRENT	MAX. WATT
# 6	100 amps	125 amps	1450 watts
# 8	65 amps	80 amps	930 watts
# 10	40 amps	50 amps	580 watts
# 12	25 amps	30 amps	365 watts
# 14	16 amps	20 amps	230 watts
# 16	10 amps	15 amps	145 watts
# 18	6 amps	7.5 amps	85 watts
* AT	50°C MAX		

ZONE #
1
2
3
4
5

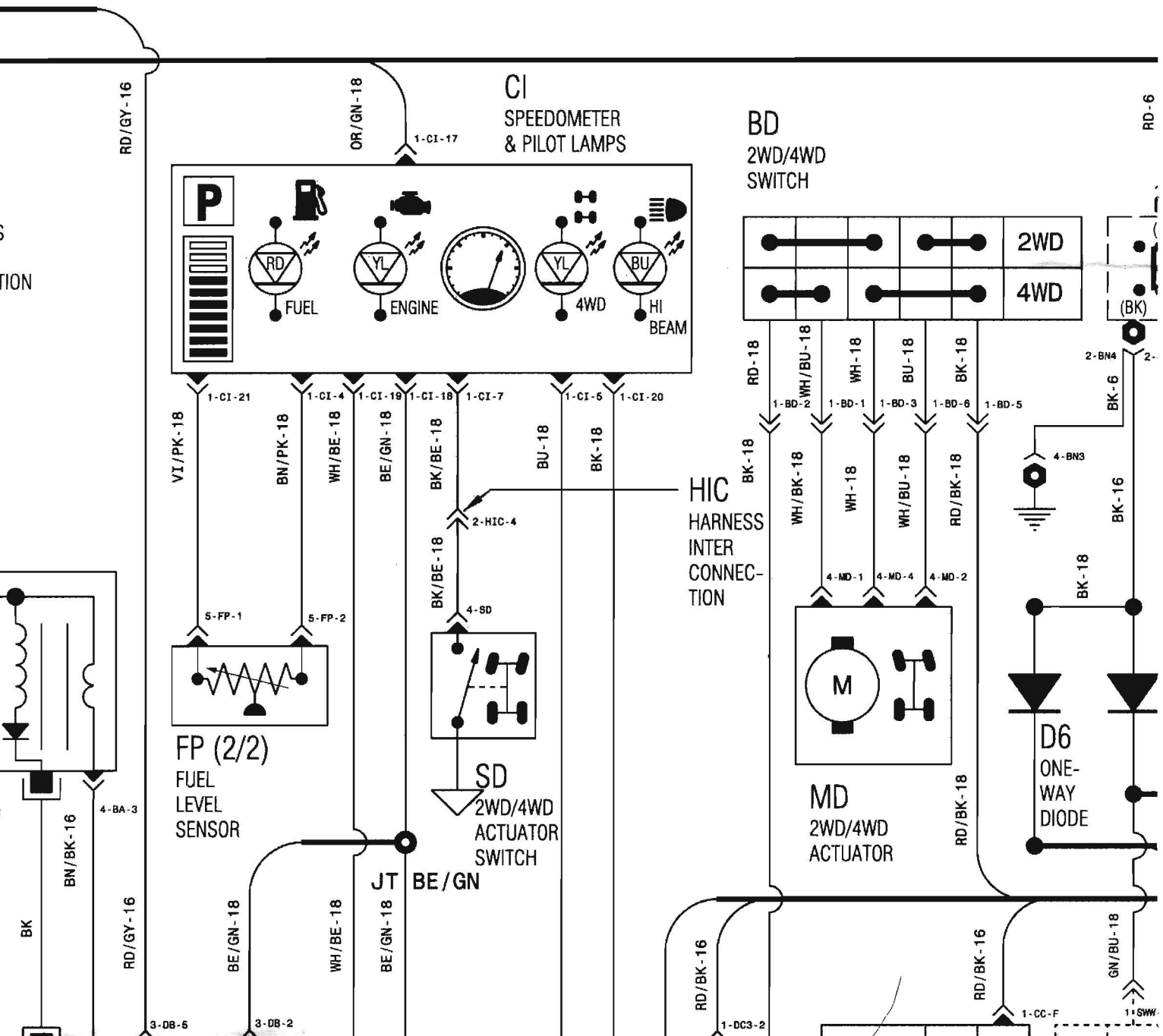

www.midwestmanuals.com

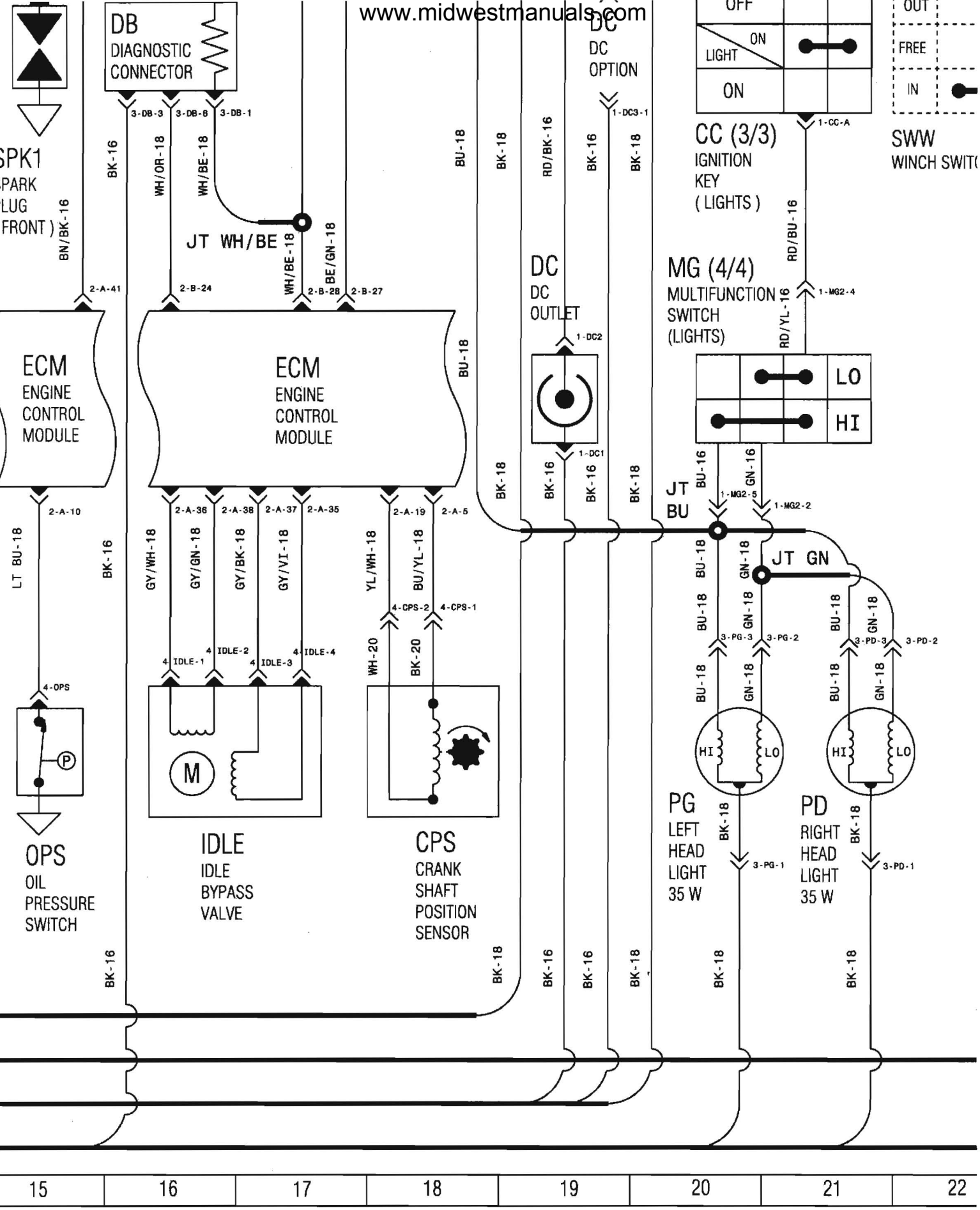

15	16	17	18	19	20	21	22

www.midwestmanuals.com

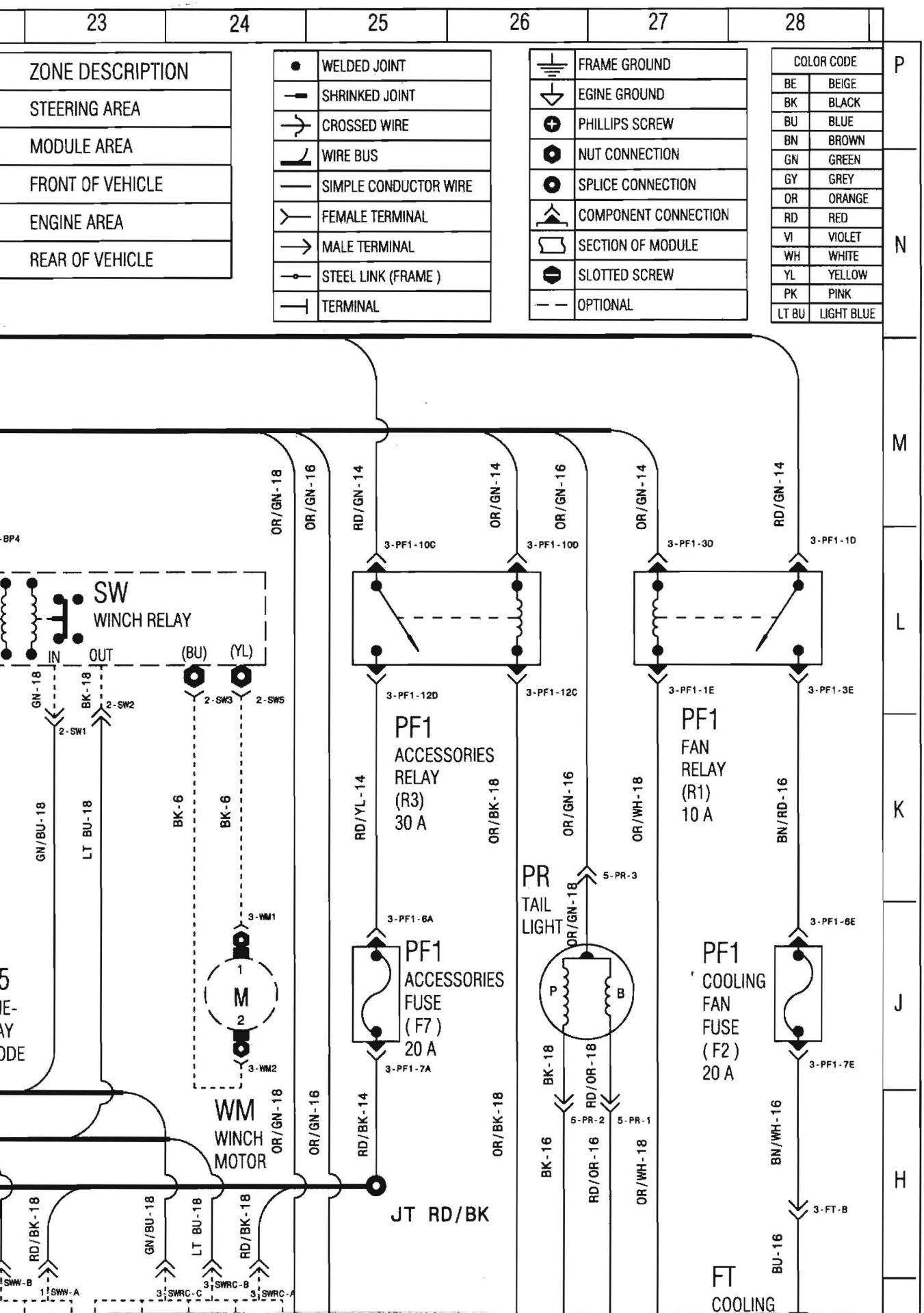

www.midwestmanuals.com

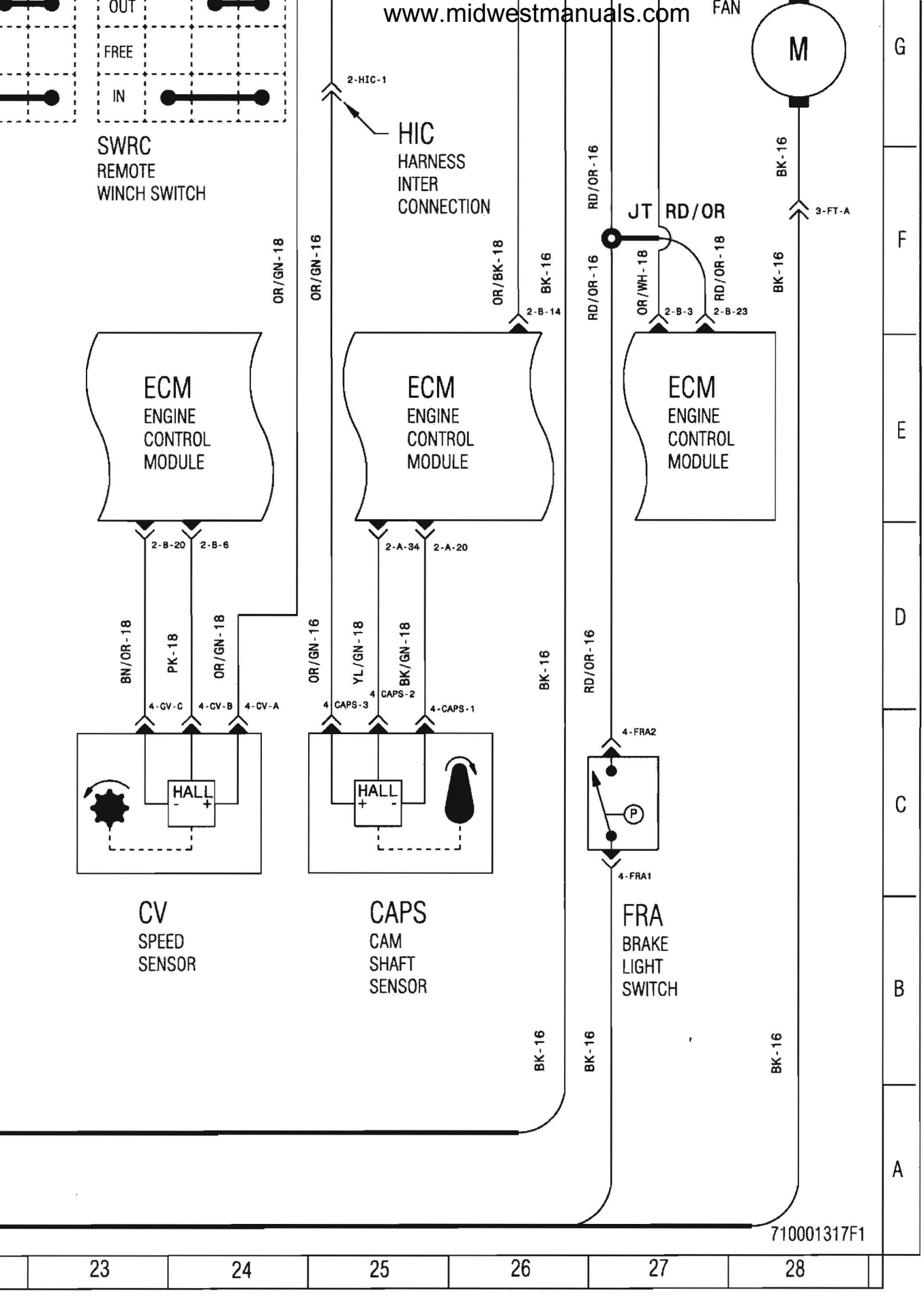

www.midwestmanuals.com

2008 OUTLANDER 800/650/500

CHARGING SYSTEM

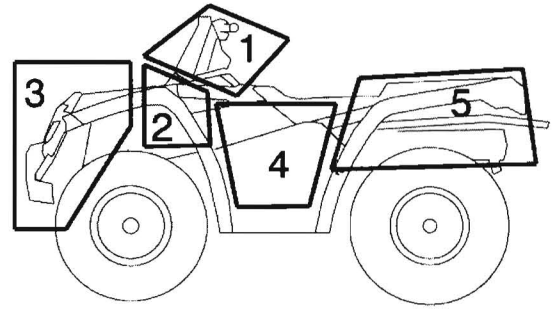

ZONE #	ZONE DESCRIPTION
1	STEERING AREA
2	MODULE AREA
3	FRONT OF VEHICLE
4	ENGINE AREA
5	REAR OF VEHICLE

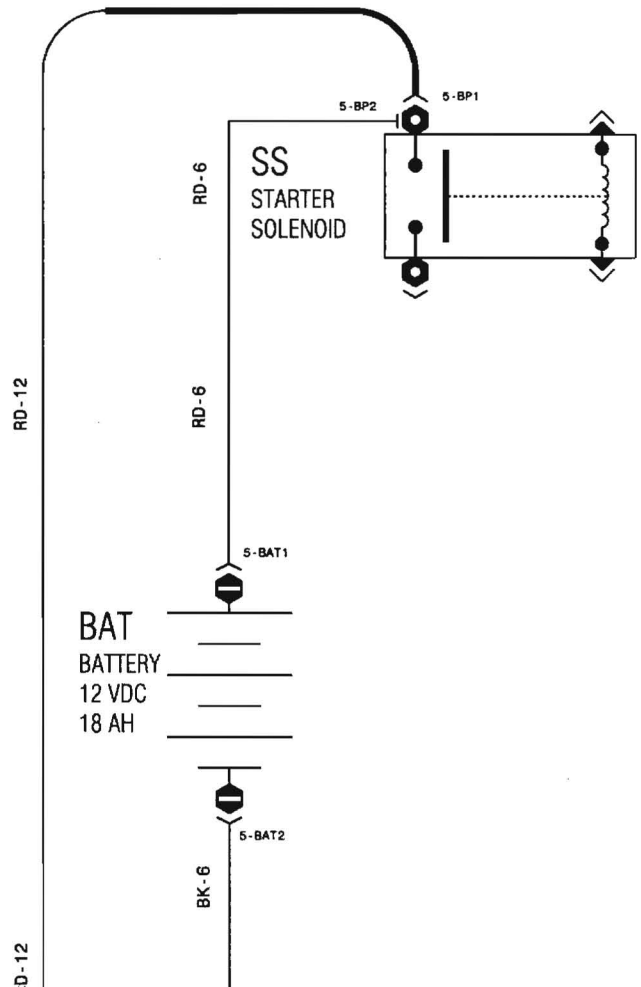

www.midwestmanuals.com

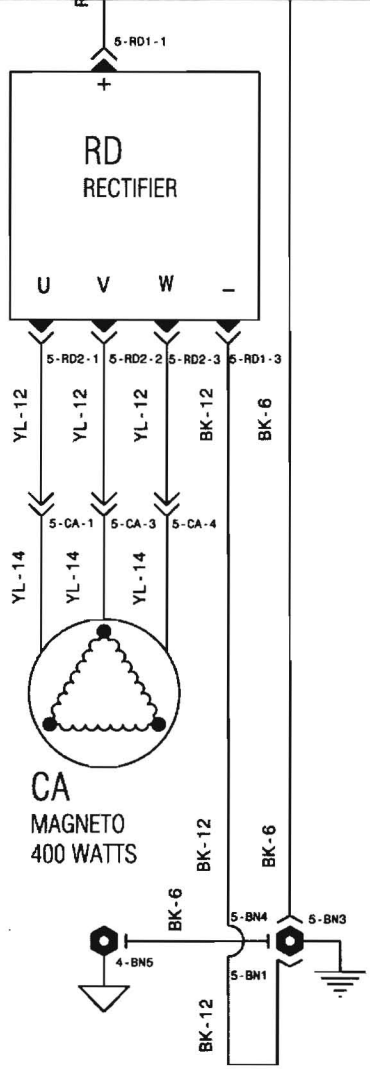

710001317F3

nr2008-076-004

www.midwestmanuals.com

2008 OUTLANDER 800/650/500

STARTING SYSTEM

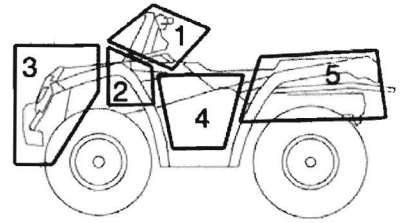

ZONE #	ZONE DESCRIPTION
1	STEERING AREA
2	MODULE AREA
3	FRONT OF VEHICLE
4	ENGINE AREA
5	REAR OF VEHICLE

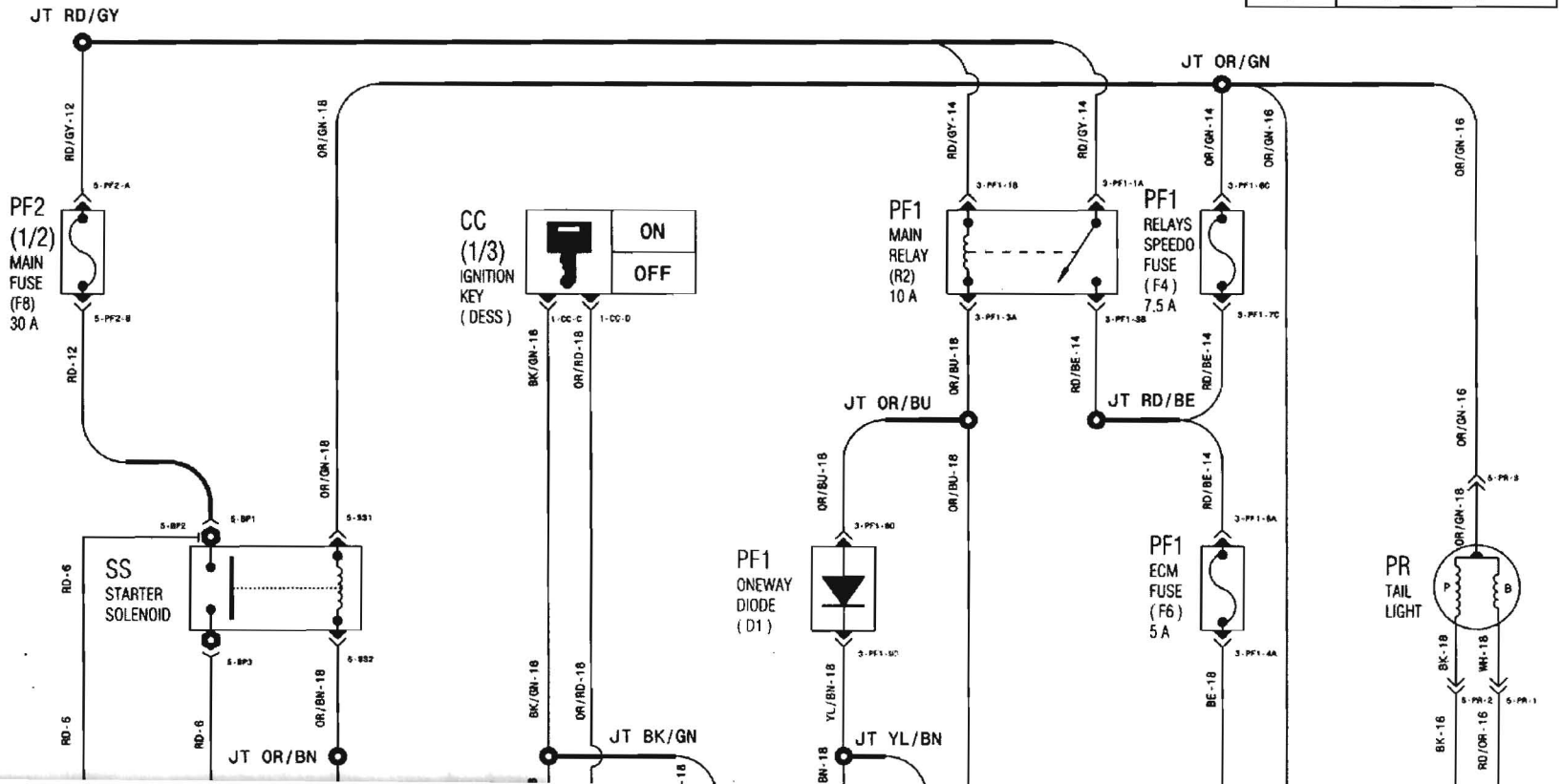

www.midwestmanuals.com

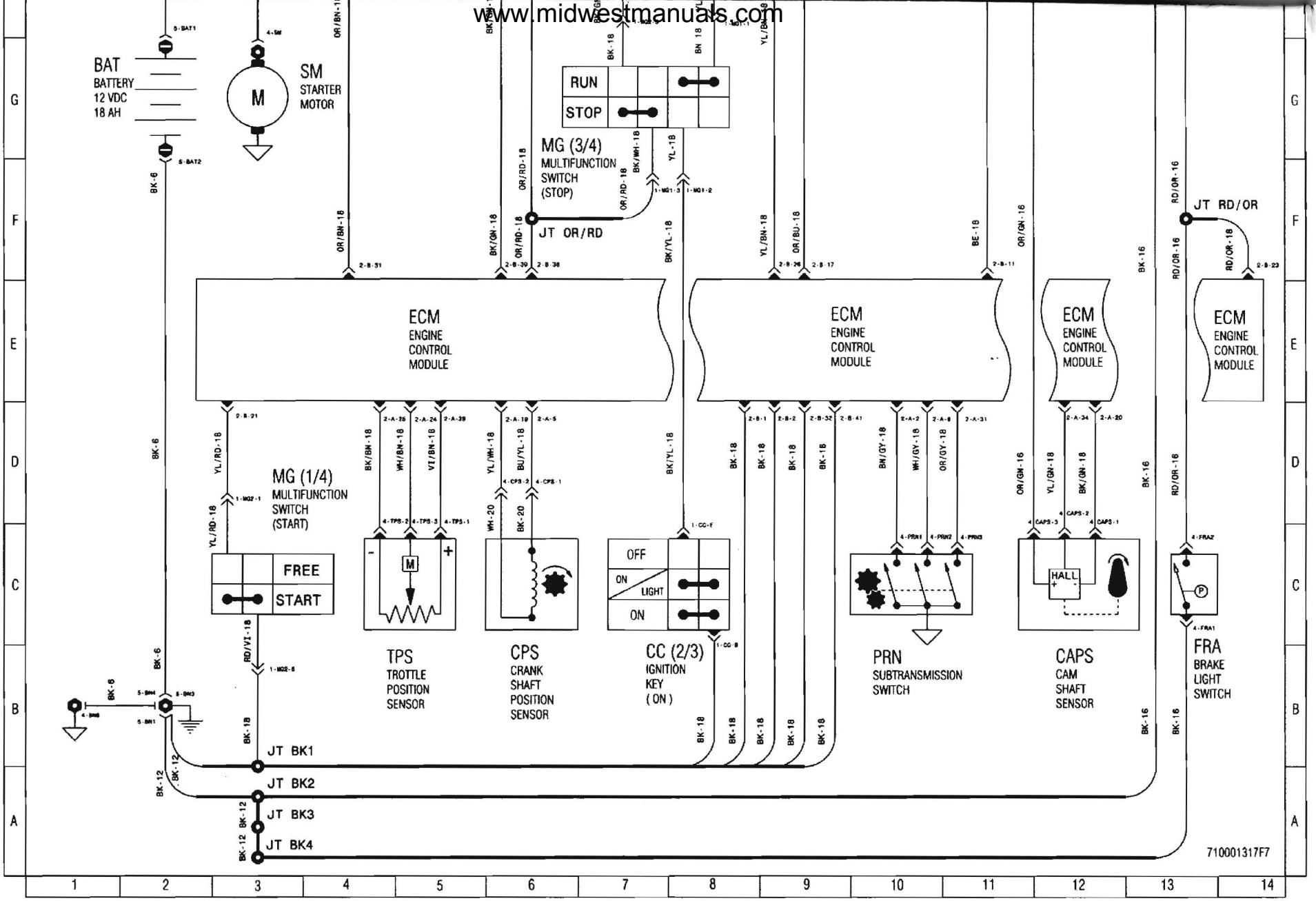

www.midwestmanuals.com

2008 OUTLANDER 800/650/500

INJECTION/IGNITION SYSTEM

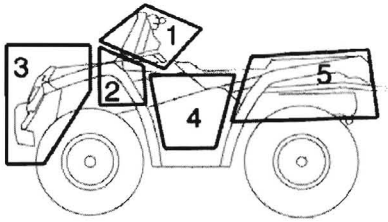

ZONE #	ZONE DESCRIPTION
1	STEERING AREA
2	MODULE AREA
3	FRONT OF VEHICLE
4	ENGINE AREA
5	REAR OF VEHICLE

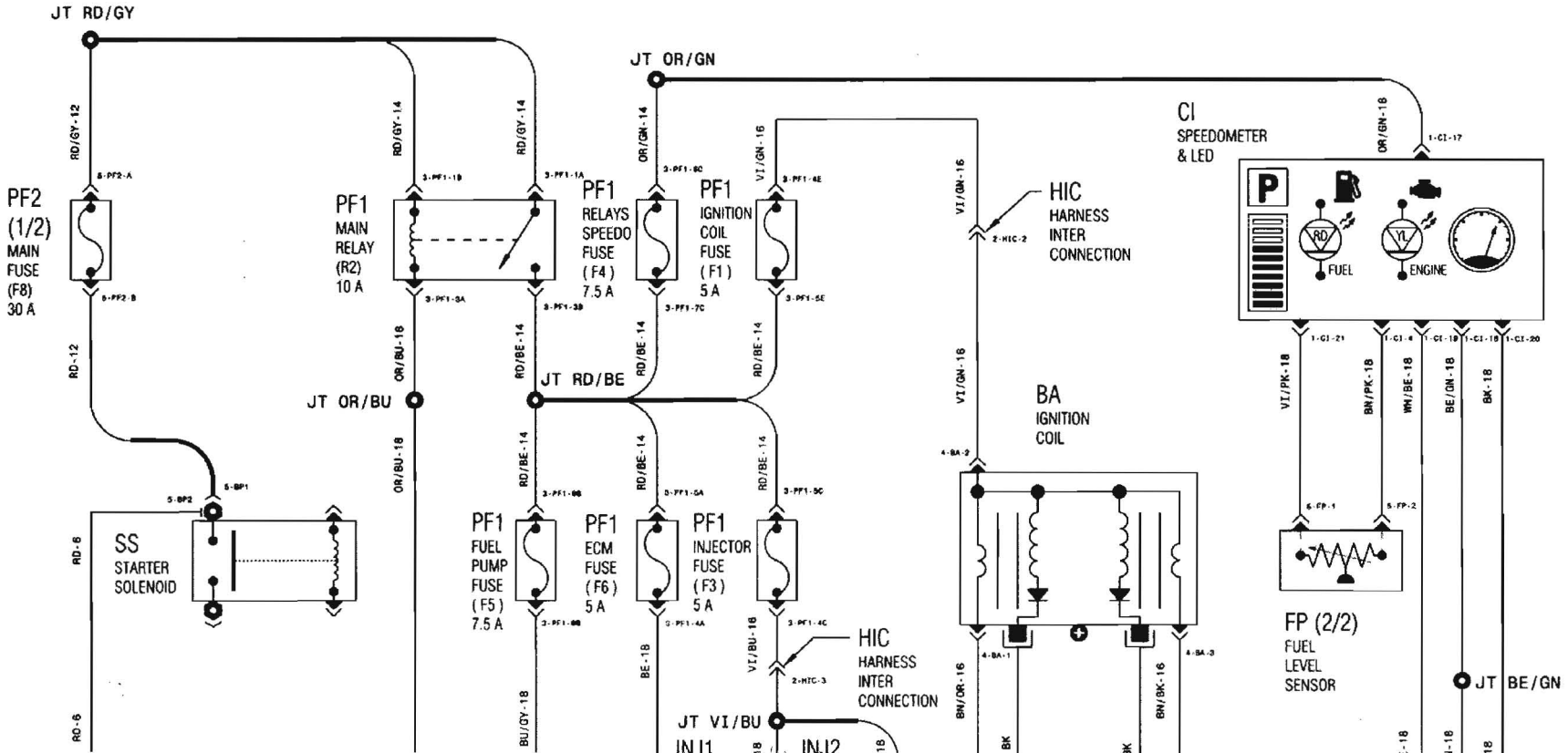

www.midwestmanuals.com

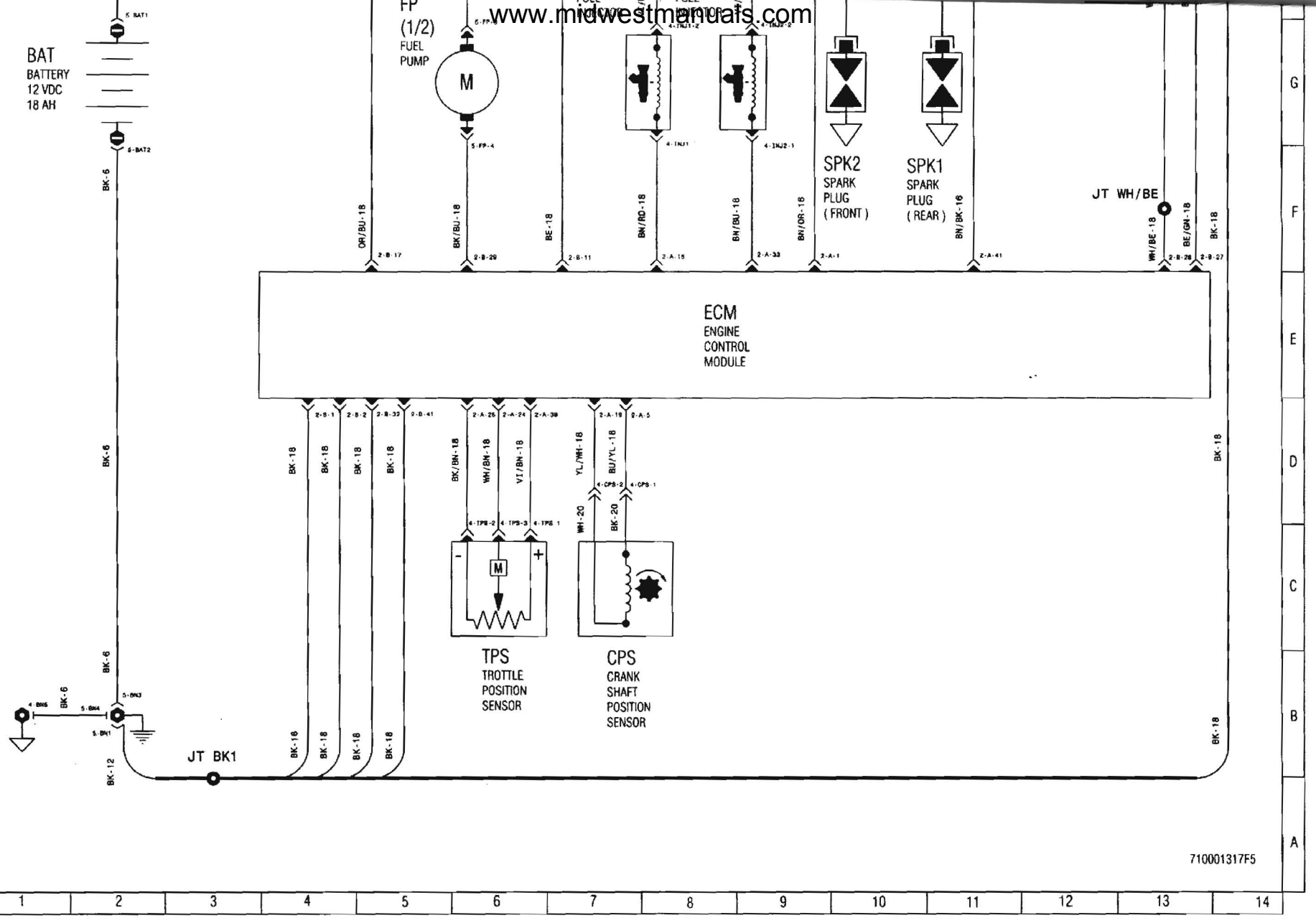

www.midwestmanuals.com

2008 OUTLANDER 800/650/500

DISTRIBUTION SYSTEM

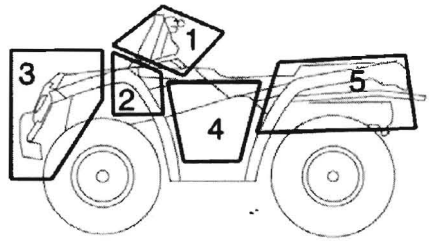

ZONE #	ZONE DESCRIPTION
1	STEERING AREA
2	MODULE AREA
3	FRONT OF VEHICLE
4	ENGINE AREA
5	REAR OF VEHICLE

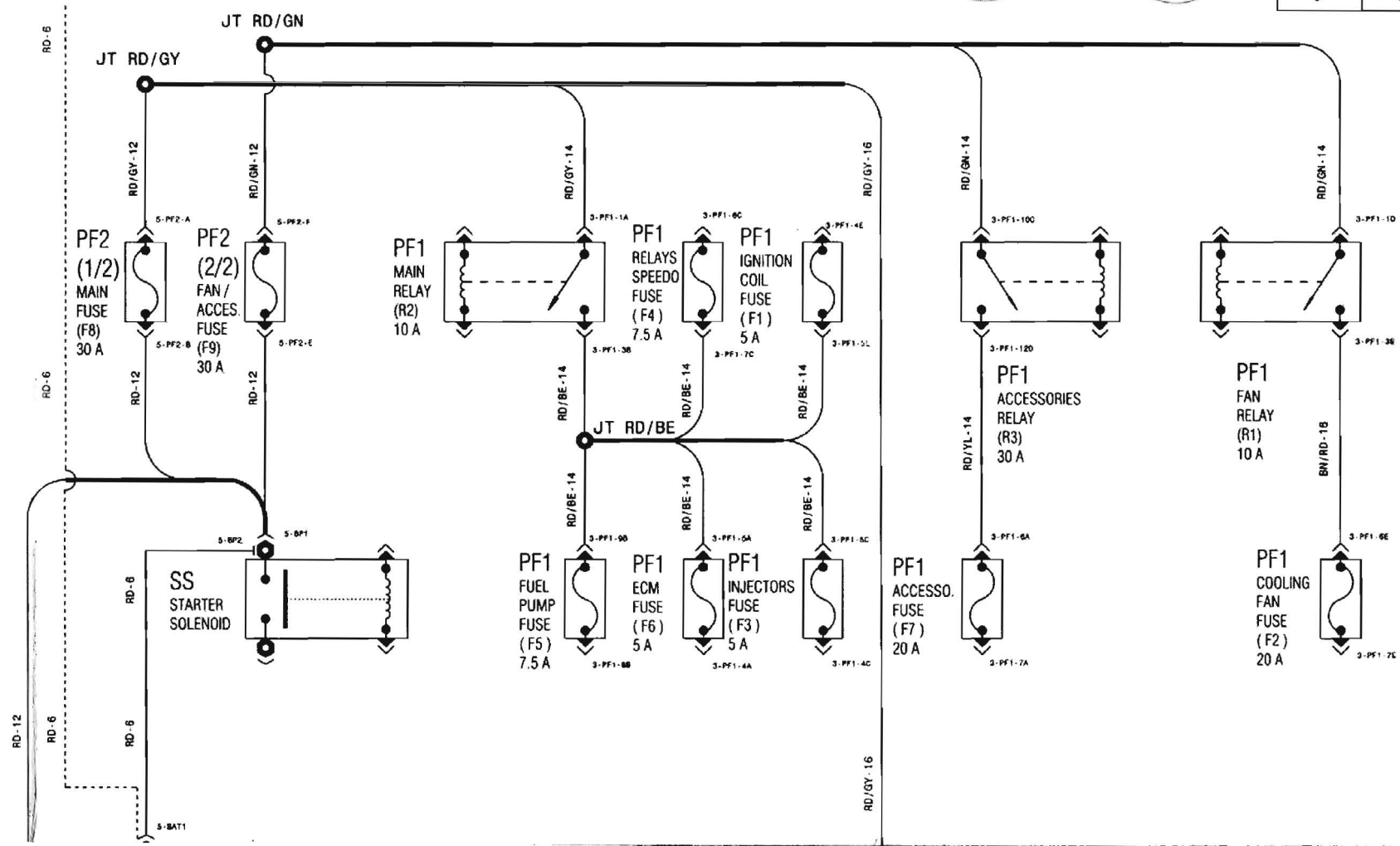

www.midwestmanuals.com

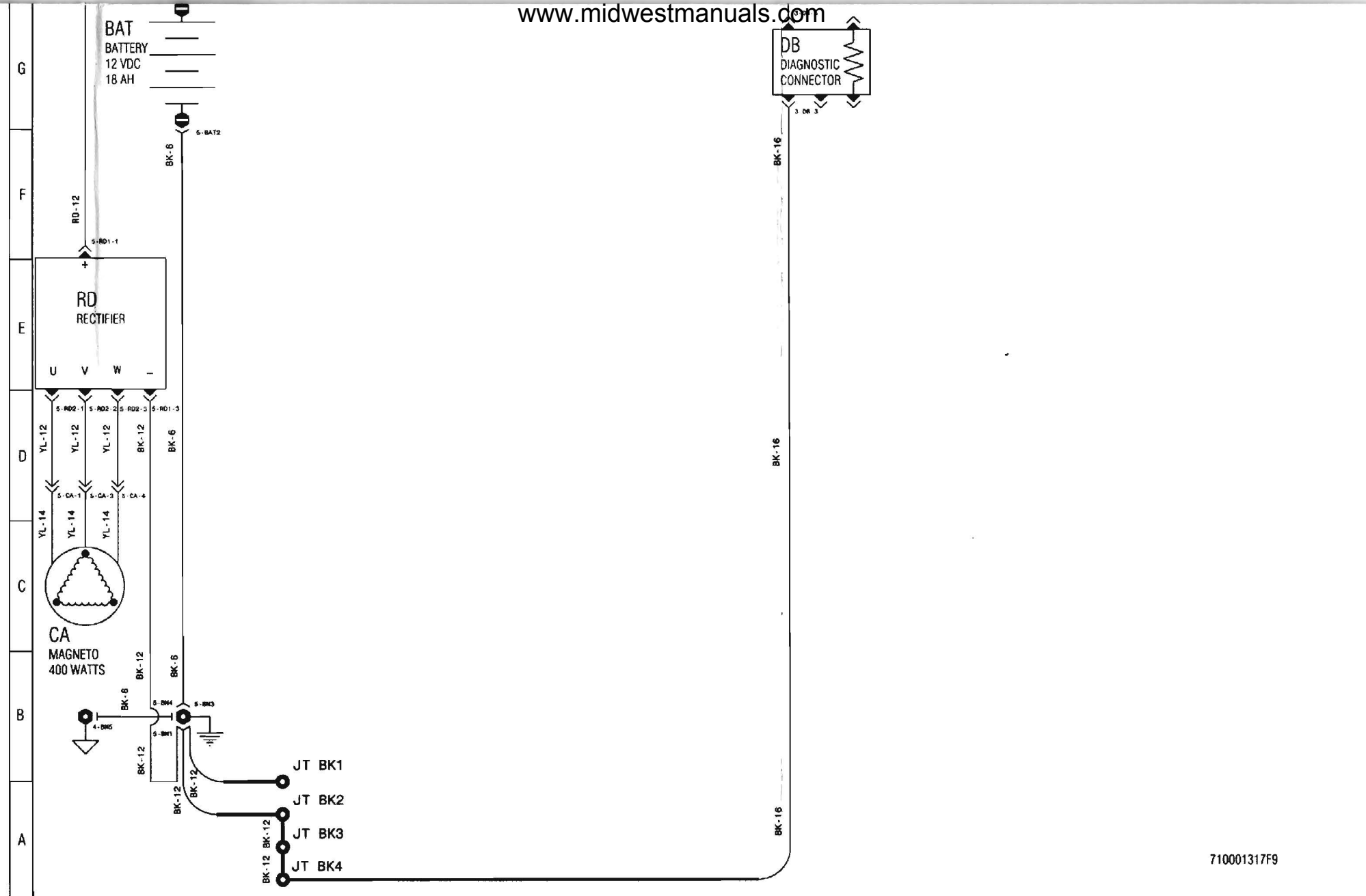

www.midwestmanuals.com

2008 OUTLANDER 800/650/500

ACCESSORIES SYSTEM

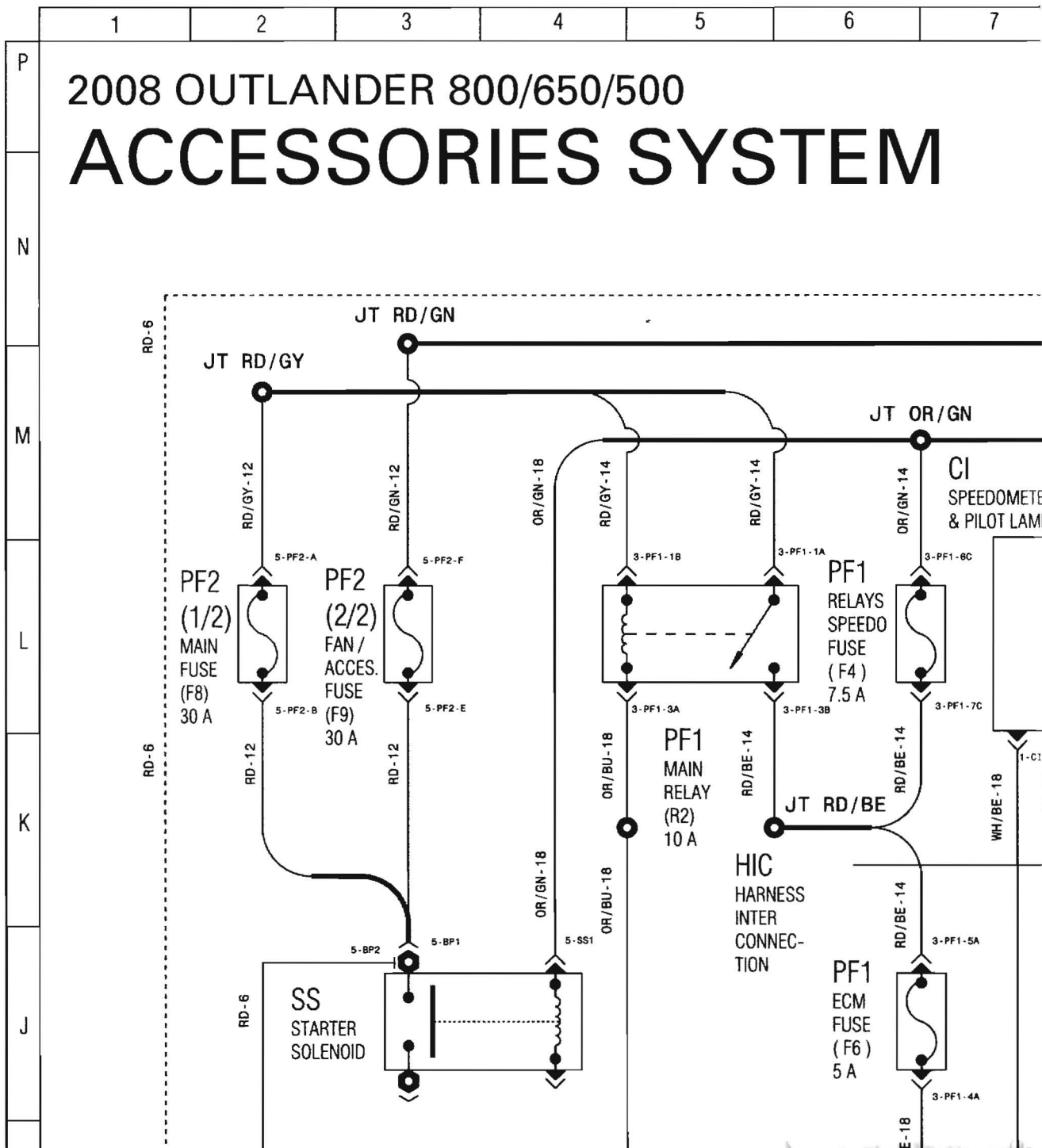

www.midwestmanuals.com

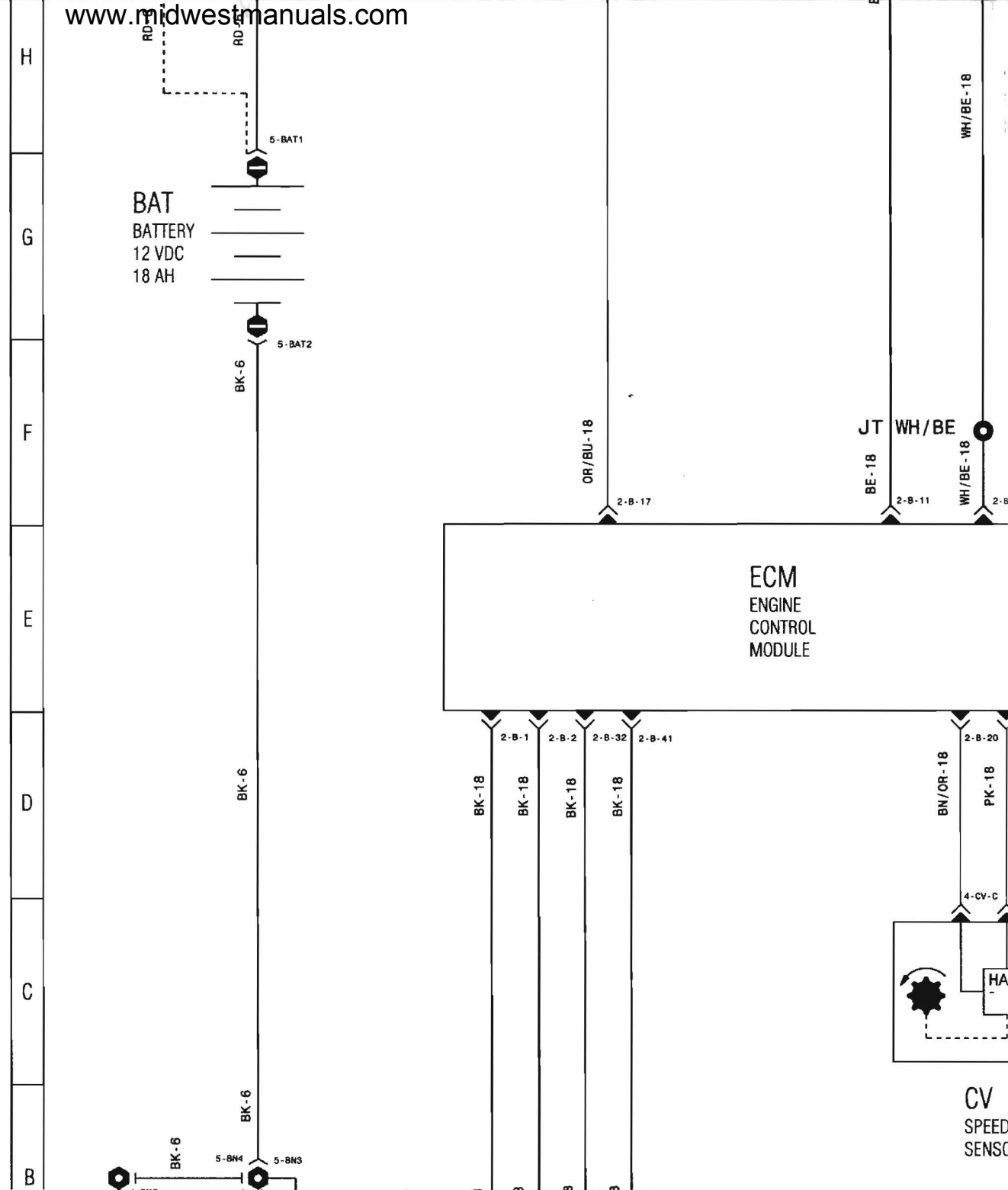

www.midwestmanuals.com

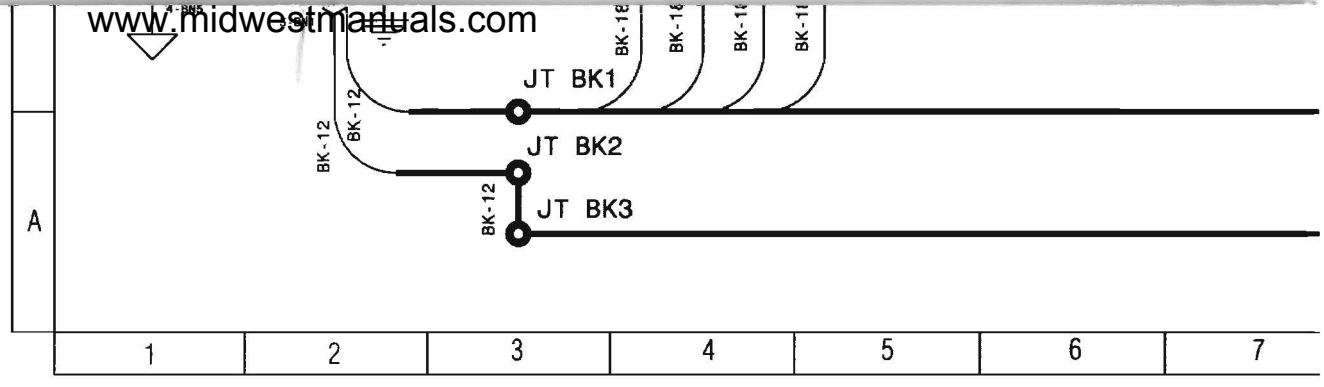

www.midwestmanuals.com

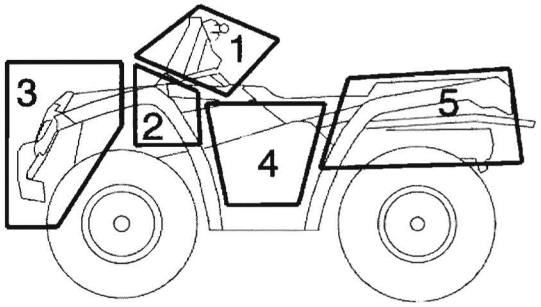

ZONE #	ZONE DESCRIPTION
1	STEERING AREA
2	MODULE AREA
3	FRONT OF VEHICLE
4	ENGINE AREA
5	REAR OF VEHICLE

www.midwestmanuals.com

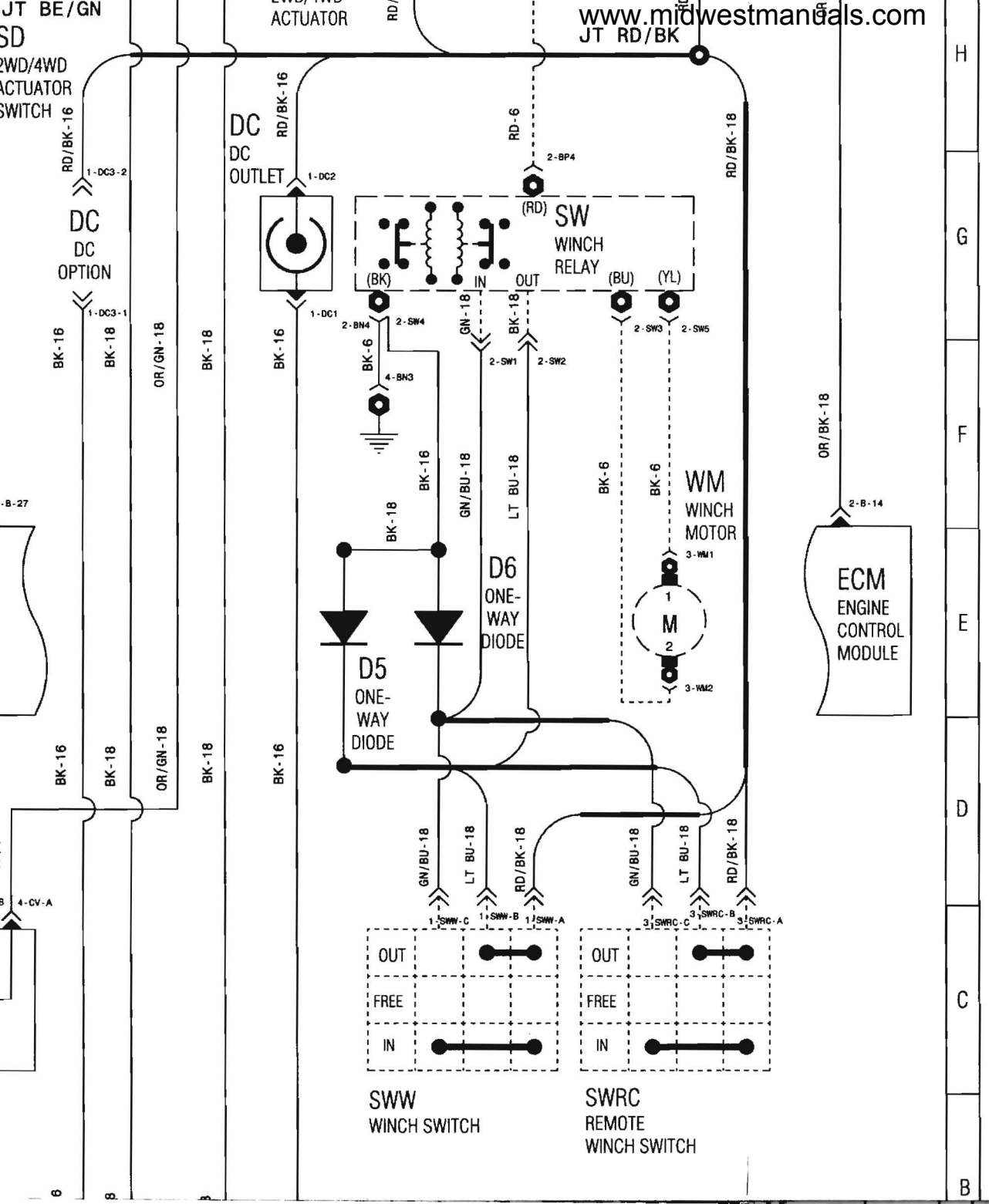

www.midwestmanuals.com

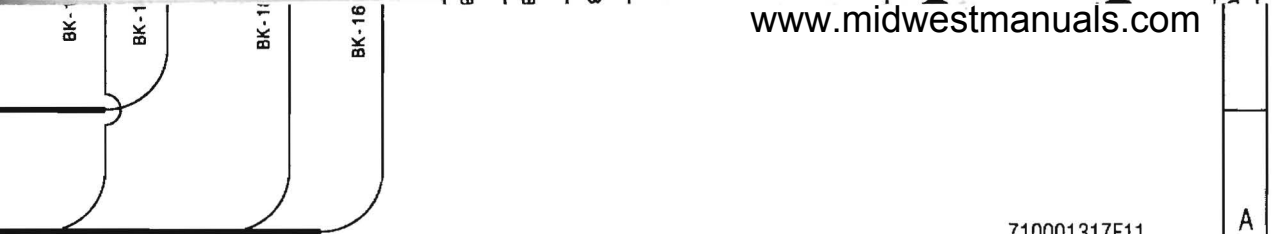

710001317F11

A

8 9 10 11 12 13 14

www.midwestmanuals.com

2009 Shop Manual Supplement

Outlander™ Series
500/650/800R EFI

Renegade™ Series
500/800R EFI

can-am BRP

www.midwestmanuals.com

TABLE OF CONTENTS

SAFETY NOTICE III

INTRODUCTION IV

03 ENGINE AND GEARBOX (V490/V660/V810)

02 – AIR INTAKE SYSTEM 1
- PROCEDURES 2
  - AIR FILTER 2

07 – INTAKE MANIFOLD, CYLINDER HEAD AND CYLINDER 5
- GENERAL 9
- PROCEDURES 9
  - CAMSHAFT 9

09 – GEARBOX AND 4X4 COUPLING UNIT 11
- GENERAL 13
- PROCEDURES 13
  - GEARBOX POSITION INDICATOR SWITCHES 13
  - 4WD INDICATOR SWITCH 14

04 ENGINE MANAGEMENT (V490/V660/V810)

03 – ADJUSTMENT AND REPAIR PROCEDURES 17
- GENERAL 17
- PROCEDURES 17
  - FUEL INJECTOR 17
  - THROTTLE CABLE 18

05 FUEL SYSTEM

01 – FUEL TANK AND FUEL PUMP 21
- GENERAL 23
  - SYSTEM DESCRIPTION 23
- INSPECTION 24
  - FUEL TANK LEAK TEST 24
  - FUEL PUMP PRESSURE TEST 26
- PROCEDURES 27
  - FUEL HOSE AND OETIKER CLAMPS 27
  - FUEL TANK 28
  - FUEL PUMP 31
  - FUEL LEVEL SENSOR 38

06 ELECTRICAL SYSTEM

03 – CHARGING SYSTEM 41
- GENERAL 41
- PROCEDURES 41
  - STATOR 41

10 SUSPENSION

02 – REAR SUSPENSION 43
- GENERAL 45
- PROCEDURES 45
  - TORSION BAR 45
  - TRAILING ARM 45

11 BRAKES

01 – FRONT AND REAR BRAKES 47
- GENERAL 53
  - SYSTEM DESCRIPTION 53

www.midwestmanuals.com

TABLE OF CONTENTS

11 BRAKES (cont'd)

01 – FRONT AND REAR BRAKES (cont'd)

MAINTENANCE 54
BRAKE FLUID 54
PROCEDURES 57
REAR BRAKE LIGHT SWITCH 57
FRONT BRAKE LIGHT SWITCH 58
PARKING BRAKE MECHANISM 58
BRAKE LEVER 59
FRONT MASTER CYLINDER 59
REAR MASTER CYLINDER 60
CALIPER 62
BRAKE PADS 63
BRAKE DISC 64
BRAKE PEDAL 65
BRAKE CIRCUIT SPLITTERS (RENEGADE CE MODELS) 66
BRAKE HOSES 67

12 BODY/FRAME

01 – BODY 69
GENERAL 83
PROCEDURES 83
CENTRAL PANEL 83
HEAVY DUTY BUMPER 84
FRONT BUMPER/FRONT SKID PLATE/FRONT FASCIA 85

13 TECHNICAL SPECIFICATIONS

01 – OUTLANDER 87
02 – RENEGADE 97

www.midwestmanuals.com

SAFETY NOTICE

This manual has been prepared as a guide to correctly service and repair 2009 Can-Am ATVs as describe in the model list in the *INTRODUCTION*.

This *SHOP MANUAL SUPPLEMENT* must be used in conjunction with the *2008 CAN-AM SHOP MANUAL* (P/N 219 100 273). Refer to this manual when a particular system is not covered in this supplement.

This edition was primarily published to be used by mechanical technicians who are already familiar with all service procedures relating to BRP products. Mechanical technicians should attend training courses given by B.R.P.T.I.

Please note that the instructions will apply only if proper hand tools and special service tools are used.

It is understood that this manual may be translated into another language. In the event of any discrepancy, the English version shall prevail.

The content depicts parts and/or procedures applicable to the particular product at time of writing. Service and Warranty Bulletins may be published to update the content of this manual. Make sure to read and understand these. It does not include dealer modifications, whether authorized or not by BRP, after manufacturing the product.

In addition, the sole purpose of the illustrations throughout the manual, is to assist identification of the general configuration of the parts. They are not to be interpreted as technical drawings or exact replicas of the parts.

The use of BRP parts is most strongly recommended when considering replacement of any component. Dealer and/or distributor assistance should be sought in case of doubt.

The engines and the corresponding components identified in this document should not be utilized on product(s) other than those for which it was designed.

⚠ WARNING

Unless otherwise specified, engine should be turned OFF and cold for all maintenance and repair procedures.

This manual emphasizes particular information denoted by the wording and symbols:

⚠ WARNING

Identifies an instruction which, if not followed, could cause serious personal injury including possibility of death.

⚠ CAUTION Denotes an instruction which, if not followed, could severely damage vehicle components.

NOTE: Indicates supplementary information needed to fully complete an instruction.

Although the mere reading of such information does not eliminate the hazard, your understanding of the information will promote its correct use. Always use common shop safety practice.

BRP disclaims liability for all damages and/or injuries resulting from the improper use of the contents. We strongly recommend that any services be carried out and/or verified by a highly skilled professional mechanic. It is understood that certain modifications may render use of the vehicle illegal under existing federal, provincial and state regulations.

www.midwestmanuals.com

INTRODUCTION

This shop manual supplement covers the following BRP made 2009 Can-Am ATVs.

MODEL	COLOR	ENGINE	MODEL NUMBER
Outlander 500	Red, Yellow	V490	2T9A, 2T9B
Outlander 500 XT	Black, Camo, Red, Yellow	V490	2U9A, 2U9B, 2U9C, 2U9D, 2U9E, 2U9F
Outlander MAX 500	Red	V490	2W9A
Outlander MAX 500 XT	Black, Camo, Red, Yellow	V490	2X9A, 2X9B, 2X9C, 2X9D, 2X9E, 2X9F
Outlander 650	Red, Yellow	V660	2N9A, 2N9B, 2N9C
Outlander 650 XT	Black, Camo, Red, Yellow	V660	2P9A, 2P9B, 2P9C, 2P9D, 2P9E, 2P9F, 2P9G, 2P9H, 2P9J
Outlander MAX 650	Red, Yellow	V660	2R9A, 2R9B, 2R9C, 2R9D,9
Outlander MAX 650 XT	Black, Camo, Red, Yellow	V660	2S9A, 2S9B, 2S9C, 2S9D, 2S9E, 2S9F, 2S9G, 2S9H, 2S9J
Outlander 800	Yellow	V810	2H9E
Outlander 800 XT	Black, Camo, Red, Yellow	V810	2J9J, 2J9K, 2J9L, 2J9M, 2J9N, 2J9P
Outlander Max 800	Red, Yellow	V810	2K9A, 2K89B, 2K9C, 2K9D
Outlander MAX 800 XT	Black, Camo, Red, Yellow	V810	2L9A, 2L9B, 2L9C, 2L9D, 2l9E, 2L9F, 2L9G, 2L9H, 2L9J
Outlander MAX 800 Ltd	Red	V810	2M9A, 2M9B, 2M9C, 2M9D
Renegade 500	Red, Yellow	V490	4E9A, 4E9B, 4E9C, 4E9D
Renegade 800	Red, Yellow	V810	4B9A, 4B9B, 4B9C, 4B9E, 4B9F
Renegade 800 X	Black	V810	4C8A, 4C8B, 4C8C

The information and component/system descriptions contained in this manual are correct at time of writing. BRP however, maintains a policy of continuous improvement of its products without imposing upon itself any obligation to install them on products previously manufactured.

Due to late changes, there may be some differences between the manufactured product and the description and/or specifications in this document.

BRP reserves the right at any time to discontinue or change specifications, designs, features, models or equipment without incurring obligation.

www.midwestmanuals.com

AIR INTAKE SYSTEM

SERVICE PRODUCTS

Description	Part Number	Page
AIR FILTER CLEANER	219 700 341	2

800R Models

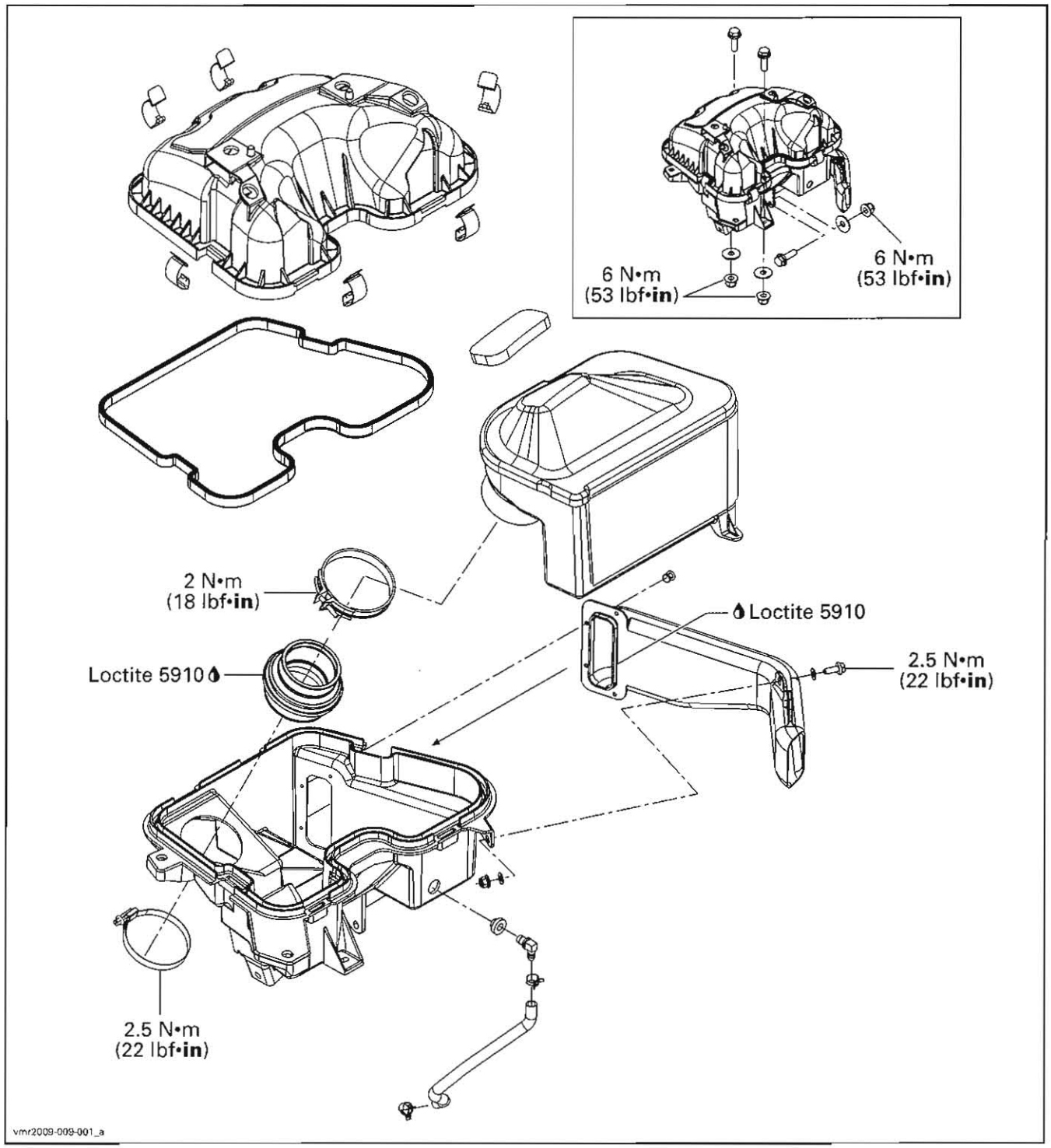

www.midwestmanuals.com

PROCEDURES

AIR FILTER

NOTICE Never remove or modify any component in the air filter housing. The engine management system is calibrated to operate specifically with these components. Otherwise, engine performance degradation or damage can occur.

If vehicle is used in dusty area, inspect more frequently than specified in *MAINTENANCE CHART*.

If liquid or deposits are found, squeeze and dry the foam filter. Replace filter element if damaged.

NOTICE Do not start engine if liquid or deposit are found. If there is oil in the air filter housing, check engine oil level. Oil level may be too high.

Air Filter Removal

800R Models

Remove seat, side panels, central panel and dashboard. Refer to *BODY* section.

Release clamps and remove air filter housing cover.

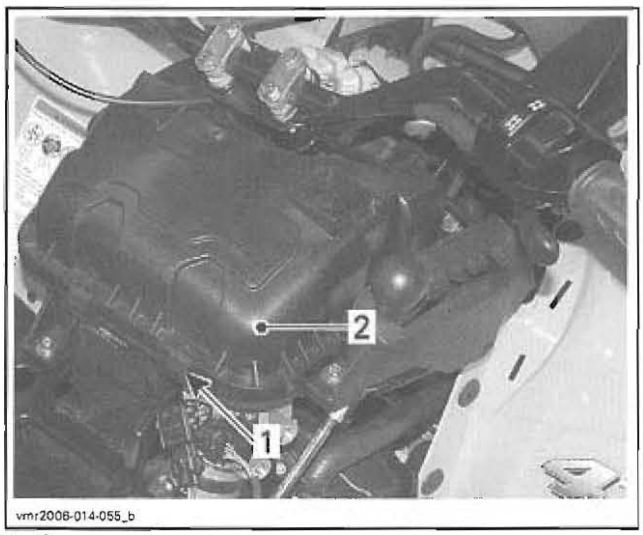

1. Clamps
2. Cover

Loosen clamp and remove air filter.

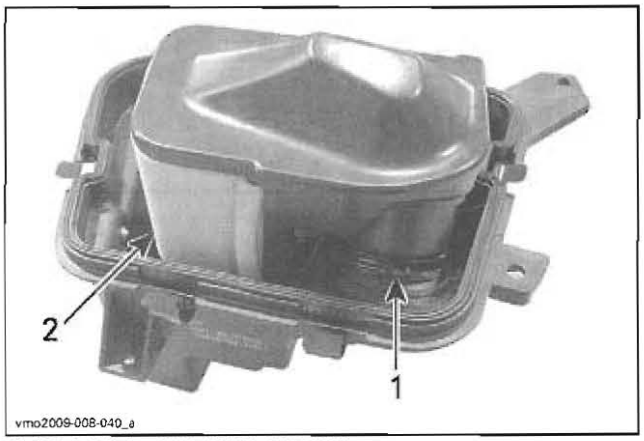

800R ENGINE AIR FILTER SHOWN
1. Clamp
2. Air filter

Remove foam prefilter by carefully pushing the extremities toward the inside.

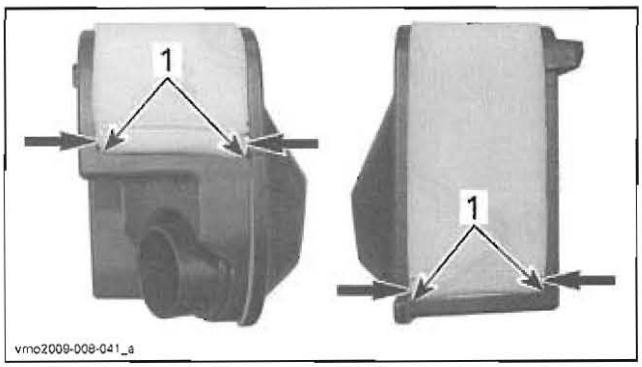

1. Foam prefilter extremities

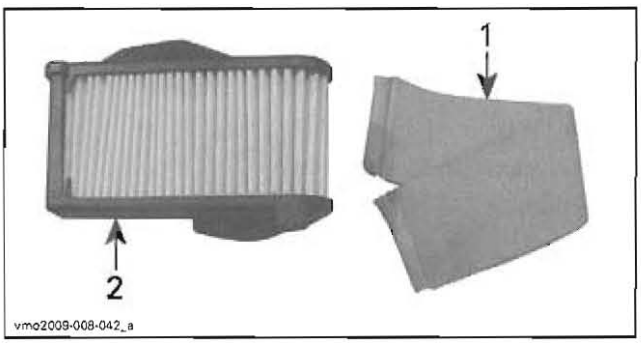

1. Foam prefilter
2. Filter

Air Filter Cleaning

Foam Prefilter Cleaning

1. Pour AIR FILTER CLEANER (P/N 219 700 341) or an equivalent into a bucket.
2. Put the foam prefilter in to soak.
3. While foam prefilter soaks, clean inside the air filter housing.
4. Rinse the foam prefilter with warm water until all cleaning solution disappears.
5. Let the foam prefilter dry completely.

www.midwestmanuals.com

Filter Cleaning

1. Shake the filter vigorously to remove dust from air filter.
2. If necessary, blow low pressure compressed air from inside of filter to clean it.

NOTICE Do not wash the paper filter with any cleaning solution.

Air Filter Installation

1. Properly reinstall removed parts in the reverse order of their removal.

Midwest Manuals
sales@midwestmanuals.com
www.midwestmanuals.com

www.midwestmanuals.com

www.midwestmanuals.com

INTAKE MANIFOLD, CYLINDER HEAD AND CYLINDER

INTAKE MANIFOLD

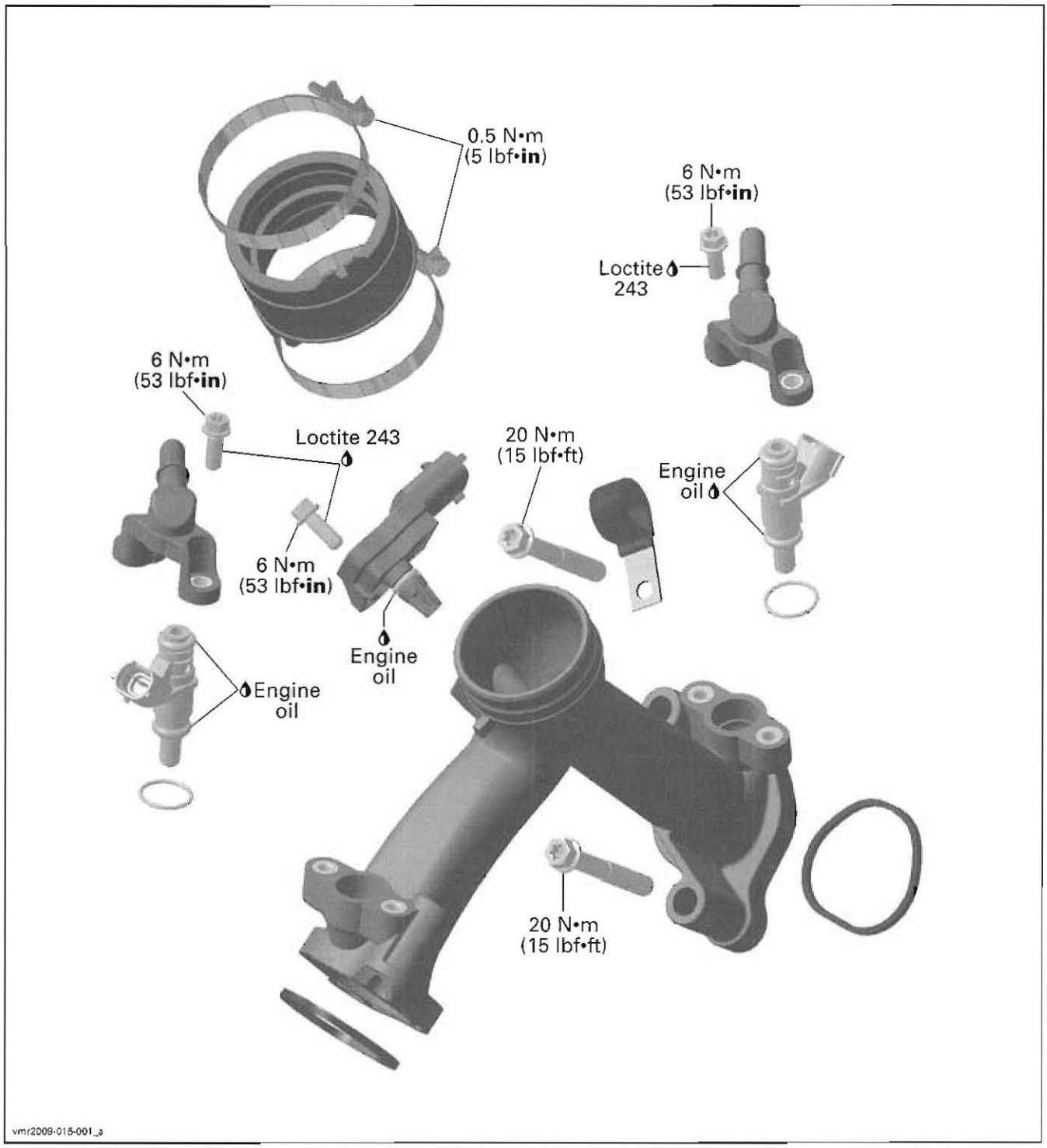

www.midwestmanuals.com

CYLINDER HEAD NO. 1

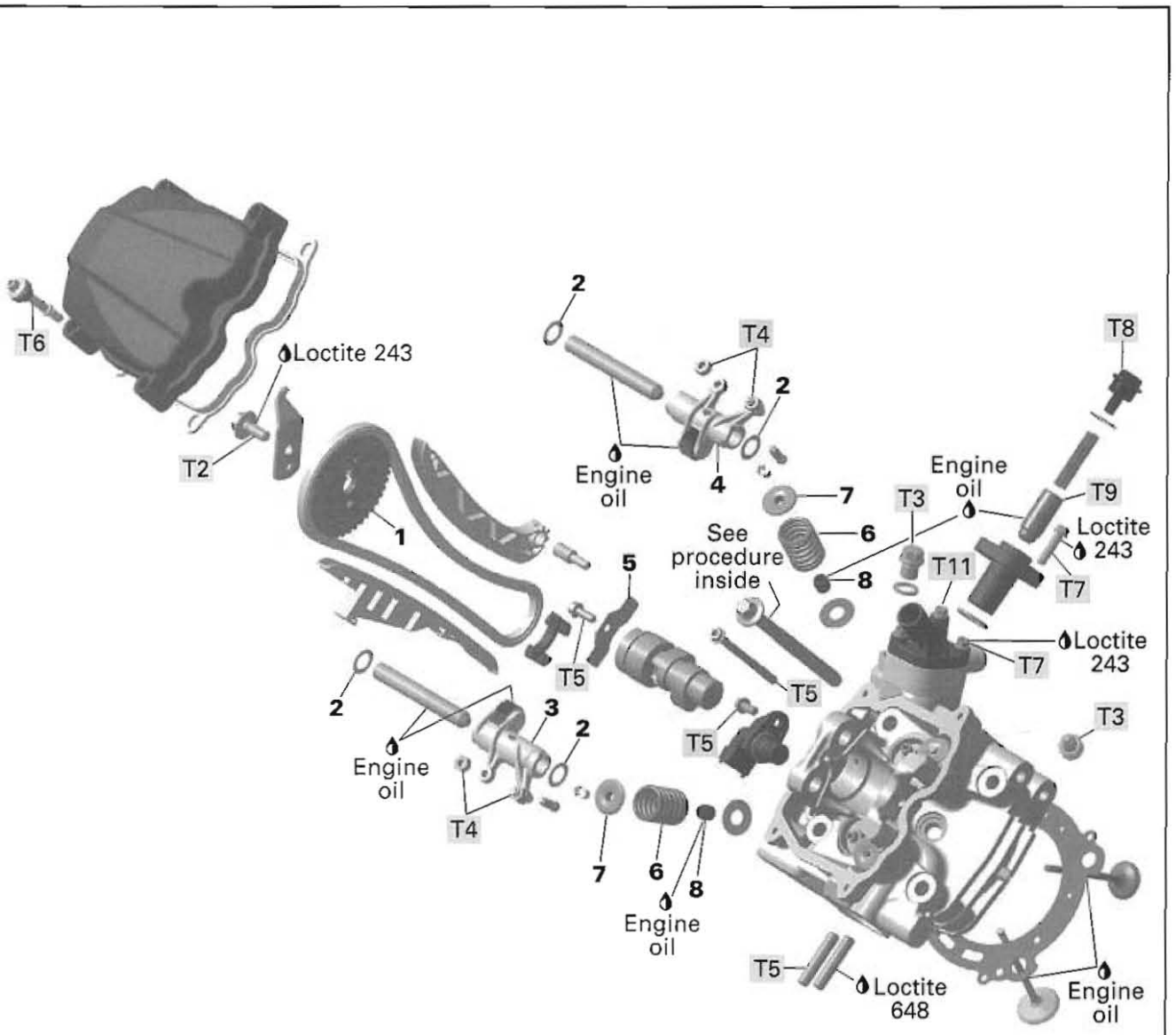

T1	60 N•m (44 lbf•ft)
T2	30 N•m (22 lbf•ft)
T3	20 N•m (15 lbf•ft)
T4	12 N•m (106 lbf•**in**)
T5	10 N•m (89 lbf•**in**)
T6	7 N•m (62 lbf•**in**)

T7	6 N•m (53 lbf•**in**)
T8	4.5 N•m (40 lbf•**in**)
T9	0.1 N•m (0.89 lbf•**in**)
T10	16 N•m (141 lbf•**in**)
T11	5 N•m (44 lbf•**in**)

vmr2007-036-001_a

www.midwestmanuals.com

CYLINDER HEAD NO. 2

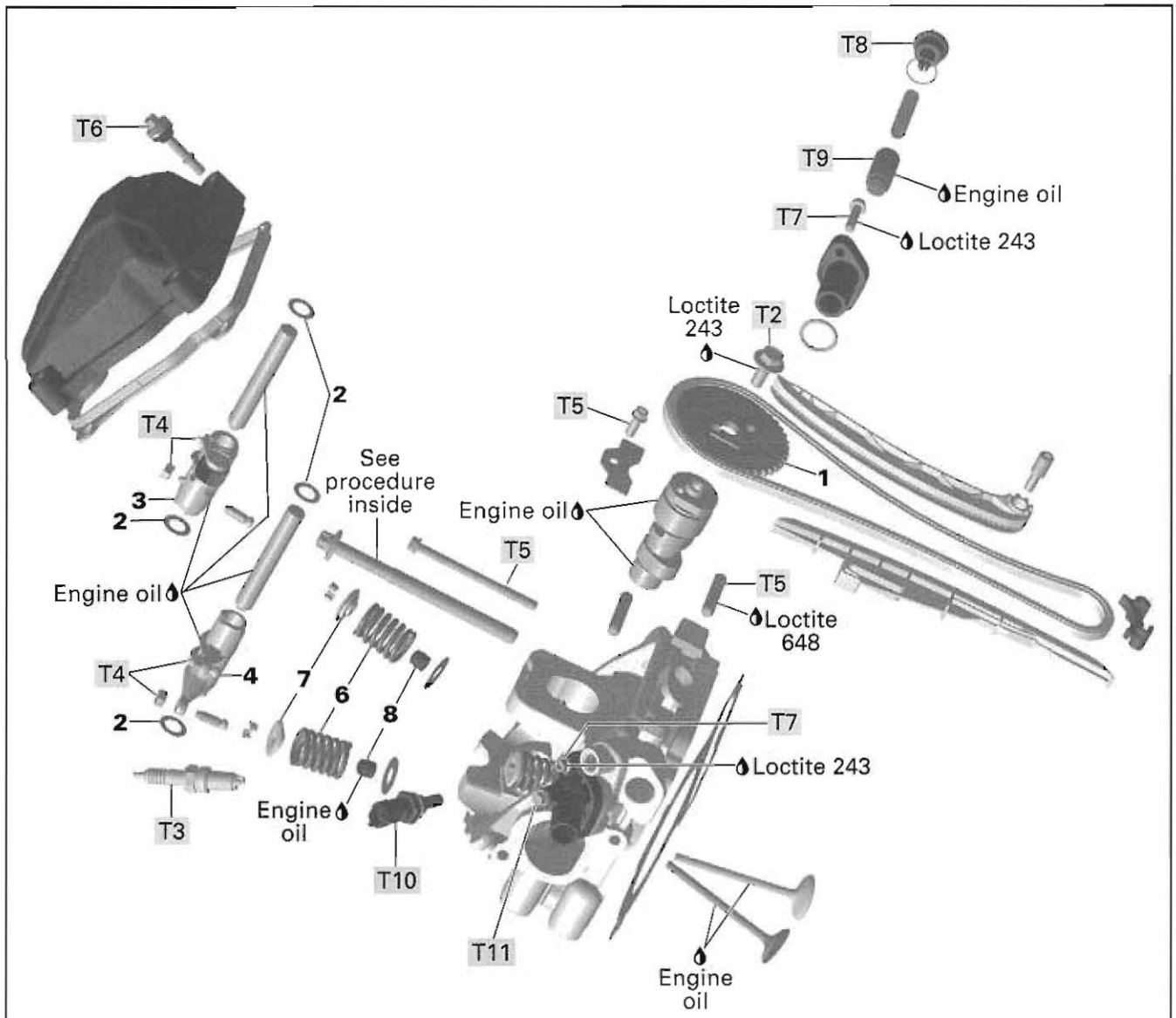

T1	60 N•m (44 lbf•ft)
T2	30 N•m (22 lbf•ft)
T3	20 N•m (15 lbf•ft)
T4	12 N•m (106 lbf•**in**)
T5	10 N•m (89 lbf•**in**)
T6	7 N•m (62 lbf•**in**)

T7	6 N•m (53 lbf•**in**)
T8	4.5 N•m (40 lbf•**in**)
T9	0.1 N•m (0.89 lbf•**in**)
T10	16 N•m (141 lbf•**in**)
T11	5 N•m (44 lbf•**in**)

vmr2007-036-002_a

www.midwestmanuals.com

CYLINDERS AND PISTONS

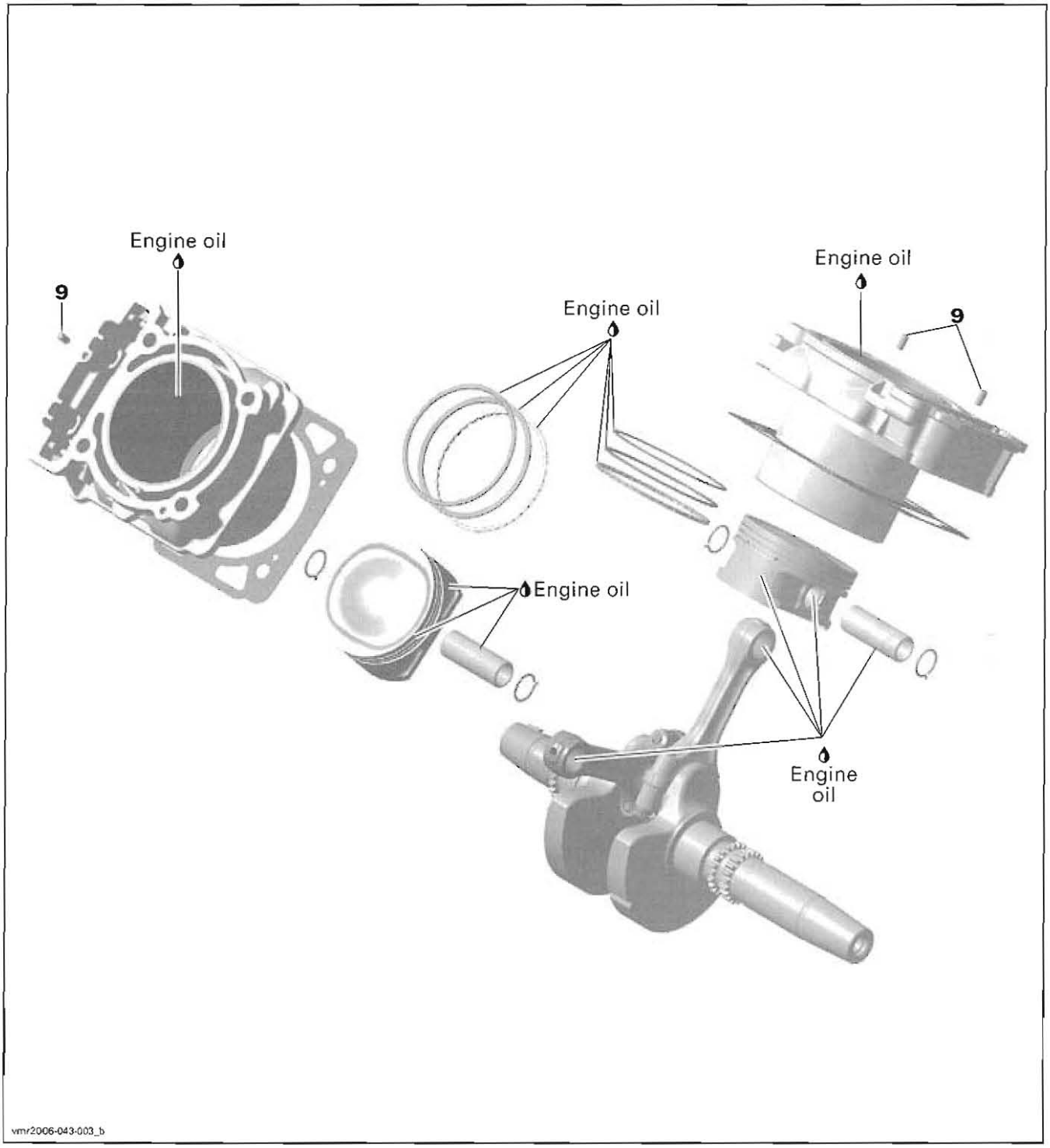

www.midwestmanuals.com

GENERAL

Refer to the *2008 SHOP MANUAL* (P/N 219 100 273) for topics not covered in this section.

PROCEDURES

CAMSHAFT

Camshaft Inspection

V490	
CAMSHAFT LOBE (EXHAUST)	
NEW	31.730 - 31.930 mm (1.2492 - 1.2571 in)
SERVICE LIMIT	31.710 mm (1.2484 in)
CAMSHAFT LOBE (INTAKE)	
NEW	31.830 - 32.030 mm (1.2531 - 1.2610 in)
SERVICE LIMIT	31.810 mm (1.2524 in)

V660	
CAMSHAFT LOBE (EXHAUST)	
NEW	31.940 - 32.140 mm (1.2575 - 1.2654 in)
SERVICE LIMIT	31.920 mm (1.2567 in)
CAMSHAFT LOBE (INTAKE)	
NEW	32.110 - 32.310 mm (1.2642 - 1.2721 in)
SERVICE LIMIT	32.090 mm (1.2634 in)

V810	
CAMSHAFT LOBE (EXHAUST)	
NEW	32.950 - 33.150 mm (1.2972- 1.3051 in)
SERVICE LIMIT	32.930 mm (1.2965 in)
CAMSHAFT LOBE (INTAKE)	
NEW	32.890 - 33.090 mm (1.2949 - 1.3028 in)
SERVICE LIMIT	32.870 mm (1.2941 in)

www.midwestmanuals.com

www.midwestmanuals.com

GEARBOX AND 4X4 COUPLING UNIT

SERVICE PRODUCTS

Description	Part Number	Page
LOCTITE 5910	293 800 081	14–15

GEARBOX COMPONENTS AND 4X4 COUPLING MECHANISM

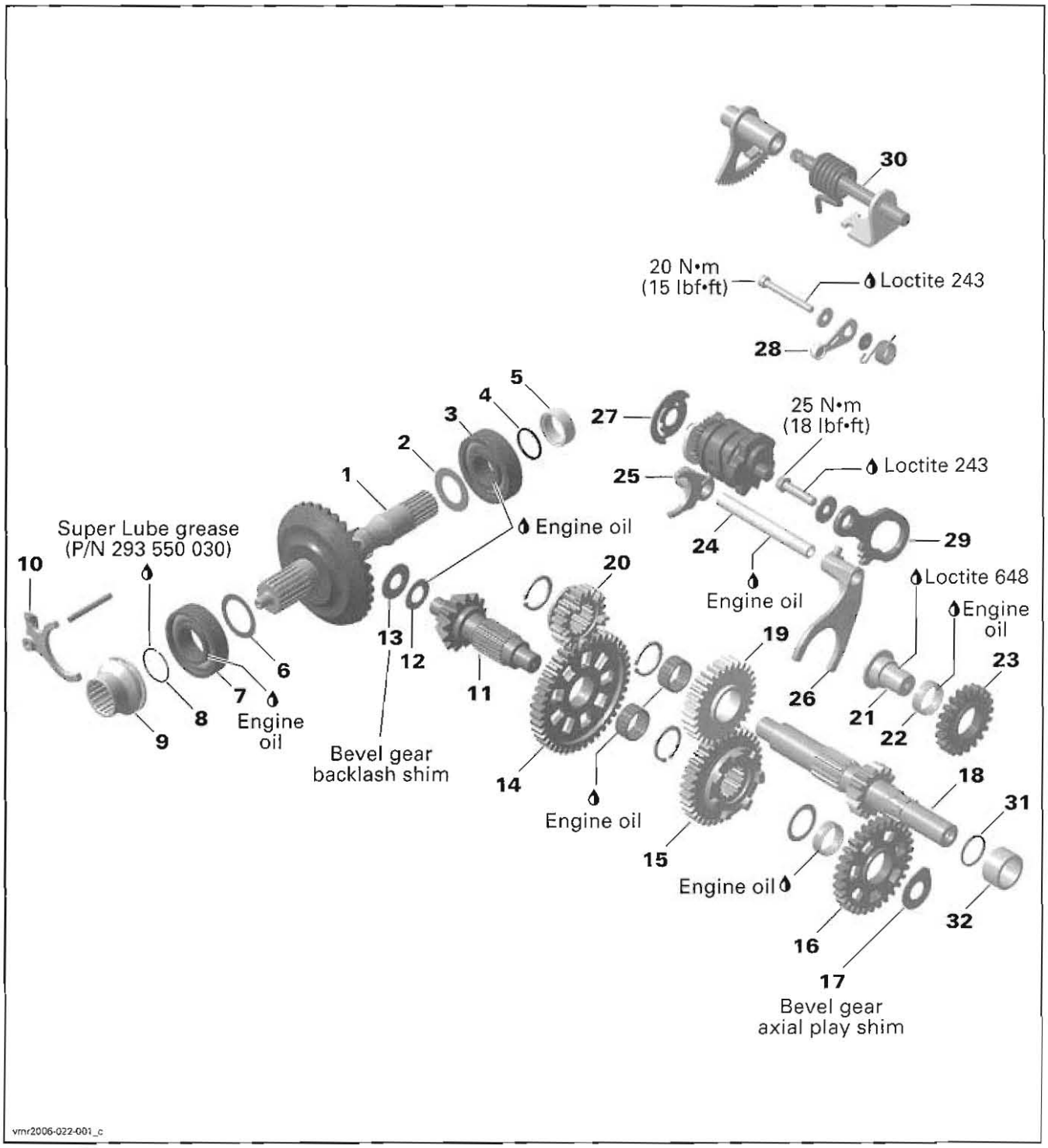

www.midwestmanuals.com

GEARBOX HOUSING AND 4X4 ACTUATOR UNIT

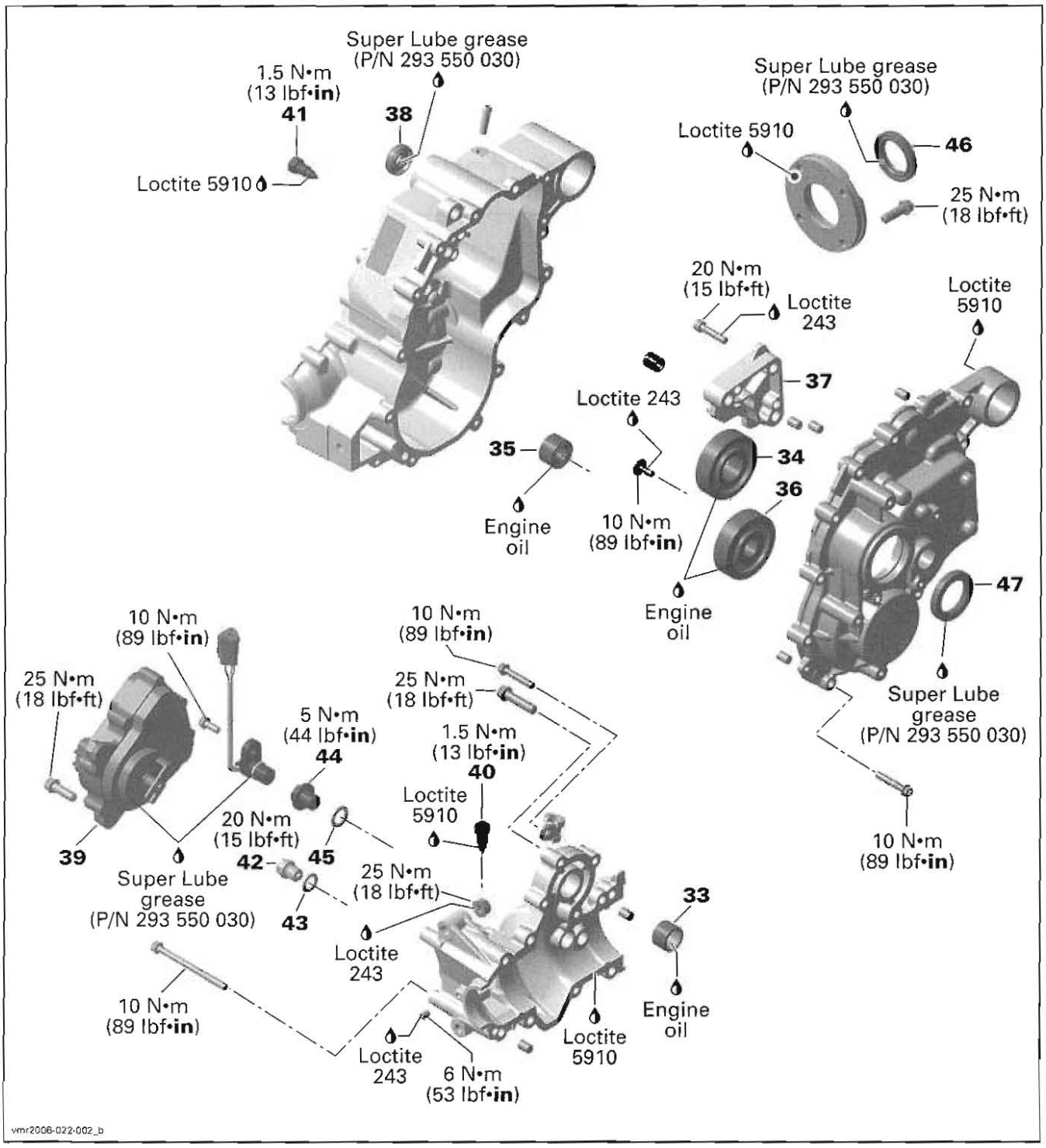

www.midwestmanuals.com

GENERAL

Refer to the *2008 SHOP MANUAL* (P/N 219 100 273) for topics not covered in this section.

PROCEDURES

GEARBOX POSITION INDICATOR SWITCHES

NOTE: The gearbox removal is not necessary to reach the gearbox position indicator switches.

Indicator Switches Removal

Outlander 500/650 and Renegade 500

To reach the gearbox position indicator switches no. 41, remove the rear engine cover.

Remove screw retaining indicator switch wire.

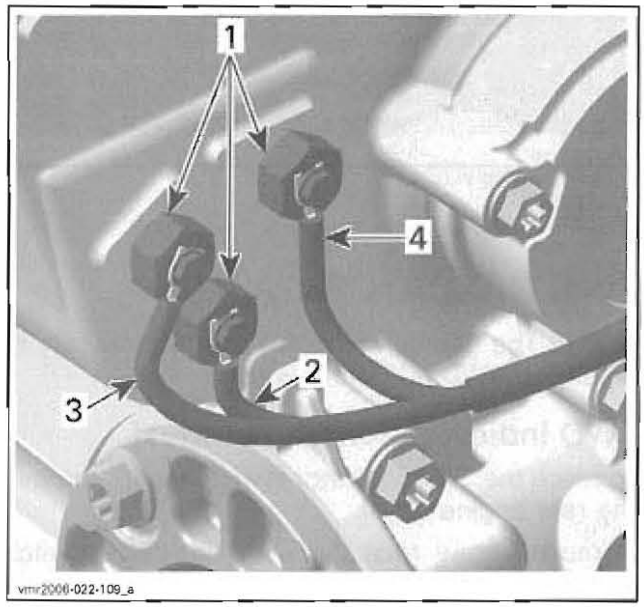

1. *Gearbox position indicator switches*
2. *BROWN/GREY wire*
3. *WHITE/GREY wire*
4. *ORANGE/GREY wire*

Unscrew switch.

Outlander 800R

To reach the gearbox position indicator switches no. 41, remove the rear engine cover.

Remove and discard Oetiker clamp retaining indicator switch connector to the indicator switch.

Unplug indicator switch connector.

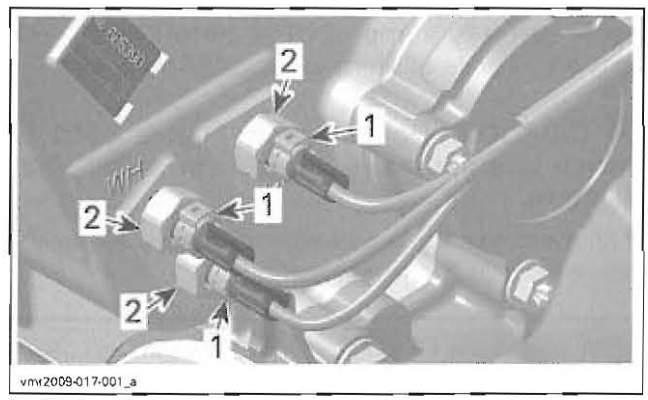

1. *Oetiker clamps*
2. *Gearbox position indicator switches*

Unscrew switch.

Indicator Switches Test

Check if gearbox position indicator switches work properly as per following procedure:

Disconnect wires from switches.

NOTE: Remove insulating paint to obtain correct readings.

Put gearbox in park, reverse, neutral, high and low position.

Use a multimeter to measure the resistance from the indicator switch to engine ground. Compare results with the logic table below.

SHIFTER POSITION	CORRESPONDING SWITCH WIRES		
	BROWN/ GREY	WHITE/ GREY	ORANGE/ GREY
L	X		X
H			X
N		X	X
R		X	
P	X	X	

An "X" indicates switch is making ground contact, thus there should be continuity (R is close to 0 ohms).

A blank space indicates switch is not making contact, there should be no continuity (R = infinite).

If the indicator switch is good, check the vehicle harness and/or indicator lights.

Indicator Switches Installation

Outlander 500/650 and Renegade 500

For installation, reverse the removal procedure. Pay attention to the following details.

Take care do not damage shifting indicator switches threads during installation.

www.midwestmanuals.com

Apply carefully some LOCTITE 5910 (P/N 293 800 081) on threads of shifting indicator switches.

⚠ **CAUTION** Do not apply Loctite 5910 on switch plunger, as it will lead to switch malfunction.

If all switches are removed, make sure to put the wires back in the right location.

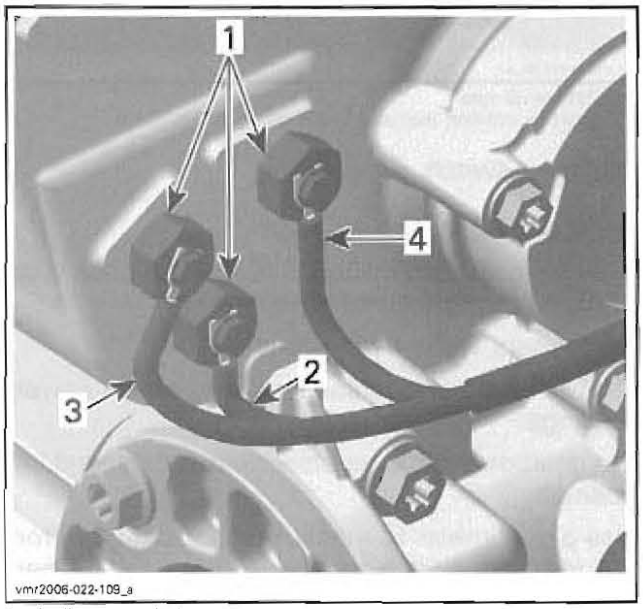

1. *Indicator switches*
2. *BROWN/GREY wire*
3. *WHITE/GREY wire*
4. *ORANGE/GREY wire*

Spray a layer of electrical insulating paint or varnish over switches to prevent shorts and corrosion.



Outlander 800R

For installation, reverse the removal procedure. Pay attention to the following details.

Take care do not damage shifting indicator switches threads during installation.

Apply carefully some LOCTITE 5910 (P/N 293 800 081) on threads of shifting indicator switches.

⚠ **CAUTION** Do not apply Loctite 5910 on switch plunger, as it will lead to switch malfunction.

If all switches are removed, make sure to put the wires back in the right location.

Secure connectors with NEW Oetiker clamps.

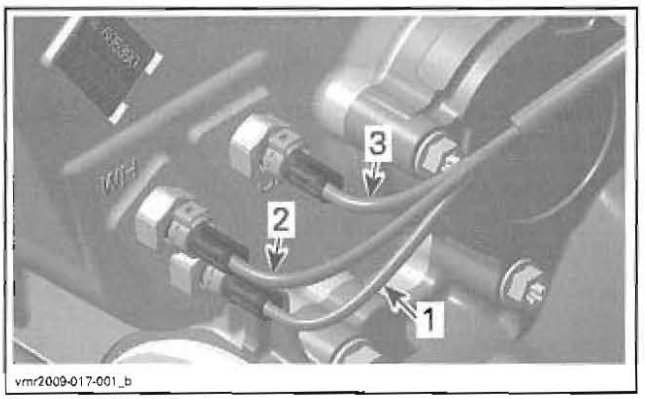

1. *BROWN/GREY wire*
2. *WHITE/GREY wire*
3. *ORANGE/GREY wire*

4WD INDICATOR SWITCH

NOTE: The gearbox removal is not necessary to reach the 4WD indicator switch.

4WD Indicator Switch Removal

To reach the 4WD indicator switch no. 40, remove the rear engine cover.

Remove screw retaining 4WD indicator switch wire.

www.midwestmanuals.com

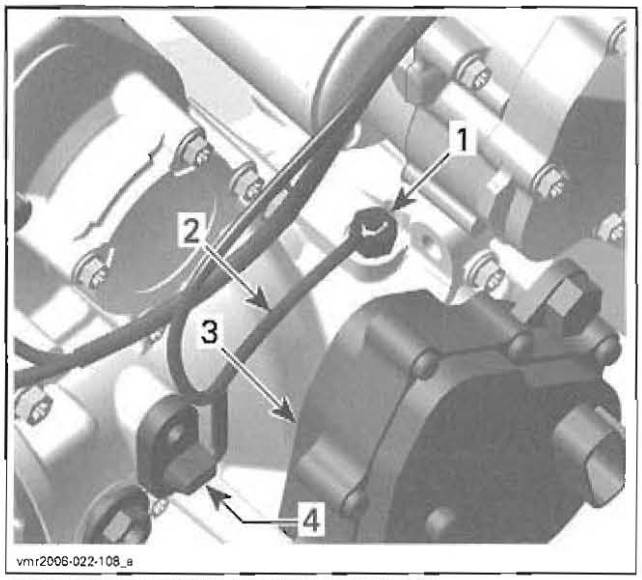

OUTLANDER 500/650 AND RENEGADE 500
1. *4 WD indicator switch*
2. *BLACK/YELLOW wire for contact to 4WD*
3. *Actuator*
4. *Speed sensor*

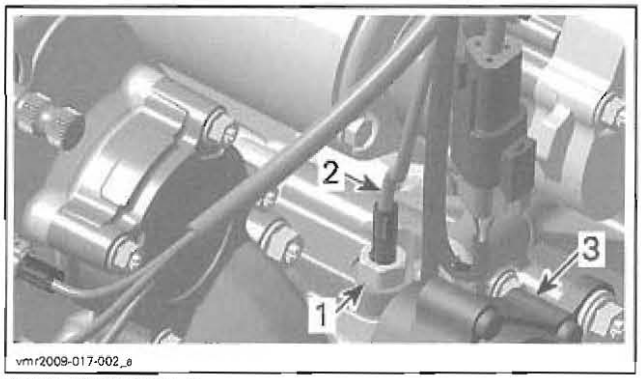

OUTLANDER 800 R
1. *4 WD indicator switch*
2. *BLACK/YELLOW wire for contact to 4WD*
3. *Actuator*

4WD Indicator Switch Test

Measure switch resistance as follows.

SWITCH POSITION	SWITCH WIRE		RESISTANCE
2WD	BLACK/ YELLOW	Engine ground	Infinite (OL)

If the resistance is out of specification, replace the 4WD indicator switch.

4WD Indicator Switch Installation

For installation, reverse the removal procedure. Pay attention to the following details.

Take care do not damage indicator switch threads during installation.

Apply carefully some LOCTITE 5910 (P/N 293 800 081) on threads of indicator switch.

⚠ CAUTION Do not apply Loctite 5910 on switch plunger, as it will lead to switch malfunction.

Spray a layer of electrical insulating paint or varnish over switch to prevent shorts and corrosion (Outlander 500/650 and Renegade 500).

www.midwestmanuals.com

www.midwestmanuals.com

ADJUSTMENT AND REPAIR PROCEDURES

GENERAL

Refer to the *2008 SHOP MANUAL* (P/N 219 100 273) for topics not covered in this section.

PROCEDURES

FUEL INJECTOR

Resistance Test

Disconnect the connector "A" from the ECM and the engine connector.

Using a multimeter, check resistance value between terminals as follows.

INJECTOR	ENGINE CONNECTOR PIN	ECM CONNECTOR "A"	RESISTANCE @ 20°C (68°F)
500/650			
FRONT	3	A-15	13.8 - 15.2 Ω
REAR		A-33	
800R			
FRONT	3	A-15	11.4 - 12.6 Ω
REAR		A-33	

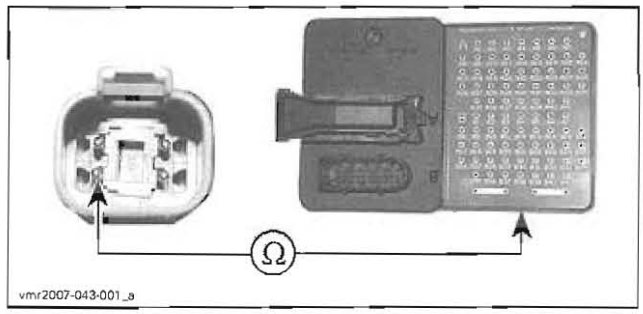

If resistance value is incorrect, remove injector connector and check resistance value between injector pins as follows.

INJECTOR	INJECTOR PIN		RESISTANCE @ 20°C (68°F)
500/650			
FRONT	1	2	13.8 - 15.2 Ω
REAR			
800R			
FRONT	1	2	11.4 - 12.6 Ω
REAR			

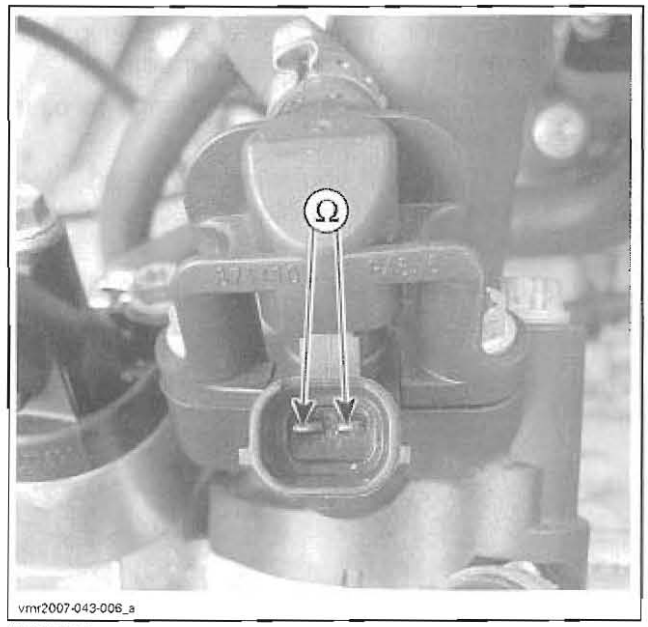

TYPICAL

If readings are out of specifications, replace injector.

If readings are good, repair/replace wiring going to injector.

Fuel Injector Removal

Before removing the injector, the fuel rail has to be removed from the engine. Refer to *FUEL RAIL* for the procedure.

NOTE: The bottom O-ring of the fuel injector is different between the 800R engine and 500/650 engines.

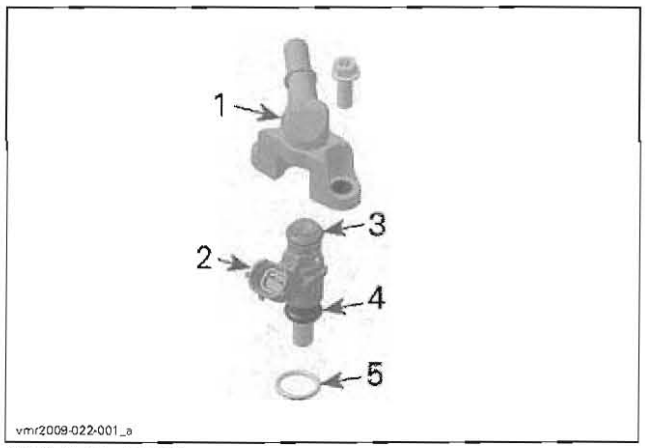

FUEL RAIL ASS'Y
1. *Fuel rail*
2. *Fuel injector*
3. *Injector top O-ring*
4. *Injector bottom O-ring*
5. *Manifold O-ring*

www.midwestmanuals.com

The fuel injector can be easily pulled out of the fuel rail.

Fuel Injector Installation

For the installation, reverse the removal procedure. Pay attention to the following details.

Apply a thin film of engine oil to O-rings to ease insertion in rail.

Install new O-rings, if you reinstall a used injector then insert the fuel injector in place with your hand. Do not use any tool.

Position the manifold O-ring as shown on injector.

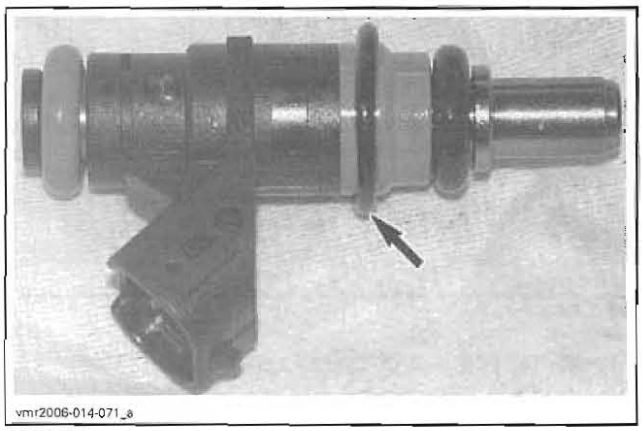

TYPICAL

Carefully insert injector in manifold paying attention to the manifold O-ring. Gently push in evenly all around while inserting injector. O-ring must be completely inserted and not visible, before finishing pushing injector.

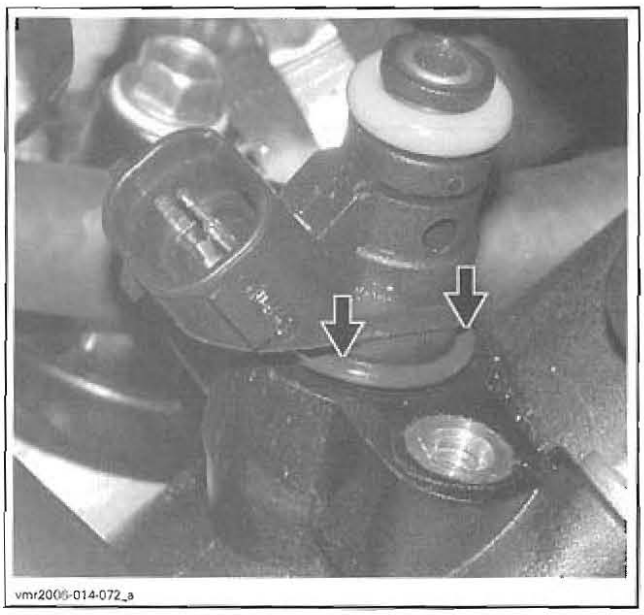

Firmly push injector until it bottoms.

Reinstall fuel rail. See above.

THROTTLE CABLE

Throttle Cable Adjustment

Throttle Cable Free-Play

Throttle cable routing must be correct.

1. Remove the throttle cam cover on throttle body.
2. Activate throttle lever a few times and release.
3. Make sure throttle cam of throttle body rests against the set screw without any tension or excessive free play on the cable.
   - 3.1 If cam rests against the set screw with a 2 mm (.078 in) cable free-play, go to *THROTTLE LEVER STOPPER SCREW SETTING*.
   - 3.2 If cam does not rest against the set screw or there is tension on the cable, adjust cable free-play as follows.

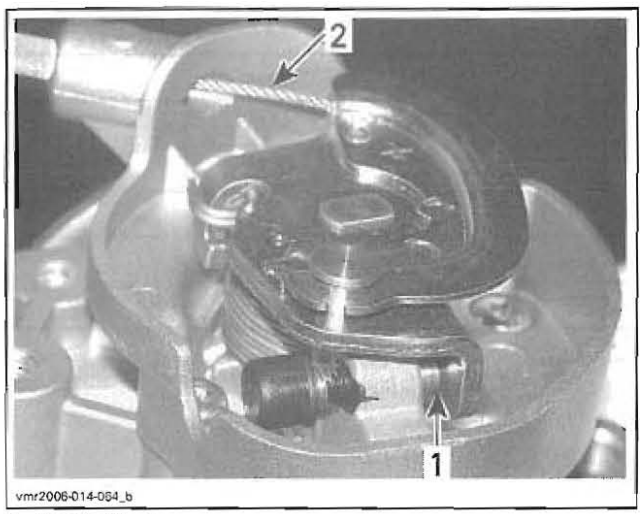

1. *Contact here*
2. *Free-play here*

NOTICE Improper cable adjustment will cause strain on the cable or cause damage to the cable bracket or throttle lever.

⚠ WARNING

Make sure throttle cam contacts the set screw when throttle lever is fully released at handlebar.

4. Pull the cable protector to expose cable adjuster.
5. Loosen the lock nut.
6. Turn cable adjuster in order to get a 2 mm (.078 in) cable free-play at throttle cam.

www.midwestmanuals.com

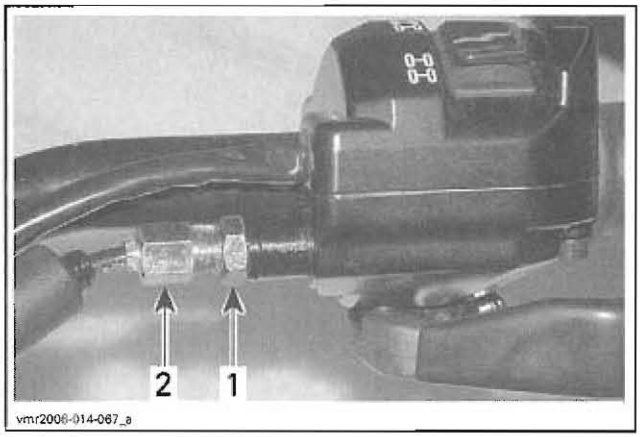

1. Lock nut
2. Cable adjuster

7. Keep the cable adjuster from turning and tighten lock nut. Slide the cable protector over adjuster.
8. Turn handlebar side to side and ensure there is still free-play in each position.
9. Install throttle cam cover.
10. Go to *THROTTLE LEVER STOPPER SCREW SETTING.*

Throttle Lever Stopper Screw Setting

1. Loosen the stopper screw lock nut.
2. Fully depress throttle lever (wide open position) and hold.
3. Loosen stopper screw until it just releases throttle lever.

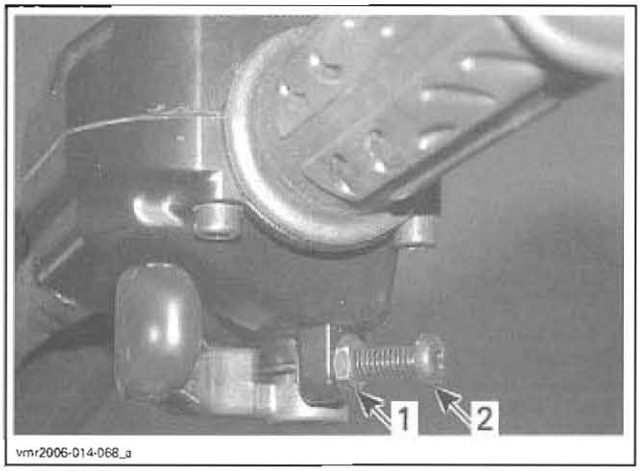

1. Lock nut
2. Stopper screw

4. Turn stopper screw clockwise until it contacts throttle lever again.
5. From this point, tighten stopper screw 1/2 turn.
6. Keep stopper screw from turning and tighten the lock nut.

7. Using B.U.D.S., verify throttle plate opening.
   7.1 Select **Setting** tab. The display shows the actual throttle opening in degrees.

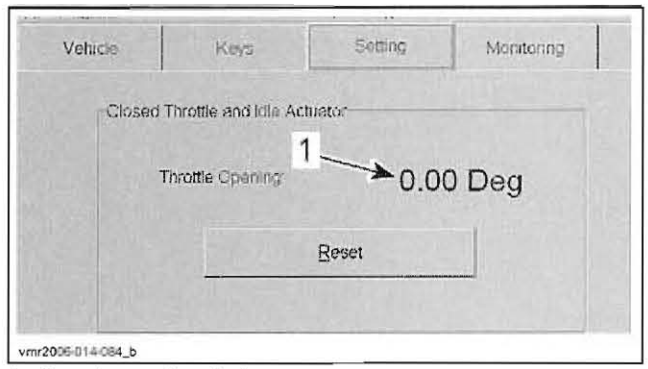

1. Throttle opening display

NOTE: Do not click on the **Reset** button.

8. Fully depress throttle lever (wide open position) and hold.
9. Read throttle opening. It should be within the following specification.

THROTTLE OPENING
82° to 86°

www.midwestmanuals.com

www.midwestmanuals.com

FUEL TANK AND FUEL PUMP

SERVICE TOOLS

Description	Part Number	Page
OETIKER PLIERS	295 000 070	27
SMALL HOSE PINCHER	295 000 076	24
ECM ADAPTER	420 277 010	33
VACUUM/PRESSURE PUMP	529 021 800	24
PRESSURE GAUGE	529 035 709	26
FLUKE 115 MULTIMETER	529 035 868	32
T-FITTING	529 036 023	26

SERVICE TOOLS – OTHER SUPPLIER

Description	Part Number	Page
FLUKE RIGID BACK PROBE	TP88	32

SERVICE PRODUCTS

Description	Part Number	Page
FUEL PUMP NUT TOOL	529 035 899	35

Midwest Manuals
sales@midwestmanuals.com
www.midwestmanuals.com

www.midwestmanuals.com

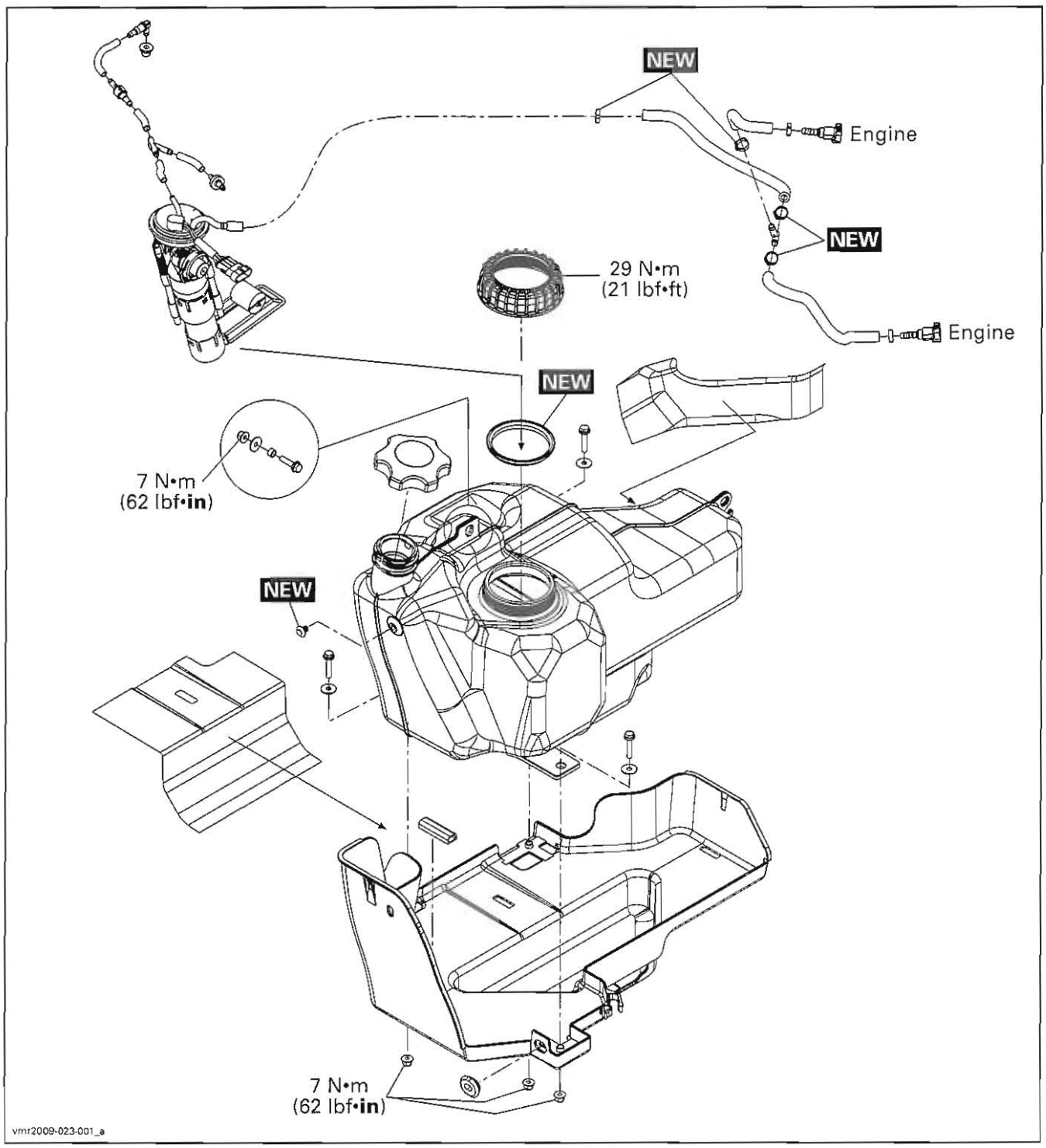

www.midwestmanuals.com

GENERAL

⚠ WARNING

Fuel is flammable and explosive under certain conditions. Ensure work area is well ventilated. Do not smoke or allow open flames or sparks in the vicinity.

⚠ WARNING

Always disconnect battery prior to working on the fuel system. Always disconnect battery exactly in the specified order, BLACK (-) cable first.

Whenever working on fuel system, always verify for water or dust infiltration in reservoir.

During assembly/installation, use the torque values and service products as in the exploded views.

Clean threads before applying a threadlocker. Refer to *SELF-LOCKING FASTENERS* and *LOCTITE APPLICATION* at the beginning of this manual for complete procedure.

⚠ WARNING

Torque wrench tightening specifications must be strictly adhered to. Locking devices (e.g.: locking tabs, elastic stop nuts, self-locking fasteners, cotter pin, etc.) must be replaced with new ones.

Hoses or cables removed or disconnected must be installed and routed at the same place.

⚠ CAUTION Locking ties removed during a procedure must be replaced and installed at the same location.

⚠ WARNING

Fuel lines remain under pressure at all times. Always proceed with caution and use appropriate safety equipment when working on pressurized fuel system. Always wear safety glasses.

Proceed with care when removing/installing pressure test equipment or disconnecting fuel line connections.

Slowly disconnect the fuel hose to minimize spilling. Cover the fuel line connection with an absorbent shop rag. Wipe off any fuel spillage.

⚠ WARNING

Do not allow fuel to spill on hot engine parts or electrical connectors. The evaporating fuel on the hot components or on the electrical connectors produce highly inflammable fuel vapors that can easily be ignited by the heat, a spark, electrostatic discharge or stray current resulting in a fire or an explosion.

Never use a hose pincher on injection system high pressure hoses.

Replace any damaged or deteriorated fuel lines.

When the repair is complete, ensure that all hoses are connected and secured. The fuel pump is activated each time electrical power is turned on. A pressure test must be carried out before turning the ignition key to ON and setting the engine run/stop switch to RUN.

⚠ WARNING

Always carry out a fuel pump pressure test and/or a fuel tank leak test whenever a related fuel system component has been removed during a maintenance procedure. A missed fuel leak could result in severe injury or death.

After performing a fuel pressure test, use the valve on the fuel pressure gauge to release the pressure (if so equipped).

SYSTEM DESCRIPTION

Fuel Tank Vent System

The fuel tank is equipped with a vent system that provides over pressure relief and negative pressure relief of the fuel tank.

Air can enter the fuel tank at all times through the vent system INLET check valve. This prevents negative pressure within the fuel tank which could cause fuel starvation.

www.midwestmanuals.com

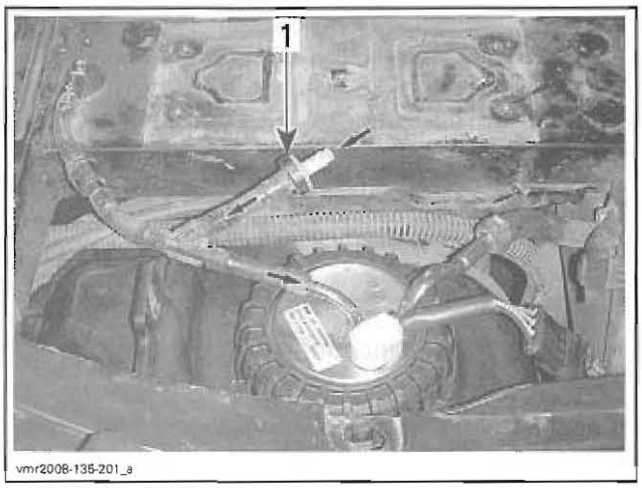

1. Vent inlet check valve

The vent inlet check valve also prevents fuel from flowing out through the inlet of the vent system.

If the pressure in the fuel tank builds up and exceeds 2.5 - 7.6 kPa (.36 - 1.1 PSI), the pressure relief valve opens and lets the excess pressure evacuate through the vent system OUTLET.

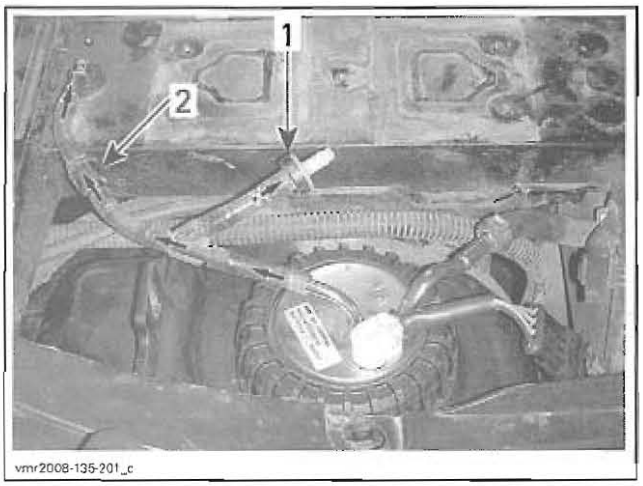

1. Inlet check valve blocks fuel
2. Outlet pressure relief valve allows pressure to go out

INSPECTION

FUEL TANK LEAK TEST

⚠ WARNING

Always carry out a fuel tank leak test whenever fuel tank shows signs of wear or damage which may cause a leak, or when the fuel pump has been removed or replaced, or if you suspect a leak. If damage is severe, fuel tank should be replaced even if no leak is present. Do not attempt to repair a plastic fuel tank.

Refill fuel tank.

Remove seat.

All Models except Outlander MAX

Remove the seat reinforcement plate.

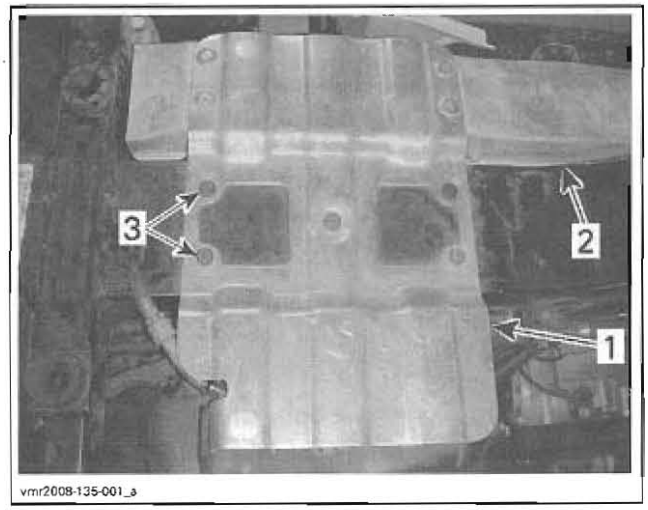

TYPICAL
1. Seat reinforcement plate
2. Exhaust heat shield
3. Retaining screws (5)

All Models

Install a SMALL HOSE PINCHER (P/N 295 000 076) on vent line (OUTLET side).

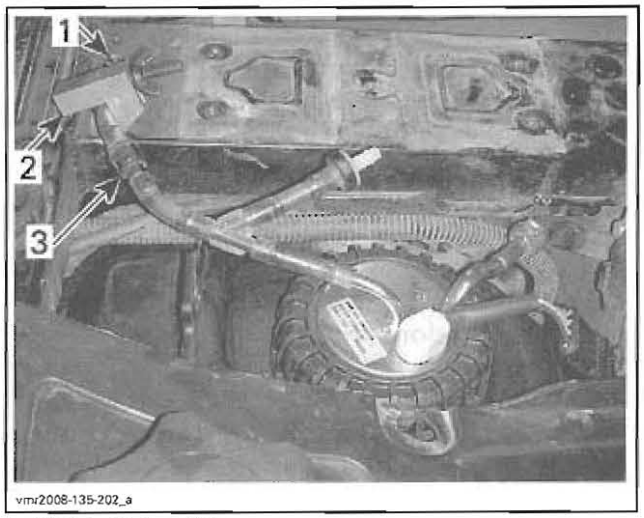

1. Vent system outlet
2. Small hose pincher
3. Vent pressure relief valve

Using the VACUUM/PRESSURE PUMP (P/N 529 021 800), pressurize fuel tank through vent line (INLET side).

www.midwestmanuals.com

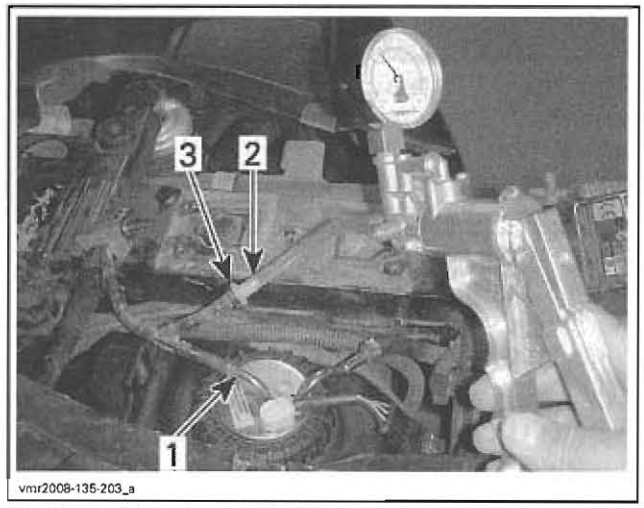

VACUUM PUMP ON INLET SIDE
1. *Fuel tank vent*
2. *Vent inlet line*
3. *Vent check valve*

Pressurize fuel tank as follows.

PRESSURE	TIME WITHOUT PRESSURE DROP
21 kPa (3 PSI)	3 minutes

If pressure drops, locate fuel leak(s) and repair or replace leaking component(s).

To locate a leak, check for a fuel smell or leaking fuel.

To ease locating leak(s), spray soapy water on all hose connections and components; bubbles will indicate the leak location(s).

Fuel Tank Check Valve and Pressure Relief Valve Test

While tank is still pressurized from the previous fuel tank leak test, carry out the following procedure:

Block the vent outlet as you remove the hose pincher.

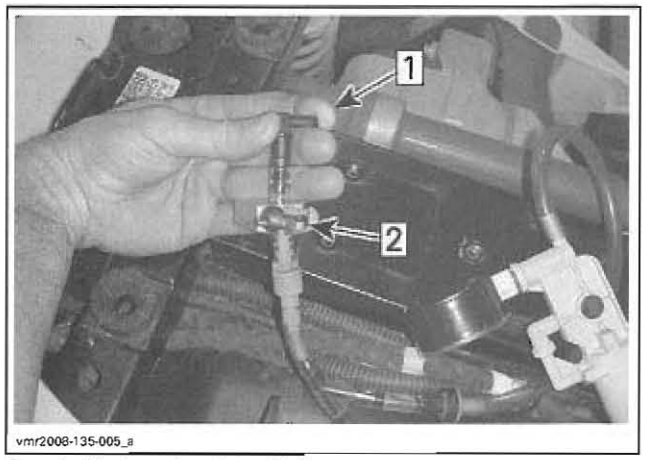

Step 1: Block vent outlet with finger
Step 2: Remove hose pincher

Alternately touch and release end of pressure relief valve. You should feel pressurized air flowing out indicating relief valve is working.

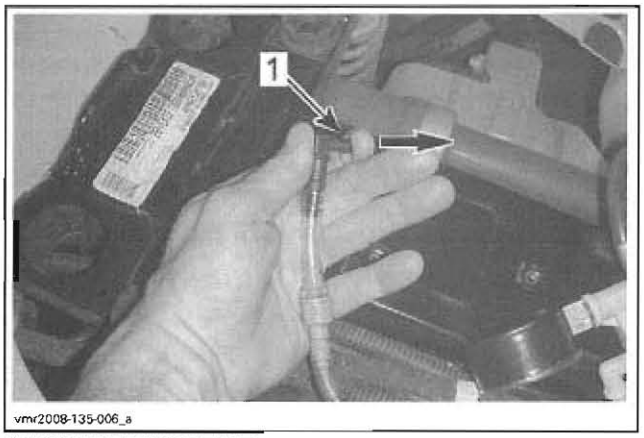

PRESSURE RELIEF TEST
1. *Release vent outlet and feel for air flowing out*

Using the pressure/vacuum pump, increase fuel tank pressure until the pressure relief valve opens.

NOTE: Pressure relief valve should open when the fuel tank pressure exceeds 2.5 - 7.6 kPa (.36 - 1.1 PSI) preventing fuel tank overpressure. This validates pressure relief valve operation.

Remove fuel tank cap.

NOTE: You should hear remaining air pressure within fuel tank escape as fuel cap seal is loosened.

Blow air in through vent inlet check valve.

NOTE: Air must flow freely through inlet check valve and out fuel tank filler neck.

www.midwestmanuals.com

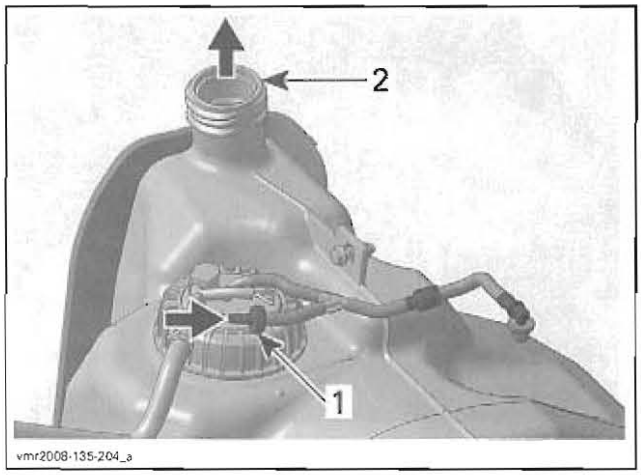

1. *Blow air through vent inlet check valve*
2. *Airflow out of filler neck*

Reinstall removed parts.

FUEL PUMP PRESSURE TEST

The pressure test will show the available pressure at the fuel pump outlet. It validates the pressure regulator, the fuel pump and tests for leaks in the system.

NOTE: Refer also to the *FUEL SYSTEM DIAGNOSTIC FLOW CHART* at the end of this section to help diagnose a fuel system related problem.

Ensure there are no leaks from hoses and fittings. Repair any leak.

Before proceeding with the pressure test ensure the battery is fully charged. Battery voltage must be over 12 volts.

Disable fuel pump using B.U.D.S. Look in the Activation tab and select Disabled.

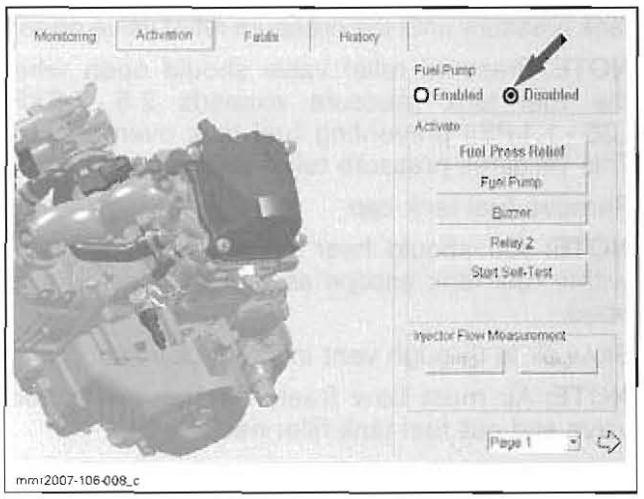

Release fuel pressure by running engine until it runs out of gas.

⚠ WARNING

The fuel hose may be under pressure. Cover the fuel line connection with an absorbent shop rag. Slowly disconnect the fuel hose to release the pressure. Wipe off any fuel spillage inside engine compartment.

Ensure there is enough gas in fuel tank.

Remove the seat and the RH side body panel, refer to the *BODY* section.

Wrap shop rags around the fuel hose end at the injector. Unplug one injector only.

Carefully disconnect the fuel pump outlet hoses by pressing on the release tab of the quick disconnect fitting.

Install fuel PRESSURE GAUGE (P/N 529 035 709) and T-FITTING (P/N 529 036 023) between disconnected hose and injector (in-line installation).

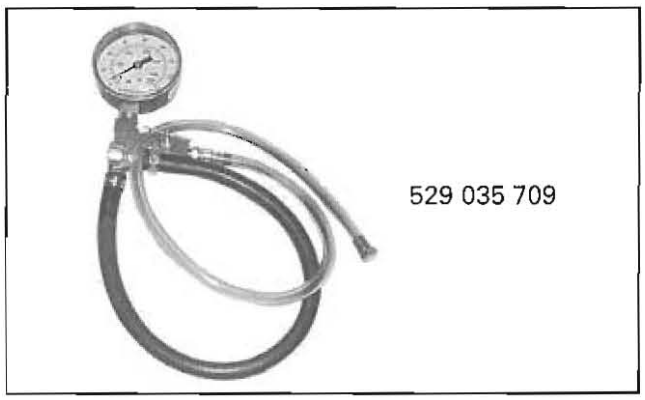

PRESSURE GAUGE

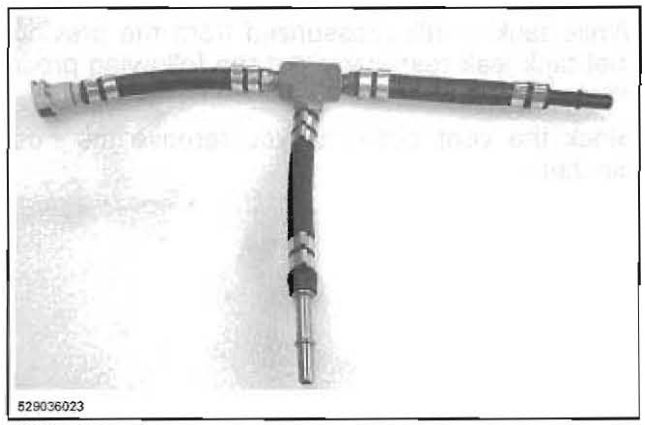

T-FITTING

Using B.U.D.S., reactivate fuel pump by selecting Enabled.

www.midwestmanuals.com

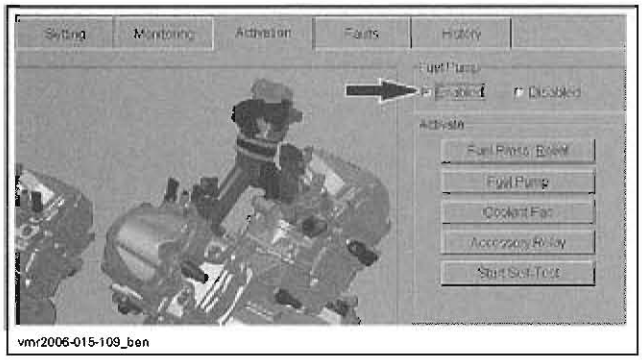

Turn ignition key ON.

Set engine stop switch to RUN and observe fuel pressure.

FUEL PRESSURE	350 kPa (51 PSI)

Turn ignition key OFF then back ON. Repeat the test.

Remove tool and connect hose on injector.

Disconnect fuel hose from the other injector and install the tool.

Repeat the pressure test.

Remove pressure gauge and T-fitting.

Reconnect fuel hose on injector.

A rapid pressure drop indicates leakage either from the fuel rail or from the fuel pump check valve.

Check fuel hoses and fittings for leaks. If it is not leaking, replace fuel pump.

A slow pressure drop indicates leakage either from the fuel injector or from the fuel pressure regulator.

Check fuel injector for leaks. If it is not leaking, replace fuel pump.

If there is no leakage, **start engine** and observe fuel pressure. The fuel pressure should be the same as above.

If pressure is within limits, fuel pump and pressure regulator are working adequately.

Release fuel pressure in the system using B.U.D.S. Look in the **Activation** tab.

⚠ WARNING

Wipe off any fuel spillage. Fuel is flammable and explosive under certain conditions. Always work in a well ventilated area.

Reinstall removed parts.

PROCEDURES

FUEL HOSE AND OETIKER CLAMPS

Fuel Hose Replacement

When replacing fuel hoses, be sure to use hoses and clamps as available from BRP parts department. This will ensure continued proper and safe operation.

⚠ WARNING

Use of fuel lines other than those recommended by BRP may compromise fuel system integrity.

⚠ WARNING

Whenever removing a hose in the fuel system, always use new Oetiker clamps at assembly. Then validate fuel system tightness by performing a fuel pressure test.

Oetiker Clamp Replacement

To secure or cut Oetiker clamps on fuel lines, use OETIKER PLIERS (P/N 295 000 070).

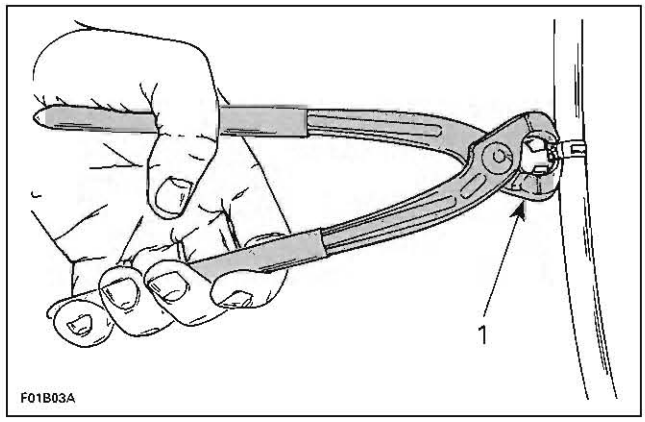

1. Cutting clamp

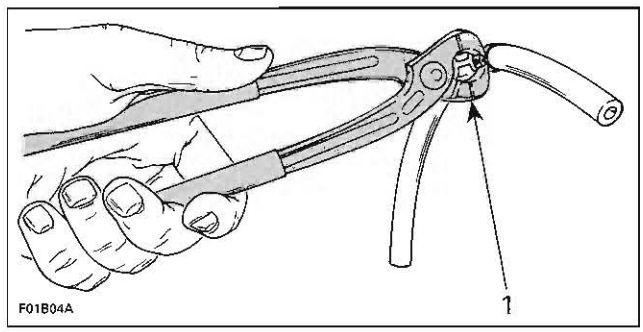

1. Securing clamp

www.midwestmanuals.com

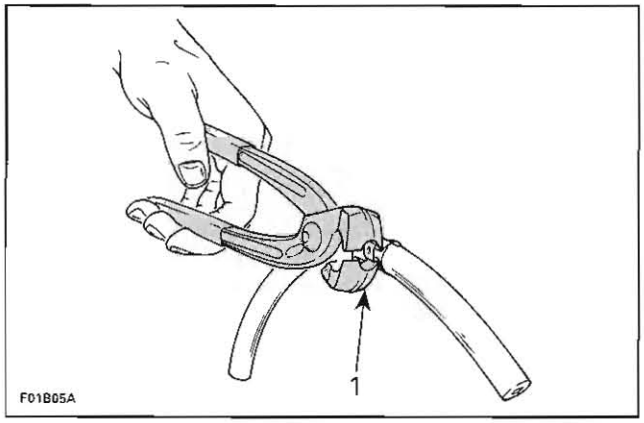

1. Securing clamp in limited access

FUEL TANK

Fuel Tank Check Valve and Pressure Relief Valve Installation

Always install check valve with the black side connected to vent line.

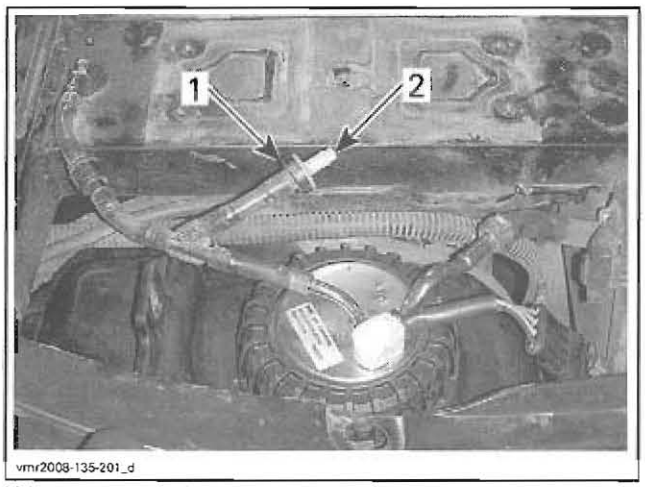

VENT INLET CHECK VALVE DIRECTION
1. Black side here
2. White side open to atmosphere

Always reinstall pressure relief valve according to arrow on valve as shown.

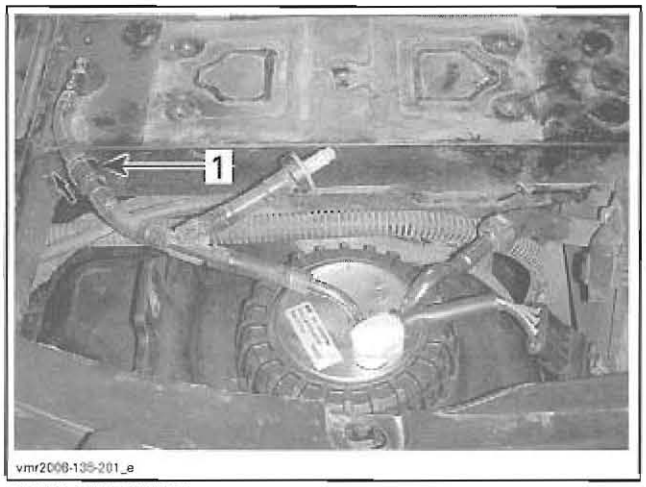

FLOW DIRECTION
1. Pressure relief valve

Fuel Tank Draining

⚠ WARNING

Never perform this operation when the engine and/or the exhaust system is/are hot. Never use a hose pincher on injection system high pressure hoses.

Remove fuel tank cap and siphon gas into an approved fuel container.

Fuel Tank Removal

Drain fuel tank. Refer to *FUEL TANK DRAINING* above in this section.

Release fuel pressure by running engine until it runs out of gas.

Disconnect battery, refer to *CHARGING SYSTEM* section.

Remove seat, refer to the *BODY* section.

All Models except Outlander MAX

Remove the seat reinforcement plate.

www.midwestmanuals.com

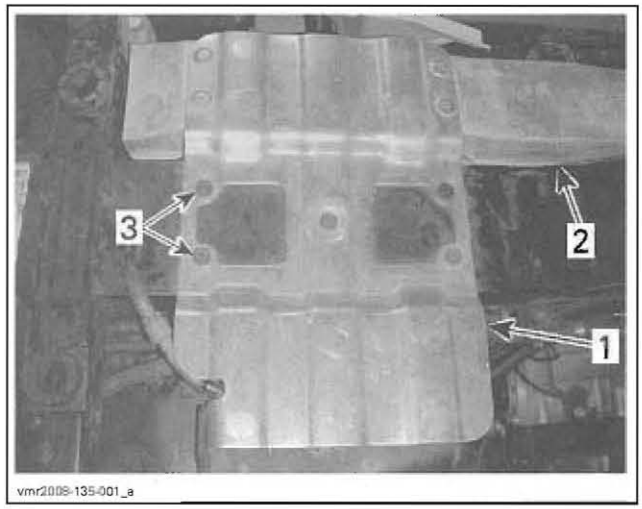

TYPICAL
1. *Seat reinforcement plate*
2. *Exhaust heat shield*
3. *Retaining screws (5)*

All Models

Remove side panels and rear fender assembly, refer to *BODY* section.

Disconnect the fuel pump connector.

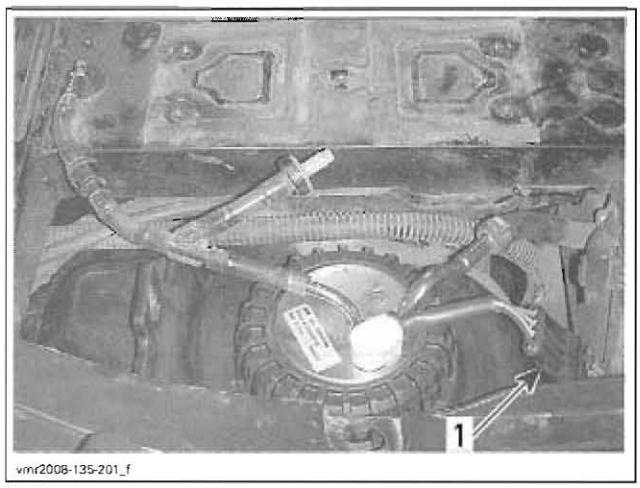

1. *Fuel pump connector*

Pull out vent system OUTLET from frame.

Disconnect fuel hose at fuel pump fitting.

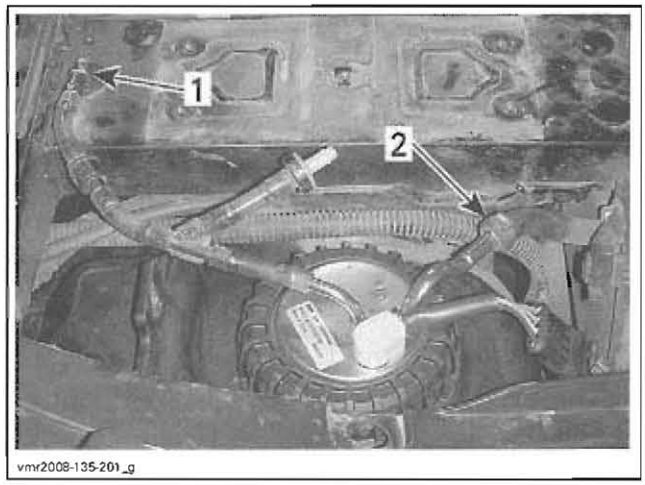

1. *Pullout vent outlet*
2. *Fuel pump fitting*

All Models except Outlander MAX

Remove 2 fuel tank retaining screws on right side of the tank.

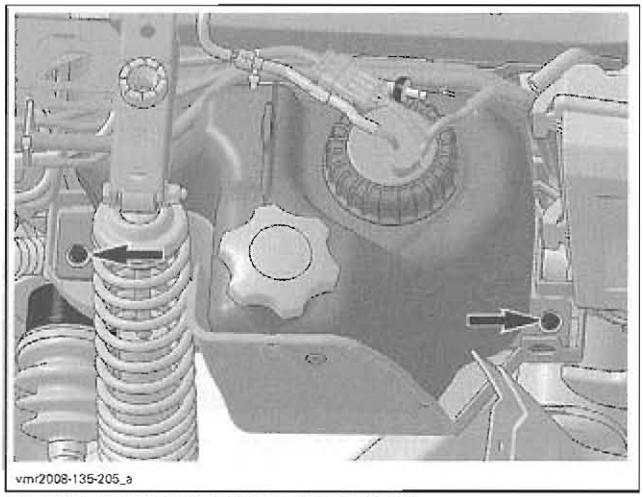

RH FUEL TANK MOUNTING SCREWS (2)

Outlander MAX Models

Remove 3 fuel tank retaining screws on right side of the tank.

www.midwestmanuals.com

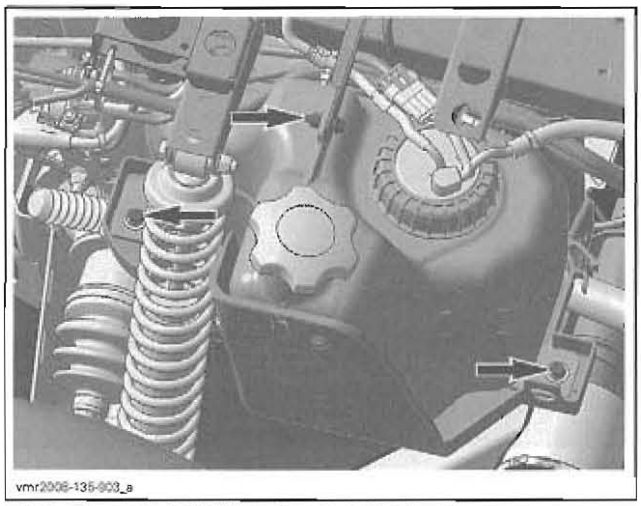

RH FUEL TANK MOUNTING SCREWS (3)

All Models

Remove the upper and the lower fuel tank retaining screws on the left side of the tank.

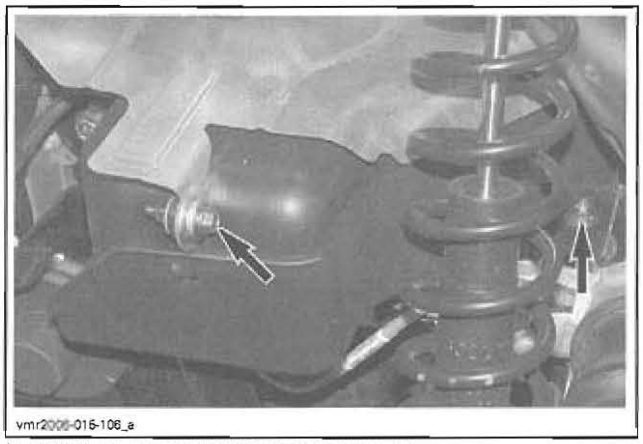

LH FUEL TANK MOUNTING SCREWS (2)

Remove voltage regulator/rectifier protector.



Lift frame sufficiently to extend RH rear shock absorber and remove its upper mounting screw.

Move shock absorber rearwards.



Pull fuel tank out from the RH side of vehicle.



Fuel Tank Protector Removal

Cut plastic rivet locking protector to tank.

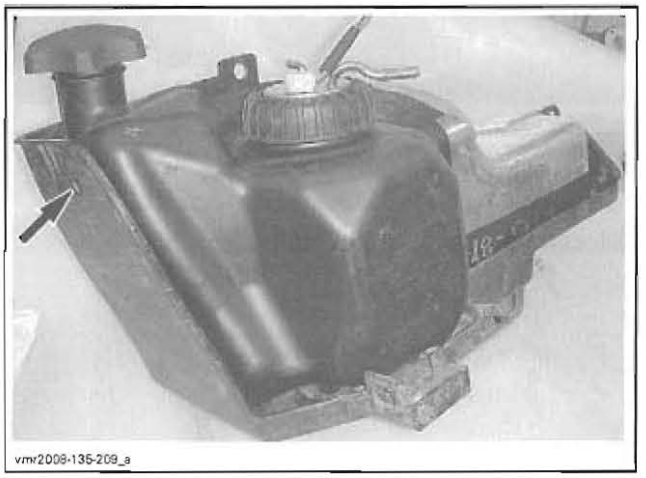

Pull out tank from protector.

Fuel Tank Inspection

Inspect fuel tank for any damages or cracks which may result in fuel leaks.

www.midwestmanuals.com

Inspect tank and protector attachment points for damages.

Inspect protector for damages.

If cracks, gouges or other damages which may lead to a fuel leak, or damages to attachment points that could prevent the tank from being secure are found, replace fuel tank.

Fuel Tank Protector Installation

For installation, use a NEW plastic rivet.

Fuel Tank Installation

The installation is the reverse of the removal procedure. However, pay attention to the following.

Make sure to properly connect and route fuel tank vent tube.

Use a NEW clamp on fuel pump hose.

All Models except Outlander MAX

Reinstall the seat reinforcement plate.

Install and torque fuel tank retaining screws to 7 N•m (62 lbf•**in**) as per following sequence.

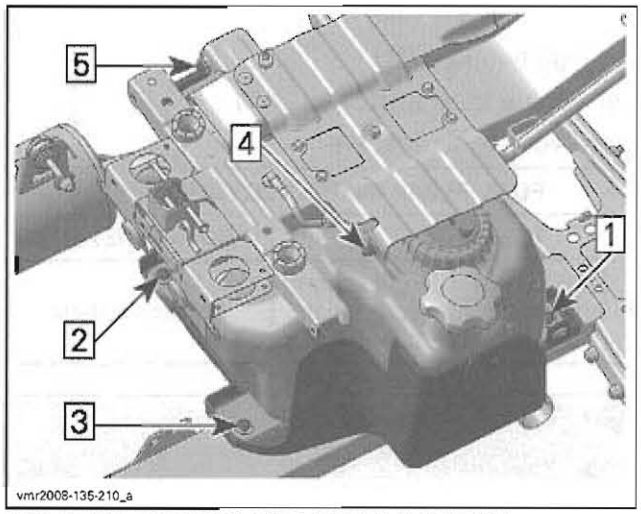

SCREW INSTALLATION AND TORQUE SEQUENCE

Outlander MAX Models

Reinstall the heat shield.

Install and torque fuel tank retaining screws to 7 N•m (62 lbf•**in**) as per following sequence.

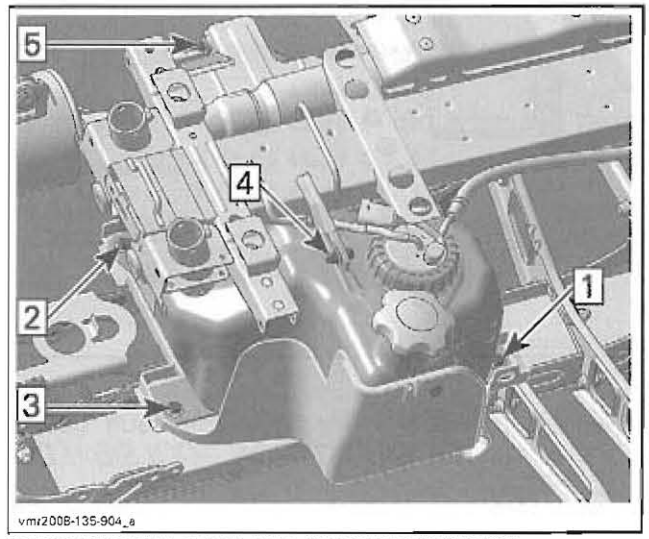

SCREW INSTALLATION AND TORQUE SEQUENCE

All Models

Refuel tank and ensure there are no leaks by performing a *FUEL TANK LEAK TEST* and a *FUEL PRESSURE TEST* as described in this section.

FUEL PUMP

Fuel Pump Quick Test

1. Set engine stop switch to RUN.
2. Turn ignition key to ON.
3. Listen to fuel pump operation.
4. Fuel pump should come ON for for a few seconds, then stop.
5. If so, the fuel pump, ECM, and associated circuits are functioning normally. However, keep in mind this does not validate fuel pump pressure.
6. Otherwise, carry out the following step(s) until the pump works.
7. Check fuel pump fuse.

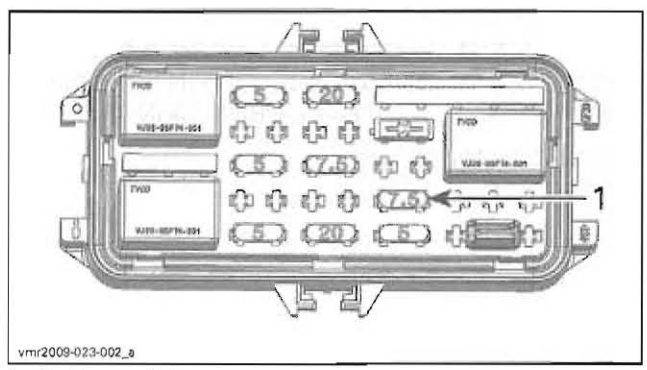

1. Fuel pump fuse

8. Substitute fuel pump relay with a known working relay in fuse box.

www.midwestmanuals.com

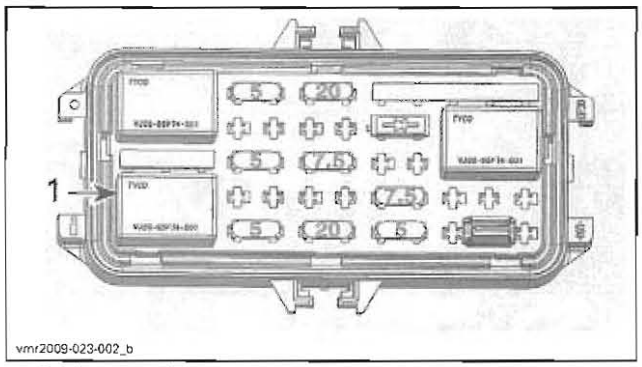

1. Fuel pump relay

9. Check in B.U.D.S. for applicable fault codes. Refer to *COMMUNICATION TOOLS/B.U.D.S. SOFTWARE* section.
10. Carry out a fuel pump input voltage test.

Set ignition switch to OFF.

Fuel Pump Input Voltage Test

Remove seat.

From the RH side of the vehicle, disconnect the fuel pump connector.

NOTE: It may be necessary to remove seat reinforcement plate and/or LH side panel to make room.



Use the FLUKE 115 MULTIMETER (P/N 529 035 868) with the FLUKE RIGID BACK PROBE (P/N TP88).

Set multimeter to Vdc.



FLUKE 115 MULTIMETER

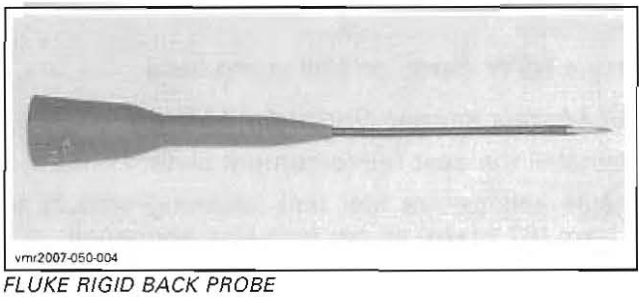

FLUKE RIGID BACK PROBE

Turn ignition key ON.

Set engine stop switch to RUN.

Read voltage as follows.

FUEL PUMP INPUT VOLTAGE TEST		
TEST PROBES		VOLTAGE READING
Fuel pump connector Pin 3	Fuel pump connector Pin 4	Battery voltage

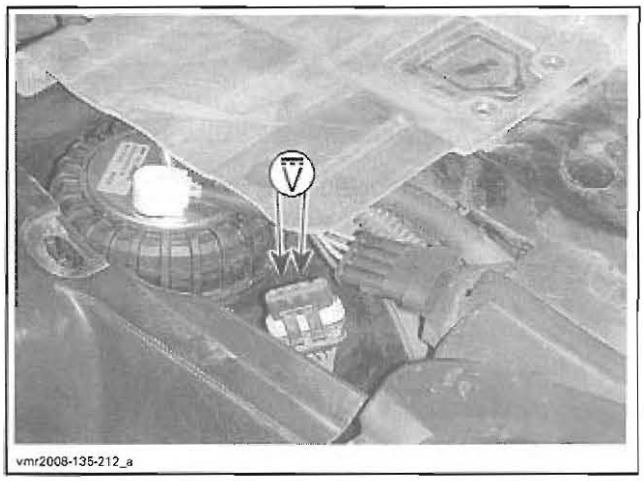

If battery voltage is read, carry out a fuel pump winding resistance test.

www.midwestmanuals.com

If battery voltage is not read carry out this voltage test.

FUEL PUMP INPUT VOLTAGE TEST		
TEST PROBES		VOLTAGE READING
Fuel pump connector Pin 3	Battery ground	Battery voltage

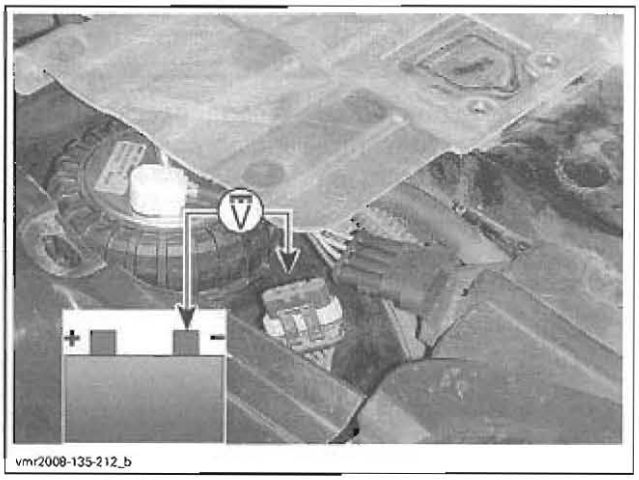

vmr2008-135-212_b

If battery voltage is now read, check fuel pump ground circuit. Refer to *FUEL PUMP WINDING RESISTANCE TEST.*

If battery voltage is still not read, check fuel pump supply circuit. Refer to *FUEL PUMP RELAY INPUT VOLTAGE TEST.*

Fuel Pump Relay Input Voltage Test

Remove front compartment cover and fuse box cover.

Remove fuel pump relay.

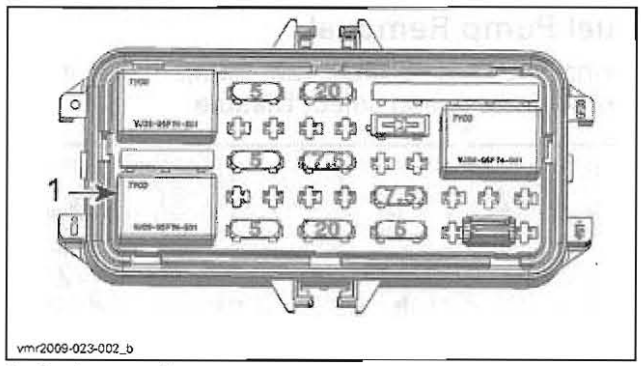

vmr2009-023-002_b

1. Fuel pump relay

Turn ignition key ON.

Set engine stop switch to RUN.

Measure fuel pump relay input voltage at fuse box contacts.

FUEL PUMP RELAY INPUT VOLTAGE TEST		
TEST PROBES		READING
Fuse box contact 1 A	Battery ground	Battery voltage
Fuse box contact 3 A		

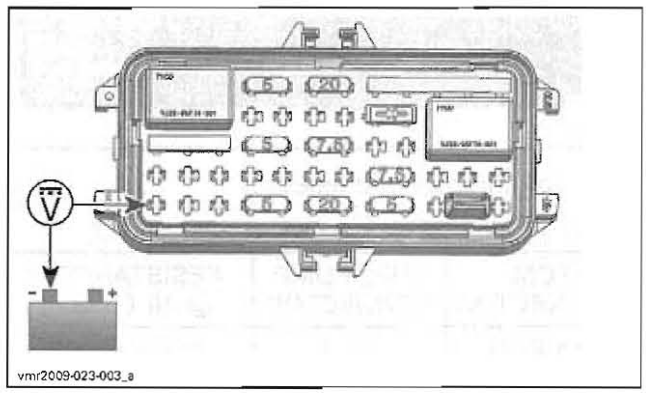

vmr2009-023-003_a

CONTACT 1 A

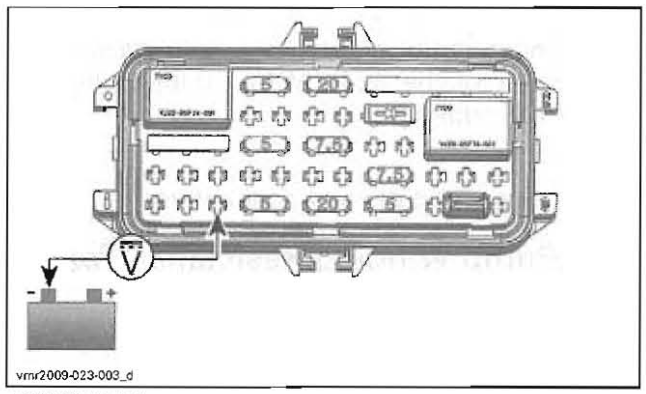

vmr2009-023-003_d

CONTACT 3 A

If battery voltage is not read, test wiring for continuity between battery and fuse box.

If battery voltage is read, test wiring for continuity between fuse box (contact 3B) and fuel pump connector (pin 3).

Repair or replace wiring as required.

Fuel Pump Relay Ground Control Circuit

Remove RH inner fender panel, refer to the *BODY* section.

Disconnect ECM connector B.

Install ECM ADAPTER (P/N 420 277 010) onto ECM connector.

www.midwestmanuals.com

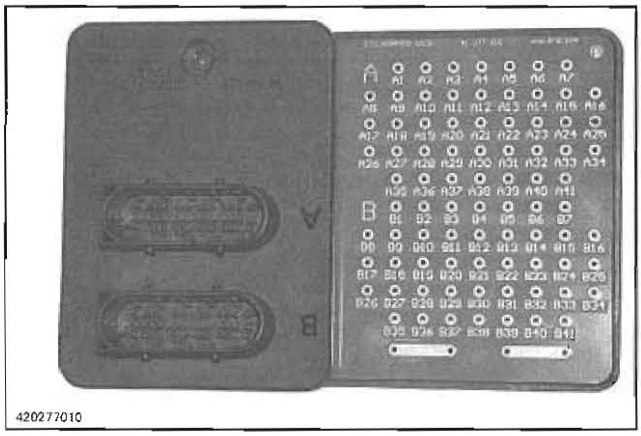

Use a multimeter and select Ω.

Check continuity as follows.

ECM CONNECTOR	FUEL PUMP CONNECTOR	RESISTANCE Ω @ 20°C (68°F)
Pin B-29	Pin 4	Close to 0 Ω

If continuity is good, check ECM. Refer to *ENGINE MANAGEMENT SYSTEM* section.

If continuity is not good, repair or replace wiring and connectors between ECM and fuel pump connector as required.

Remove tool.

Install removed parts and connectors.

Fuel Pump Winding Resistance Test

Remove the fuel pump relay.

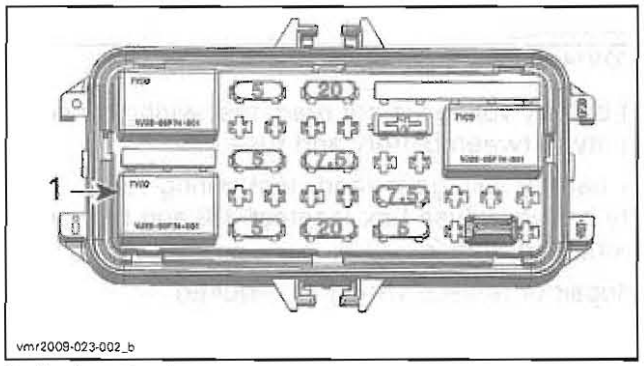

1. Fuel pump relay

Set multimeter to Ω.

Measure winding as follows.

FUEL PUMP WINDING RESISTANCE TEST		
TEST PROBES		RESISTANCE Ω @ 20°C (68°F)
Fuse box contact 3B	Battery ground	Approximately 2.5 Ω

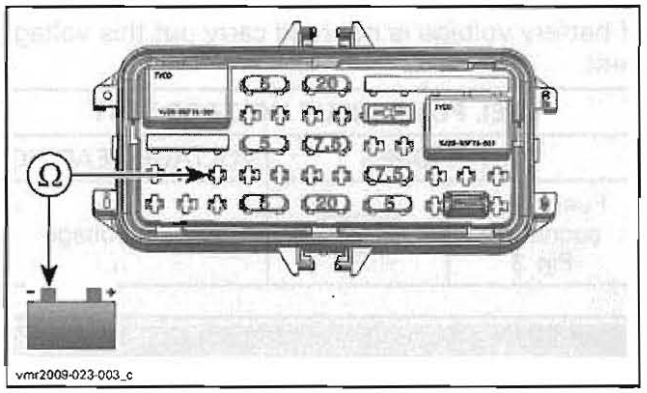

If resistance test failed, disconnect fuel pump connector and measure winding again directly to fuel pump connector.

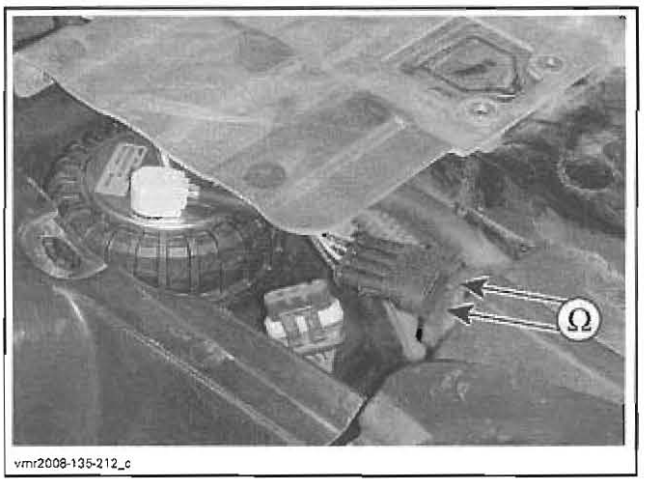

If test failed, check pump wiring and connector and if good, replace fuel pump.

If test succeeded check wiring and connectors from fuse box and to battery ground. Repair or replace as necessary.

Fuel Pump Removal

Using B.U.D.S., disable fuel pump. Look in the **Activation** tab and select **Disable**.

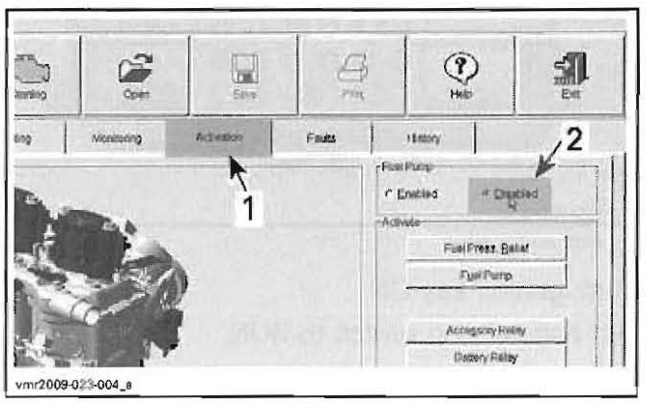

1. Select the **Activation** *tab*
2. Click here to disable the fuel pump

www.midwestmanuals.com

Release fuel pressure by running engine until it runs out of gas.

Remove seat.

Remove seat reinforcement plate (except Outlander MAX).

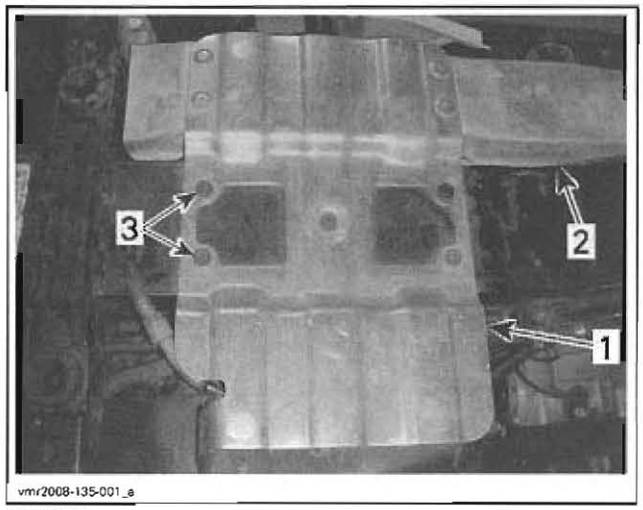

TYPICAL
1. *Seat reinforcement plate*
2. *Exhaust heat shield*
3. *Retaining screws (x5)*

Disconnect electric connector, vent line and fuel hose from fuel pump.

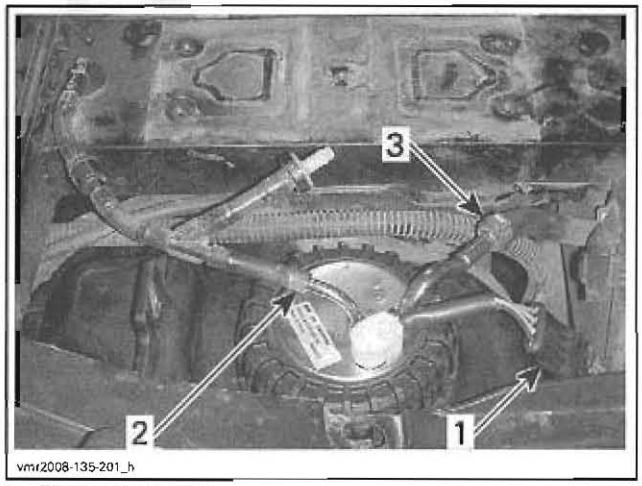

1. *Electric connector*
2. *Vent line*
3. *Fuel hose*

⚠ **CAUTION** Replace fuel pump gasket whenever fuel pump retaining nut is loosen.

Use the FUEL PUMP NUT TOOL (P/N 529 035 899).

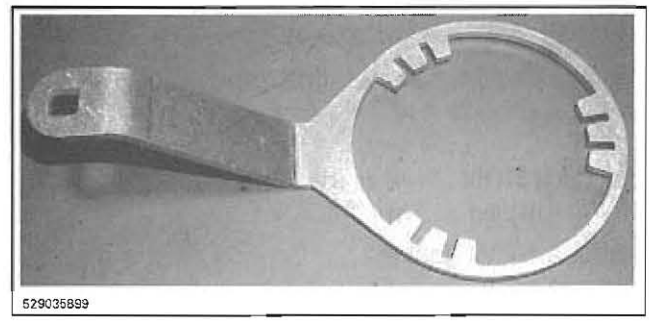

Unscrew fuel pump retaining nut.

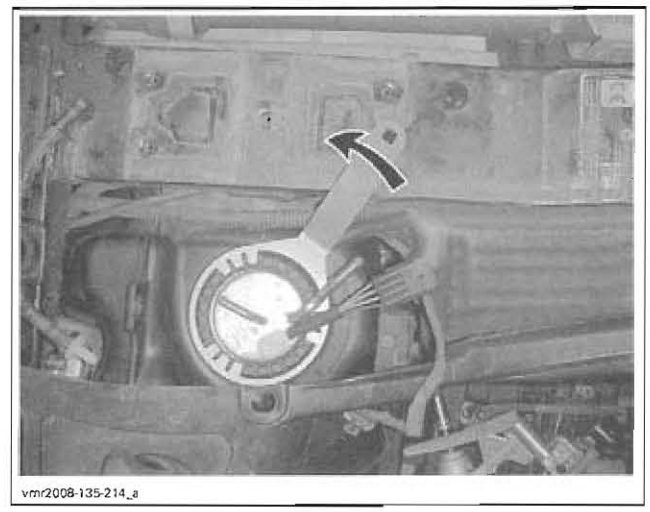

Carefully pull out fuel pump.

⚠ **CAUTION** While pulling out the fuel pump, pay attention to fuel sensor float arm. Float arm can get stuck and bend reducing fuel sensor accuracy.



Discard gasket.

Wipe off any fuel spillage.

www.midwestmanuals.com

Fuel Pump Installation

For installation, reverse the removal process but pay attention to the following.

⚠ CAUTION Never install a damaged pump or a dropped pump.

Install a NEW gasket.

Place gasket so that its flange will be between pump and tank mounting surface.

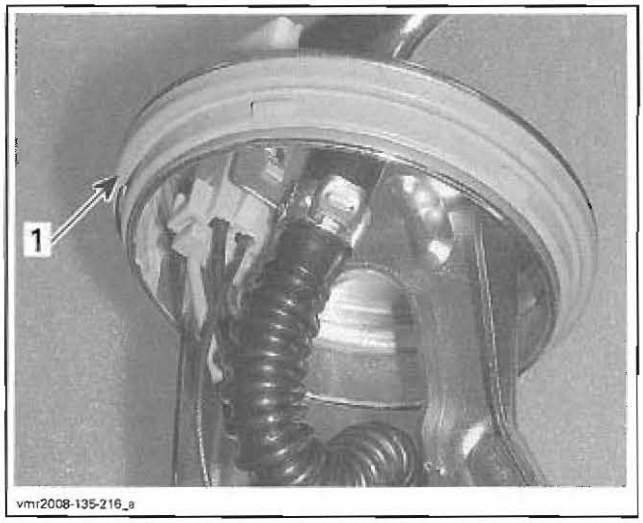

1. Gasket flange here

Pay attention to pump orientation as in following illustration.



Firmly push against pump to align its gasket parallel with tank surface (all around).

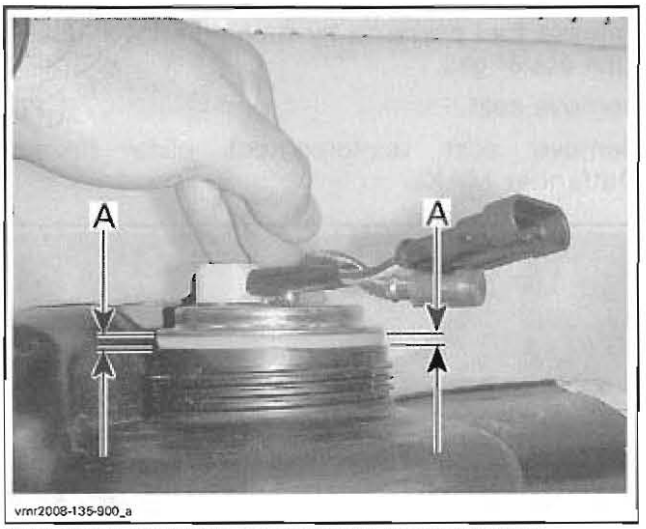

FUEL TANK REMOVED FROM VEHICLE FOR CLARITY
A. Gasket parallel with tank surface (all around)

While maintaining pump seated, rotate pump to align its mark with the mark on the fuel tank as per the following specification.

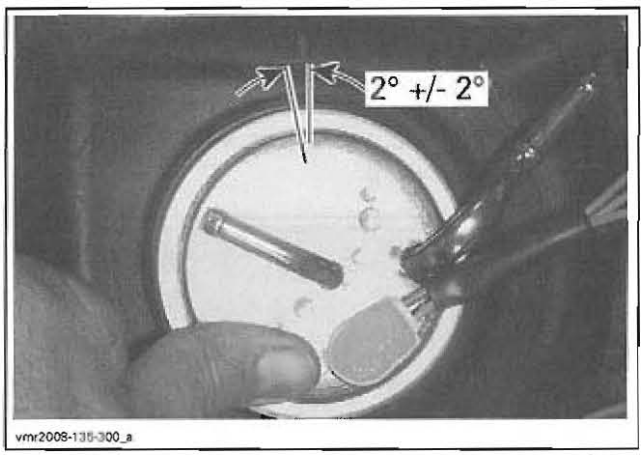

ANGLE PURPOSELY EXAGGERATED IN ILLUSTRATION FOR CLARITY

While firmly holding pump against tank, engage fuel pump nut threads. Slightly tighten nut while holding pump to prevent it from turning.

www.midwestmanuals.com

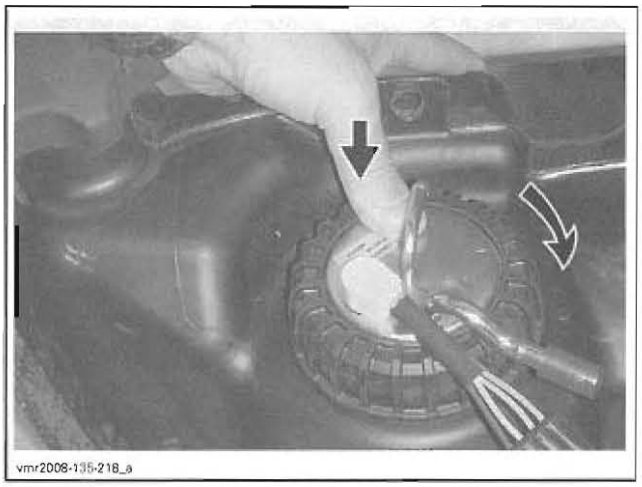

Ensure pump is still aligned as per specification.

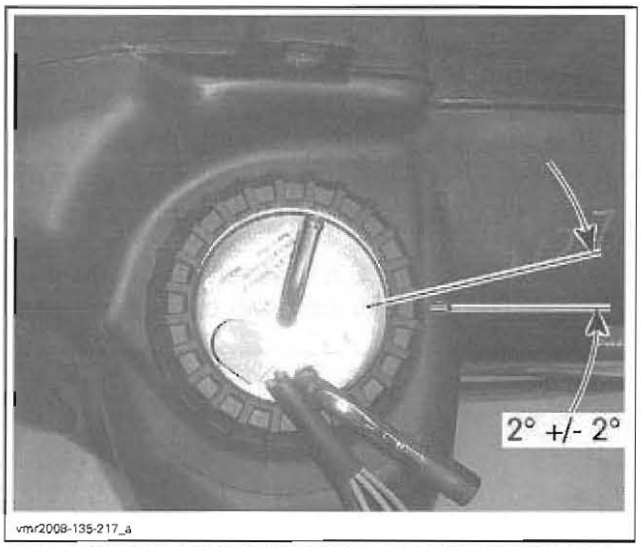

ANGLE PURPOSELY EXAGGERATED IN ILLUSTRATION FOR CLARITY

To apply the proper torque to the pump nut, use a torque wrench and install it perpendicularly (90°) to the tool handle.

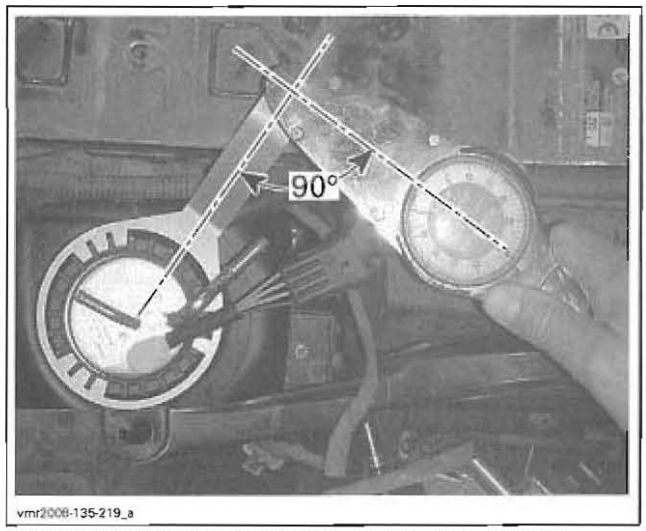

TORQUE WRENCH PERPENDICULAR TO TOOL HANDLE

Torque nut while ensuring pump does not rotate as nut is tightened. Reposition as necessary.

Secure fuel hose with a new clamp.

Reinstall remaining removed parts.

Using B.U.D.S., enable the fuel pump. Look in the **Activation** tab and select **Enable**.

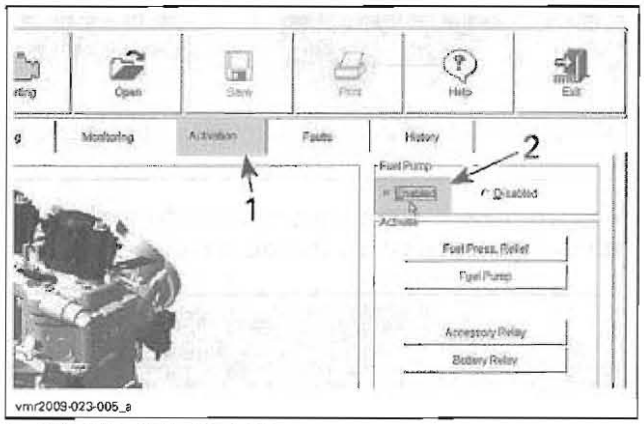

1. *Select the* **Activation** *tab*
2. *Click here to enable the fuel pump*

Refuel tank and ensure there are no leaks by performing a *FUEL TANK LEAK TEST* and a *FUEL PRESSURE TEST* as described in this section.

Check fuel level sensor operation.

Fuel Pump Strainer Replacement

Remove *FUEL PUMP*, see procedure above in this section.

Unlock 2 tabs of plastic ring on opposite sides.

www.midwestmanuals.com

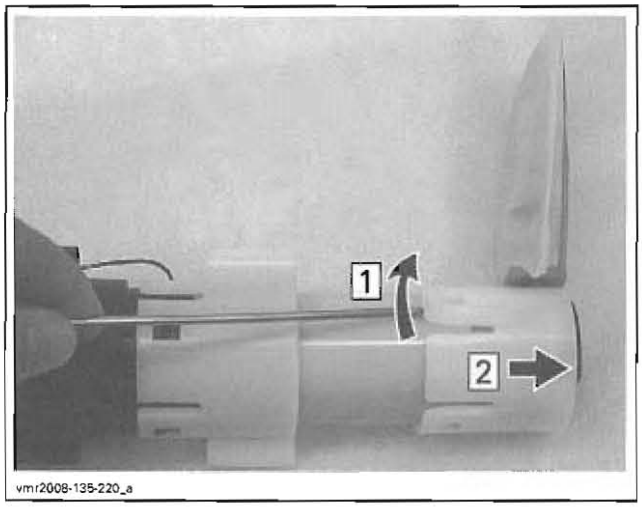

Remove rubber pad.

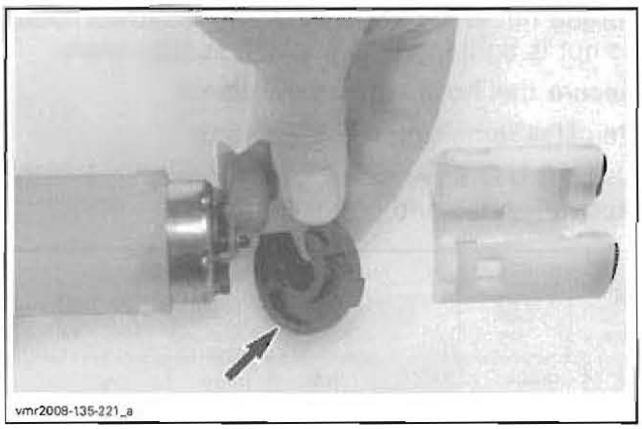

Remove push nut securing strainer to fuel pump. Be careful not to break the plastic pin.

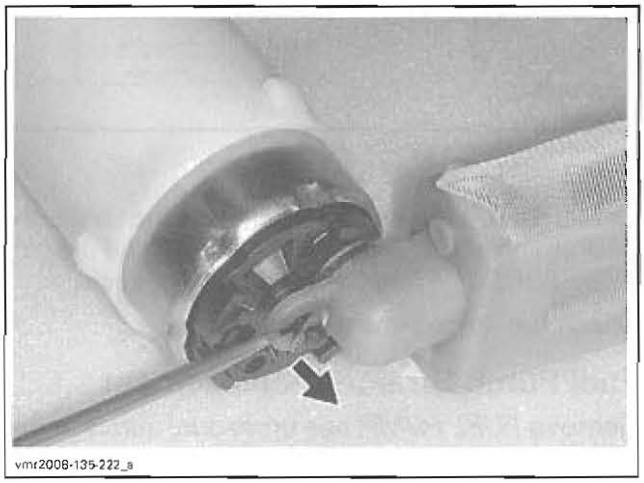

Pull strainer off fuel pump.



NOTE: A non serviceable filter is located in fuel pump. If it is clogged, replace fuel pump.

Insert the new strainer on fuel pump making sure to press it in tightly against pump face.

Press in a NEW push nut to secure strainer.

Reinstall remaining removed parts.

FUEL LEVEL SENSOR

The fuel level sensor is a float actuated variable resistance type sensor that is part of the fuel pump.

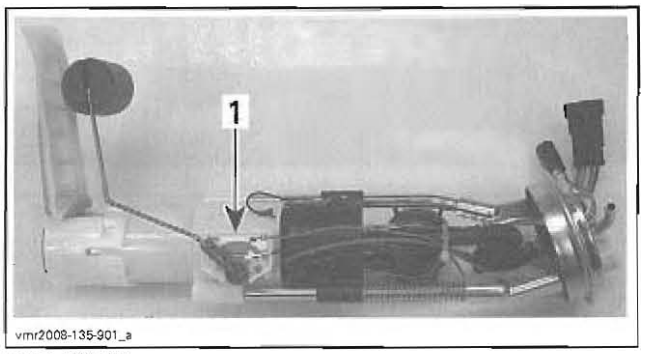

FUEL PUMP
1. Fuel level sensor

Fuel Level Sensor Resistance Test

Remove and disconnect multifunction gauge, refer to the *LIGHTS/GAUGE/ACCESSORIES* section.

www.midwestmanuals.com

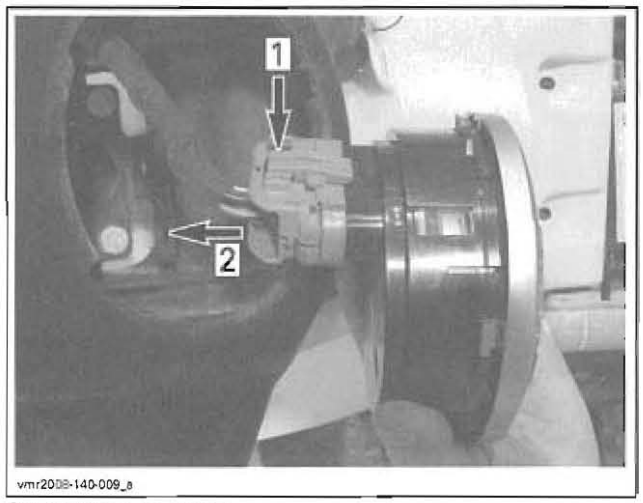

Step 1: Press to release
Step 2: Pull connector off gauge

Use a multimeter and select Ω.

Measure the resistance of the sensor as follows.

FUEL LEVEL SENSOR RESISTANCE TEST		
FUEL LEVEL	GAUGE CONNECTOR	RESISTANCE Ω @ 20°C (68°F)
Full	Pins 4 and 21	5 Ω ± 2
Empty		100 Ω ± 7

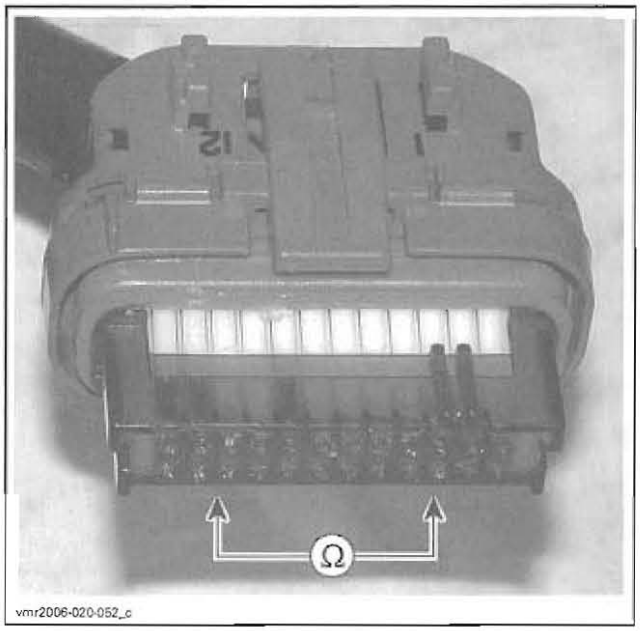

If readings are out of specification check wiring and connectors between multifunction gauge and fuel level sensor. If wiring is good, replace fuel level sensor.

If readings are as per specification, test sensor input voltage from multifunction gauge.

Reconnect the multifunction gauge.

Fuel Level Sensor Input Voltage Test

Set engine stop switch to RUN.

Set ignition switch to ON.

Disconnect fuel level sensor connector.



Use a multimeter and select Vdc.

Measure the input voltage as follows.

FUEL LEVEL SENSOR INPUT VOLTAGE TEST		
FUEL LEVEL SENSOR CONNECTOR	BATTERY	VOLTAGE
Pin 1	Negative terminal	Battery voltage

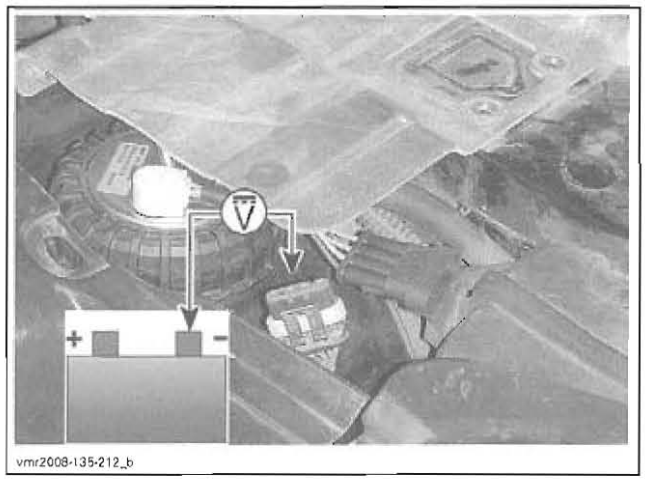

If battery voltage is not read, test wiring continuity between sensor and multifunction gauge.

If wiring was good, replace multifunction gauge.

If continuity was not obtained, repair or replace wiring.

Fuel Level Sensor Replacement

Replace fuel pump.

www.midwestmanuals.com

www.midwestmanuals.com

CHARGING SYSTEM

SERVICE TOOLS

Description	Part Number	Page
4-PIN MAGNETO HARNESS ADAPTER	529 036 021	41

GENERAL

Refer to the *2008 SHOP MANUAL* (P/N 219 100 273) for topics not covered in this section.

PROCEDURES

STATOR

Remove seat and RH side panel.

Remove protective plate as necessary.

Static Test: Continuity

1. Disconnect the magneto wiring harness connector.



2. Install the 4-PIN MAGNETO HARNESS ADAPTER (P/N 529 036 021) on magneto connector. Leave the other connector unplugged.

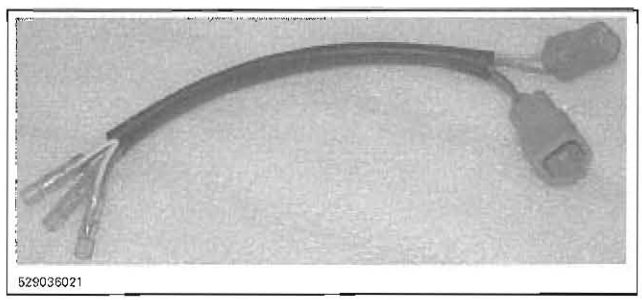

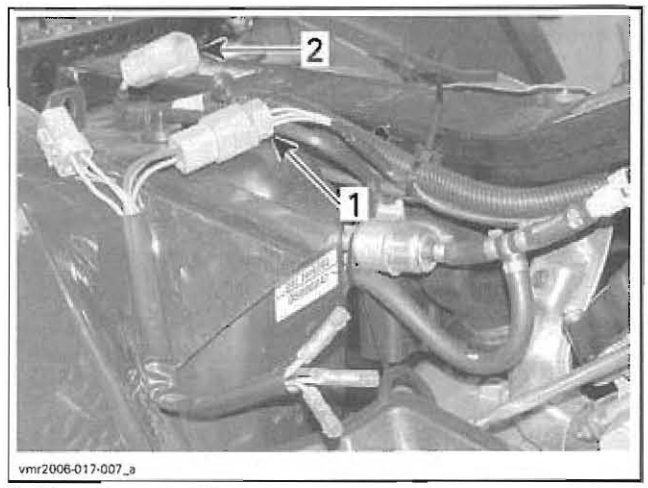

1. Magneto connector
2. Leave this tool connector unplugged

3. Set multimeter to Ω.
4. Connect multimeter between YELLOW wires.
5. Read resistance.

TERMINAL	RESISTANCE @ 20°C (69°F)
1 and 2	0.15 - 0.30 Ω
1 and 3	
2 and 3	

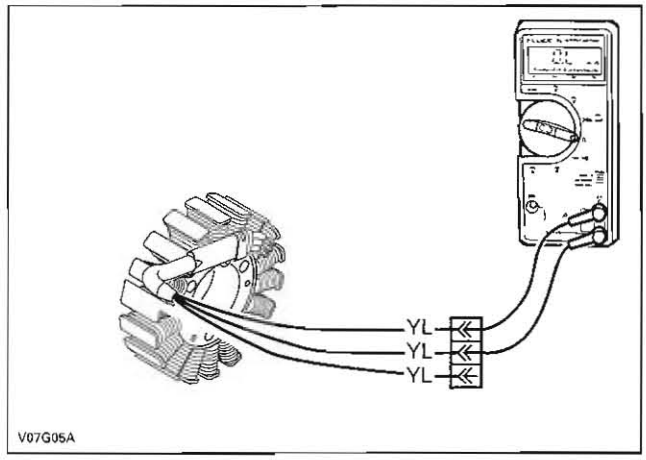

TYPICAL

www.midwestmanuals.com

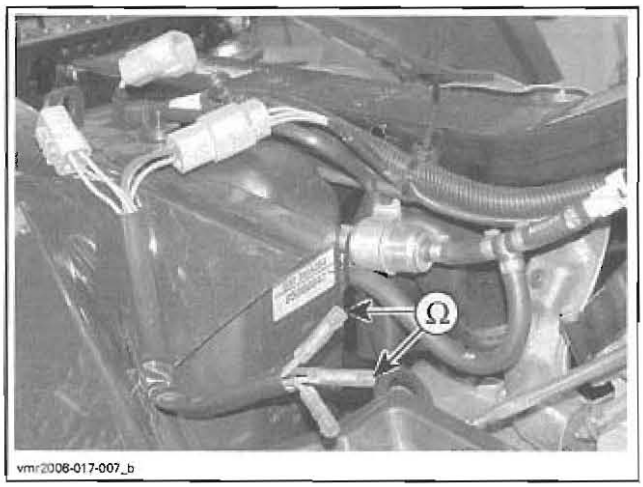

6. If any reading is out of specification, replace stator.
7. Replug connectors properly.

www.midwestmanuals.com

REAR SUSPENSION

SERVICE TOOLS

Description	Part Number	Page
TRAILING ARM NUT SOCKET	529 035 925	45

SERVICE PRODUCTS

Description	Part Number	Page
LOCTITE 271 (RED)	293 800 005	45

www.midwestmanuals.com

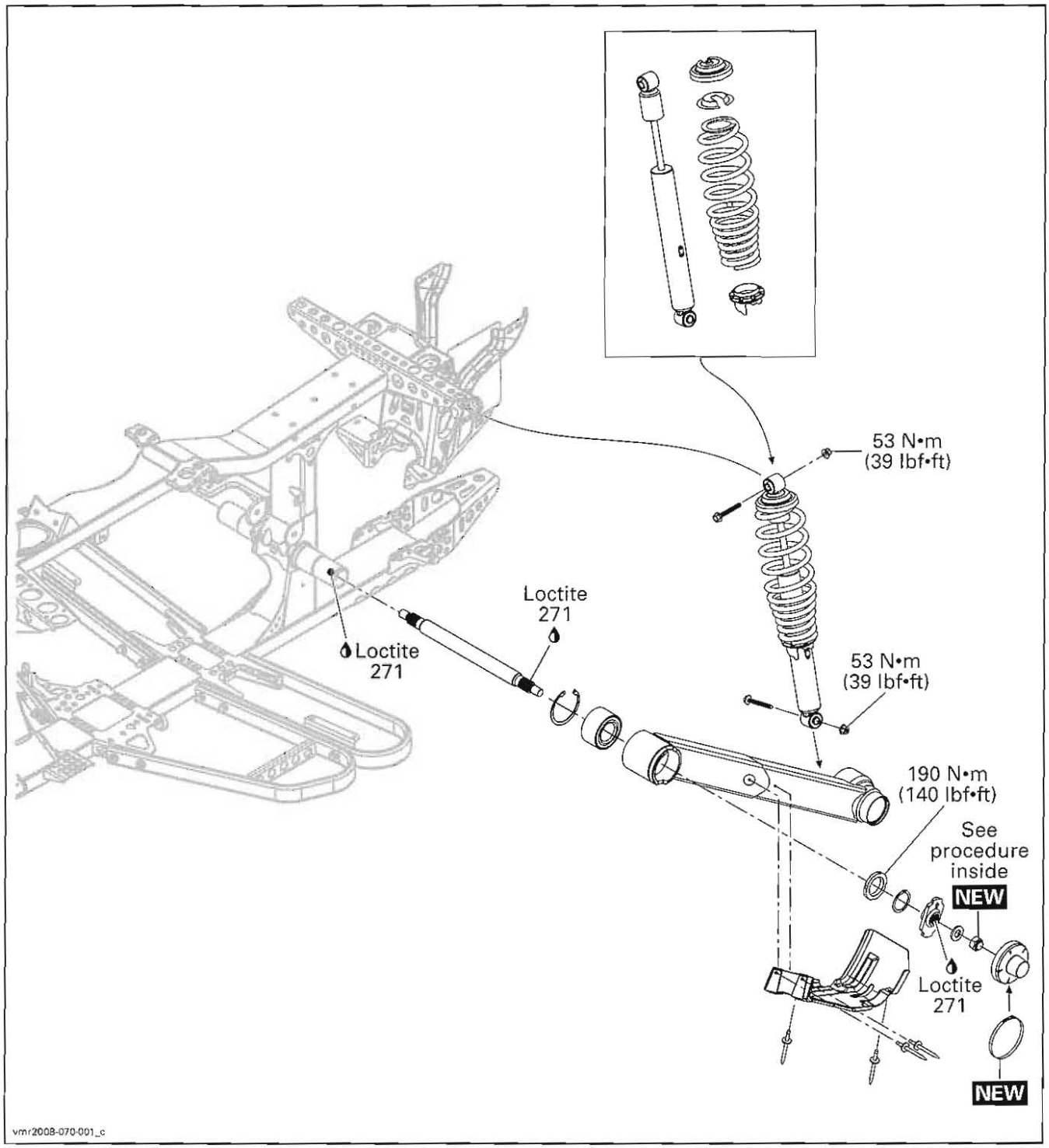

www.midwestmanuals.com

GENERAL

Refer to the *2008 SHOP MANUAL* (P/N 219 100 273) for topics not covered in this section.

PROCEDURES

TORSION BAR

Torsion Bar Installation

Insert the torsion bar into the frame.

Apply a line of LOCTITE 271 (RED) (P/N 293 800 005) on splines of torsion bar and lever.

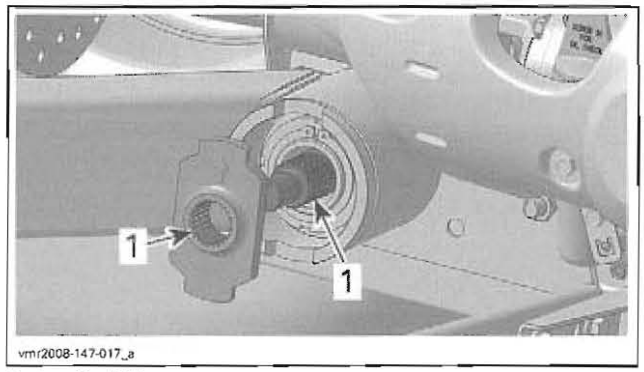

1. Loctite 271

Install both torsion bar levers with the arrows upward. Align lever tabs with trailing arm slots.

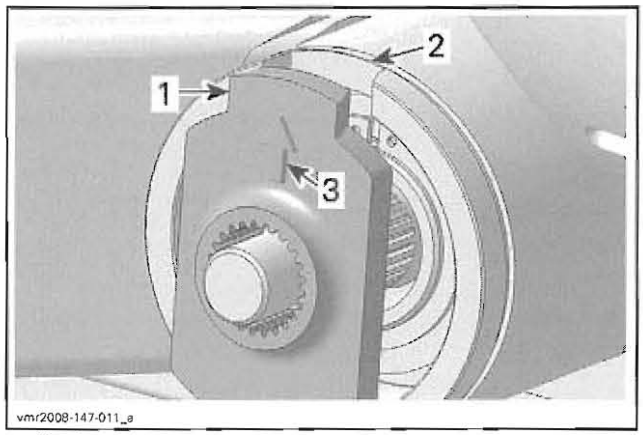

1. Torsion bar lever tab
2. Trailing arm slot
3. Arrow upward

Install the flat washer and a NEW elastic nut.

Tighten **first** the RH elastic nut of torsion bar lever to 55 N•m (41 lbf•ft).

Tighten the LH elastic nut of torsion bar lever to 120 N•m (89 lbf•ft).

Reinstall both protective covers with NEW clamps.

TRAILING ARM

Trailing Arm Installation

Insert drive shaft end into trailing arm.

Install the trailing arm on frame.

Install the lower shock absorber bolt to support the trailing arm. Do not torque yet.

Frame Side

Apply LOCTITE 271 (RED) (P/N 293 800 005) on threads of frame extensions.

Install the trailing arm nut and torque it to 190 N•m (140 lbf•ft) using the TRAILING ARM NUT SOCKET (P/N 529 035 925).

Install the circlip retaining the trailing arm nut.

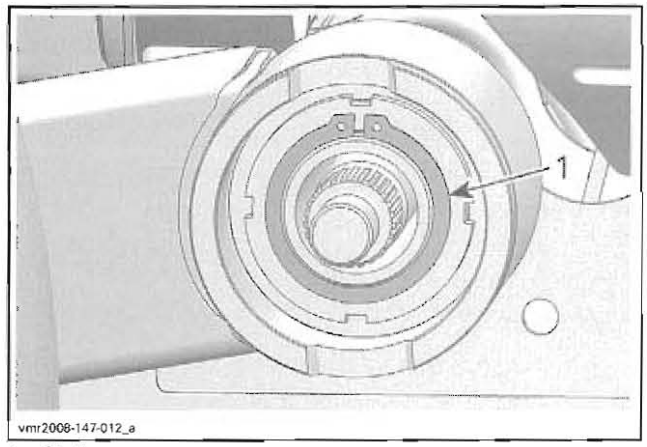

1. Circlip

Finalize the torsion bar installation. Refer to *TORSION BAR* in this section.

Torque the shock absorber lower bolt to 53 N•m (39 lbf•ft).

Wheel Side

Install wheel hub, Belleville washer and castellated nut.

Torque castellated nut to 205 N•m (151 lbf•ft) and further tighten until its grooves align with the next cotter pin hole.

Install a NEW cotter pin then the wheel cap.

NOTE: The longer end of cotter pin must be folded over shaft end.

www.midwestmanuals.com

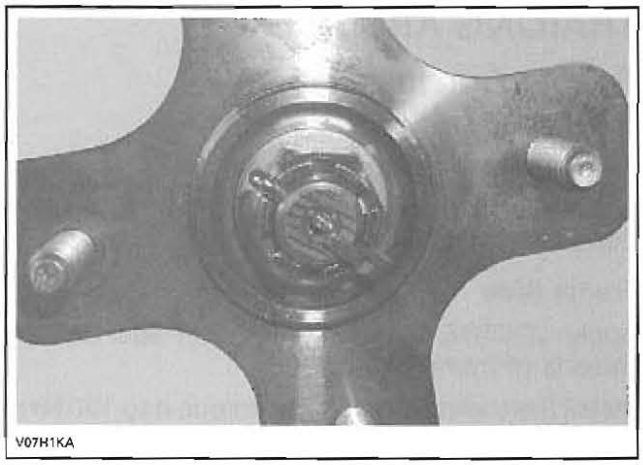
V07H1KA

Install wheel.

www.midwestmanuals.com

FRONT AND REAR BRAKES

SERVICE TOOLS

Description	Part Number	Page
VACUUM/PRESSURE PUMP	529 021 800	55–56

SERVICE PRODUCTS

Description	Part Number	Page
DIELECTRIC GREASE	293 550 004	60, 63
XP-S SYNTHETIC GREASE	293 550 010	61, 66
GTLMA BRAKE FLUID	293 600 062	54
LOCTITE 243 (BLUE)	293 800 060	66

www.midwestmanuals.com

OUTLANDER SERIES (FRONT AND REAR BRAKES)

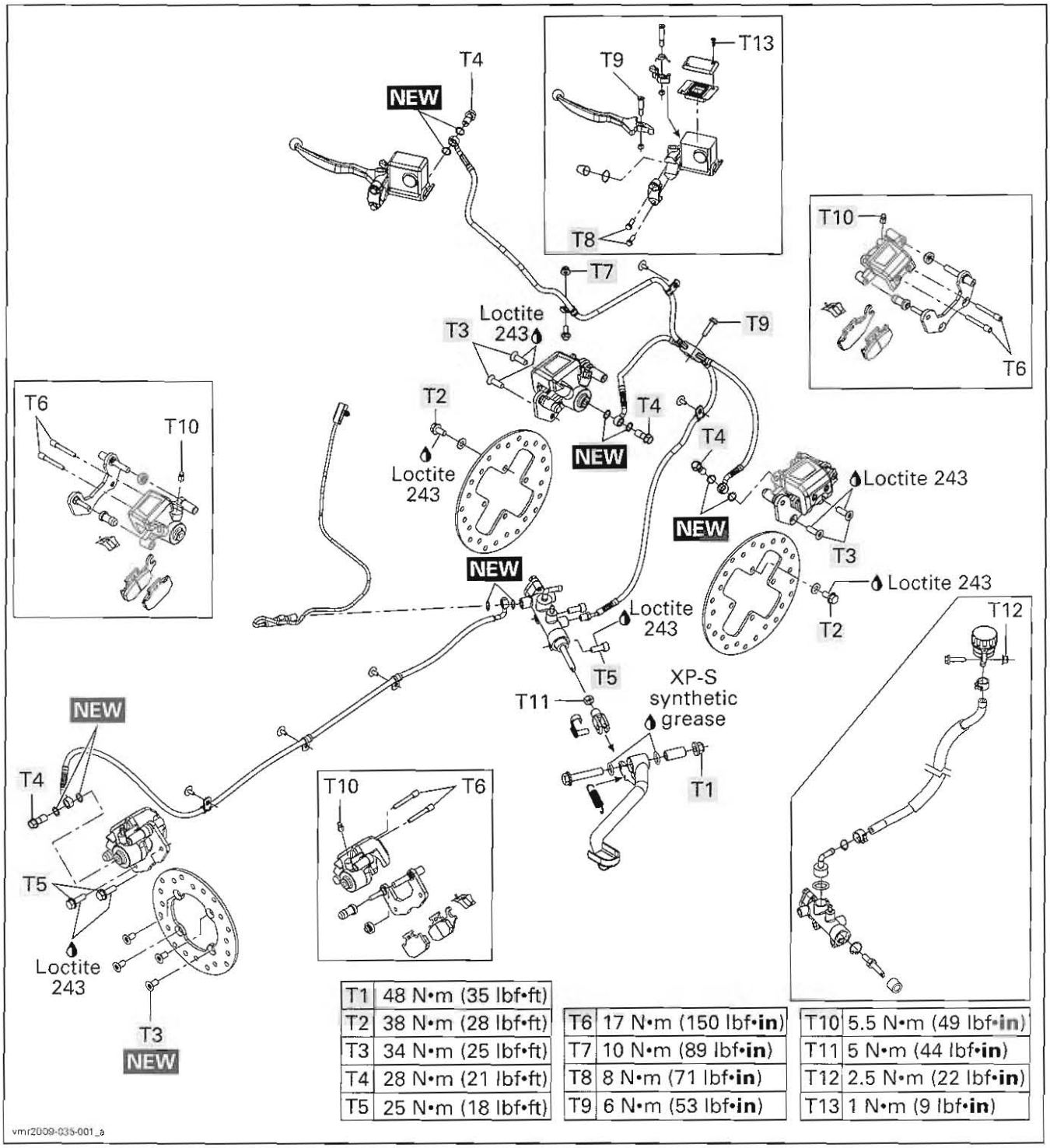

T1	48 N•m (35 lbf•ft)	T6	17 N•m (150 lbf•**in**)	T10	5.5 N•m (49 lbf•**in**)
T2	38 N•m (28 lbf•ft)	T7	10 N•m (89 lbf•**in**)	T11	5 N•m (44 lbf•**in**)
T3	34 N•m (25 lbf•ft)	T8	8 N•m (71 lbf•**in**)	T12	2.5 N•m (22 lbf•**in**)
T4	28 N•m (21 lbf•ft)	T9	6 N•m (53 lbf•**in**)	T13	1 N•m (9 lbf•**in**)
T5	25 N•m (18 lbf•ft)				

vmr2009-035-001_a

www.midwestmanuals.com

ALL RENEGADE MODELS EXCEPT CE (FRONT BRAKES)

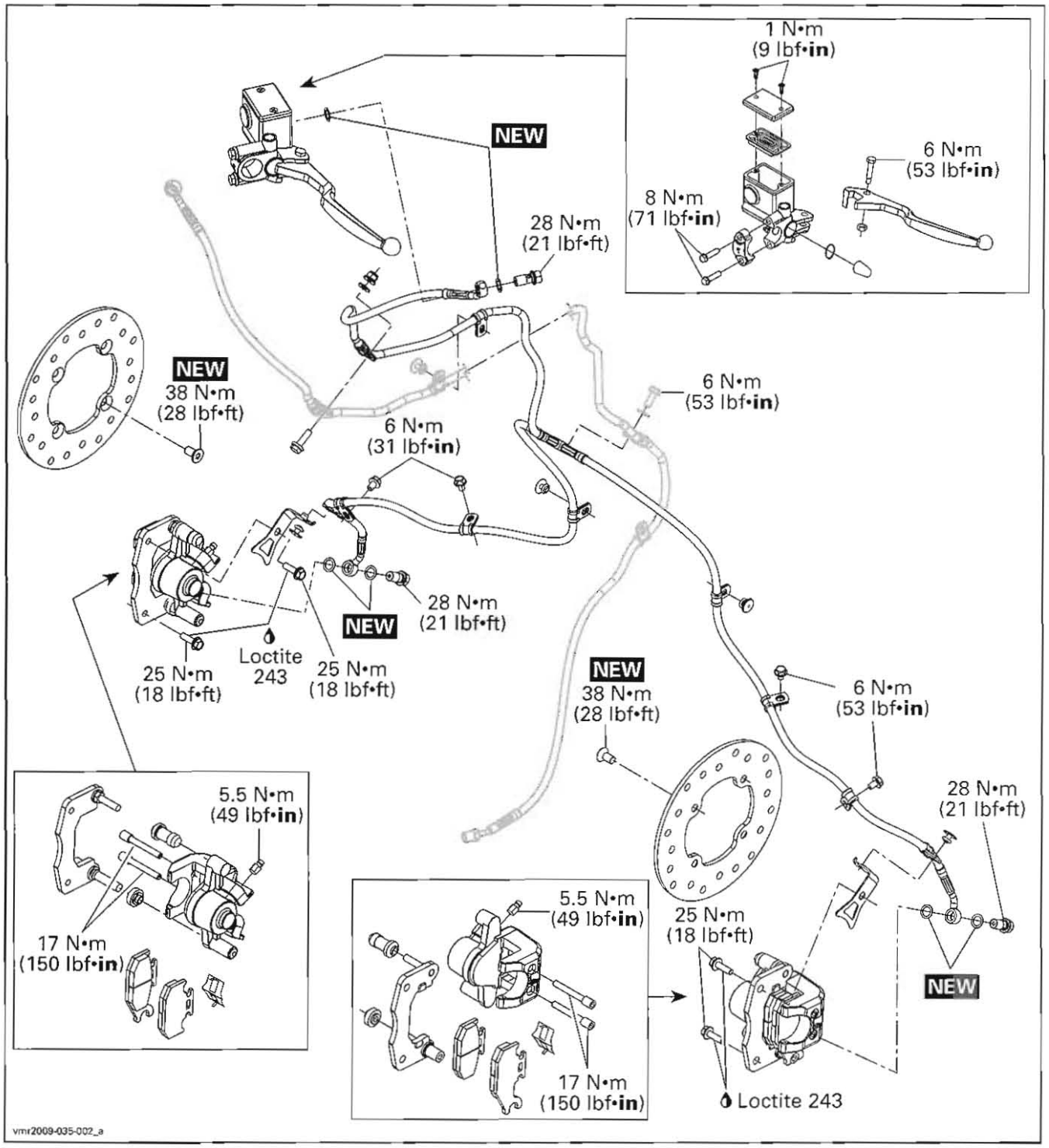

www.midwestmanuals.com

ALL RENEGADE MODELS EXCEPT CE (REAR BRAKE)

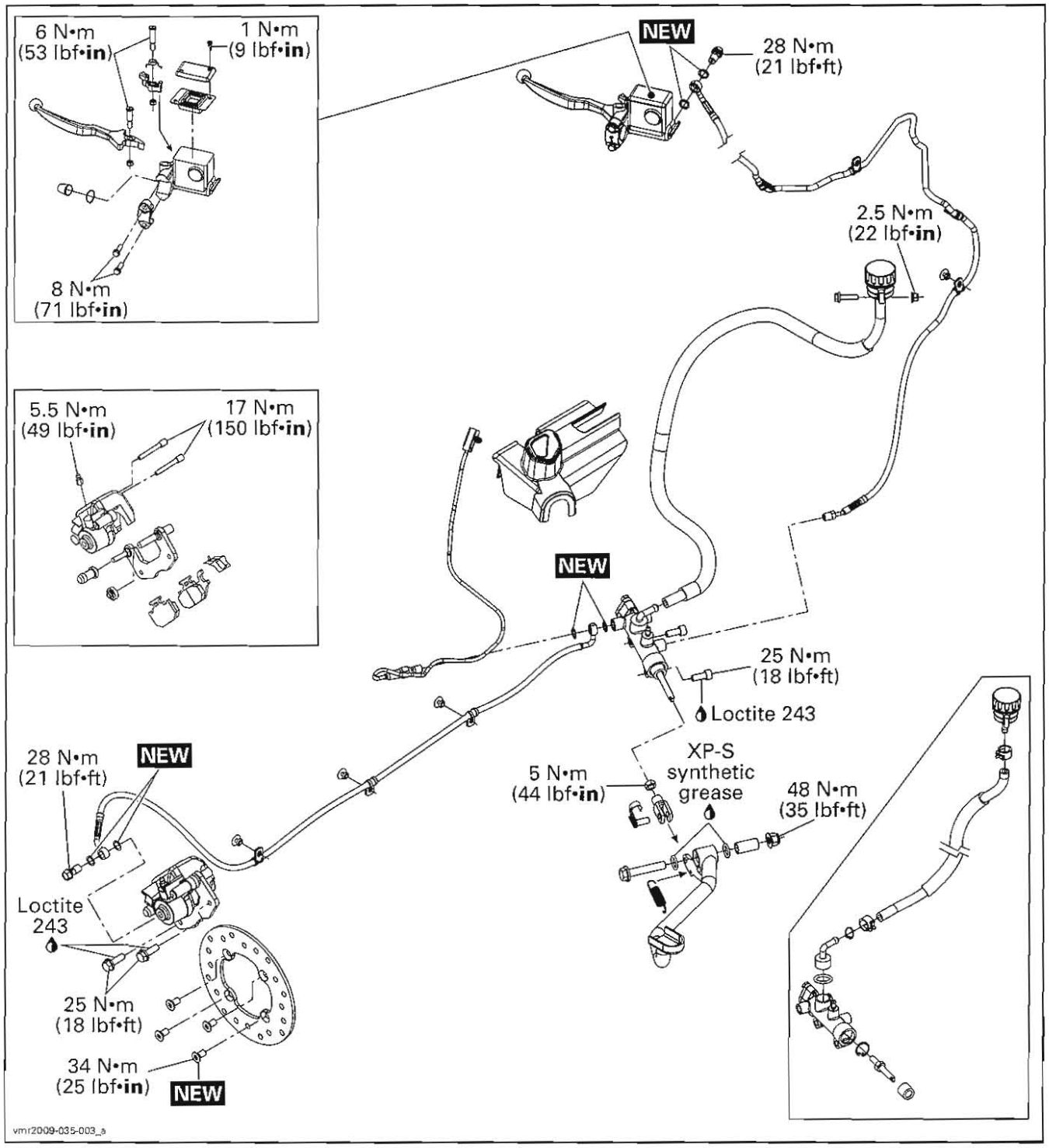

www.midwestmanuals.com

RENEGADE CE MODELS (FRONT BRAKES)

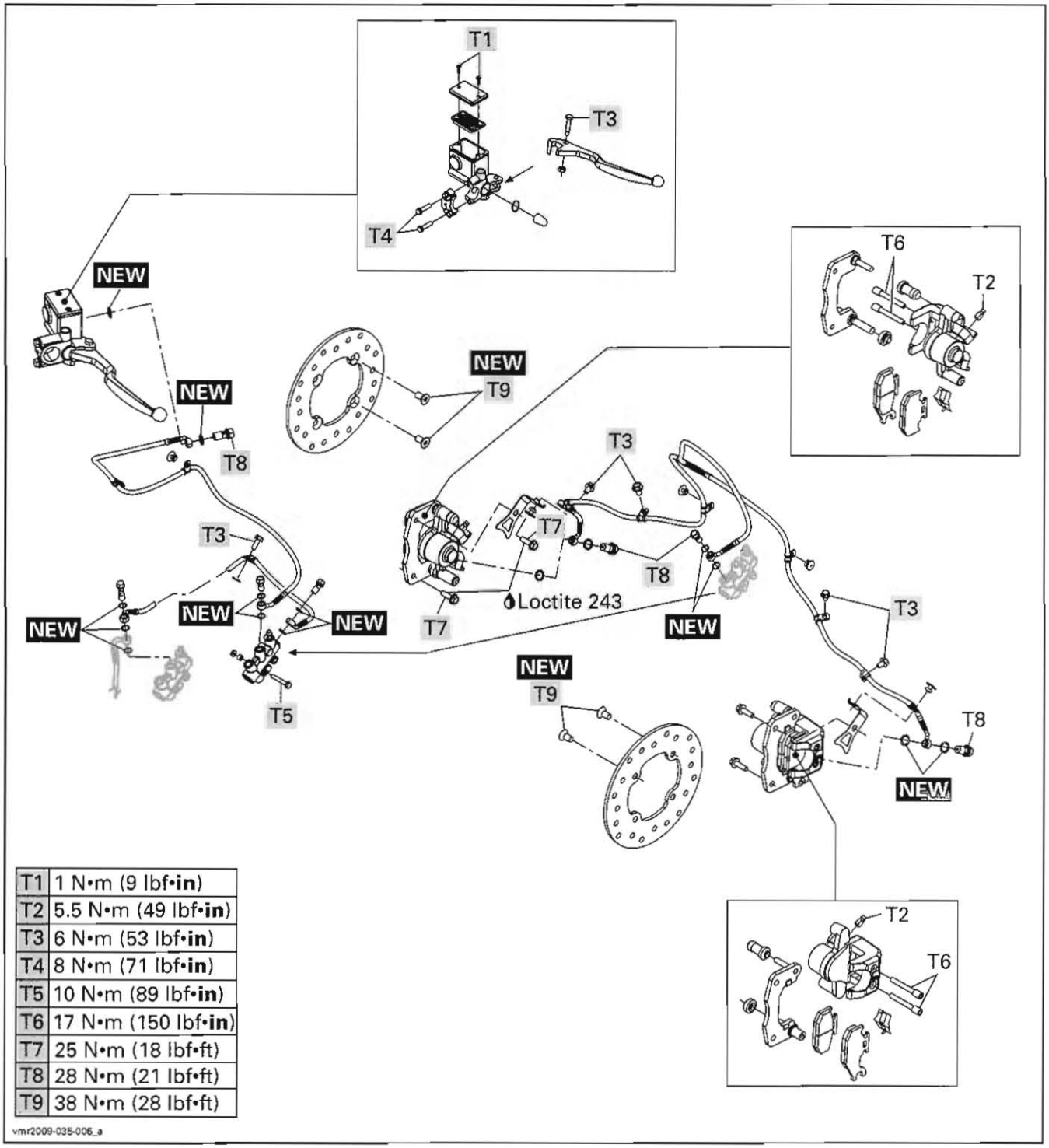

T1	1 N•m (9 lbf•**in**)
T2	5.5 N•m (49 lbf•**in**)
T3	6 N•m (53 lbf•**in**)
T4	8 N•m (71 lbf•**in**)
T5	10 N•m (89 lbf•**in**)
T6	17 N•m (150 lbf•**in**)
T7	25 N•m (18 lbf•ft)
T8	28 N•m (21 lbf•ft)
T9	38 N•m (28 lbf•ft)

vmr2009-035-006_a

www.midwestmanuals.com

RENEGADE CE MODELS (REAR BRAKE)

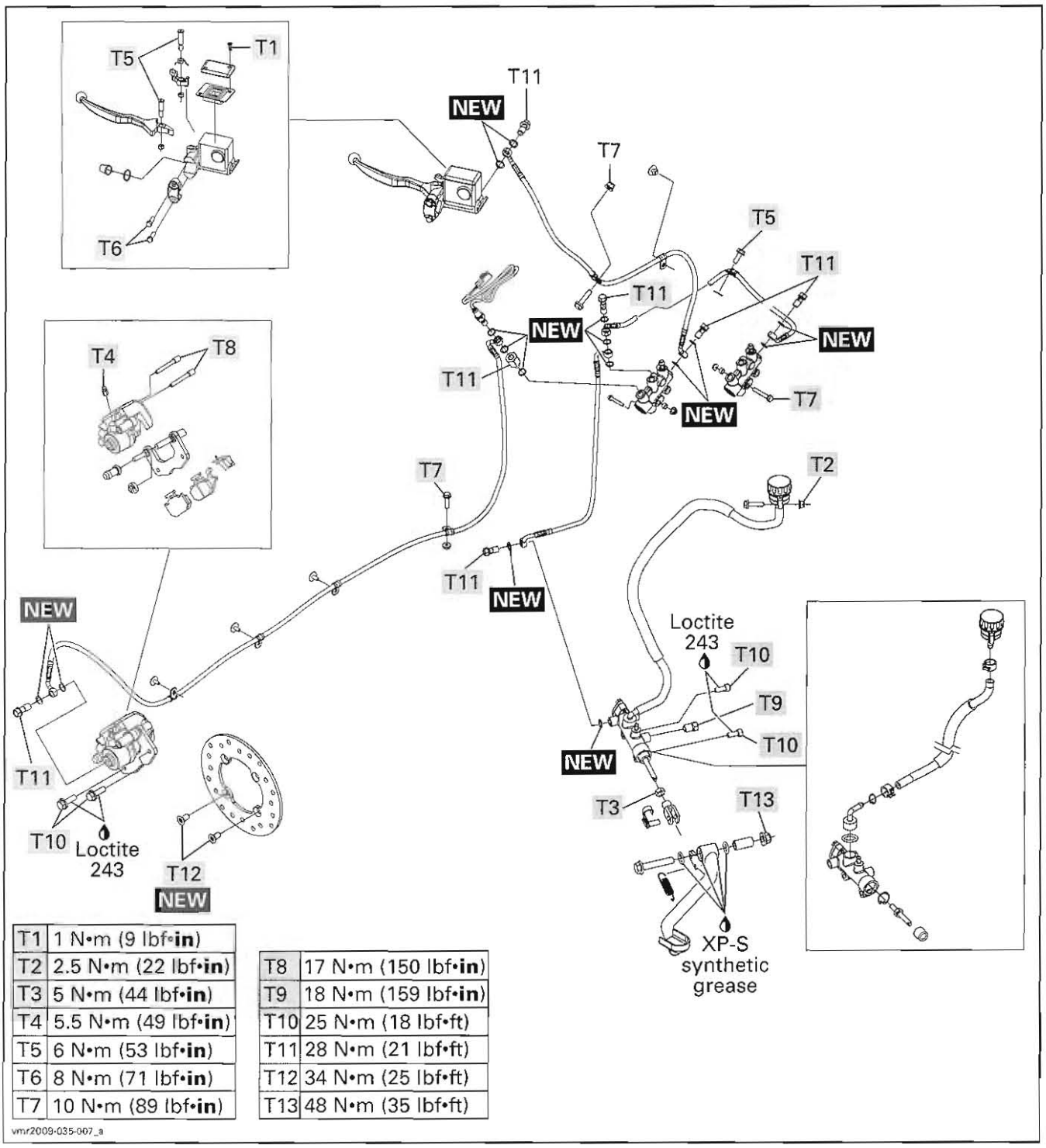

T1	1 N•m (9 lbf•**in**)
T2	2.5 N•m (22 lbf•**in**)
T3	5 N•m (44 lbf•**in**)
T4	5.5 N•m (49 lbf•**in**)
T5	6 N•m (53 lbf•**in**)
T6	8 N•m (71 lbf•**in**)
T7	10 N•m (89 lbf•**in**)

T8	17 N•m (150 lbf•**in**)
T9	18 N•m (159 lbf•**in**)
T10	25 N•m (18 lbf•ft)
T11	28 N•m (21 lbf•ft)
T12	34 N•m (25 lbf•ft)
T13	48 N•m (35 lbf•ft)

vmr2009-035-007_a

www.midwestmanuals.com

GENERAL

During assembly/installation, use the torque values and service products as in the exploded view(s).

Clean threads before applying a threadlocker. Refer to *SELF-LOCKING FASTENERS* and *LOCTITE APPLICATION* at the beginning of this manual for complete procedure.

⚠ WARNING

Torque wrench tightening specifications must strictly be adhered to.
Locking devices (e.g.: locking tabs, elastic stop nuts, cotter pins, etc.) must be replaced with new ones.

Hoses or cables removed or disconnected must be installed and routed at the same place.

⚠ CAUTION Locking ties removed during a procedure must be replaced and installed at the same location.

⚠ WARNING

Never apply anything to brake fittings, The use of threads sealant or Teflon tape could cause brake system failure. Severe injury or death can occur.

⚠ CAUTION Avoid spilling brake fluid on plastic, rubber or painted parts. Protect these parts with a rag when servicing brake system.

⚠ CAUTION Wipe up any brake fluid spillage.

⚠ CAUTION To avoid serious damage to the brake system, use only DOT 4 brake fluid from a sealed container. Do not use brake fluid taken from old or already opened containers, nor mix different fluids for topping off.

⚠ CAUTION Sealing washers must be discarded and replaced with new ones every time a Banjo fitting is loosen.

⚠ CAUTION Before opening or working near bleeders, reservoirs or fittings, clean the part and its area to avoid system contamination.

Dispose brake fluid as per your local environmental regulation.

SYSTEM DESCRIPTION

The brake system consists of two circuits. Each system has its own master cylinder and reservoir.

Both front and rear brakes are disc type.

⚠ WARNING

Periodically check the brake hoses for damages or leaks. Repair any damage before operating the vehicle.

Parking Brake

The parking brake operates rear brakes. It is activated by a locking mechanism on LH brake lever.

To engage mechanism: Squeeze brake lever and maintain while moving lever lock. Brake lever is now compressed and applying rear brakes.

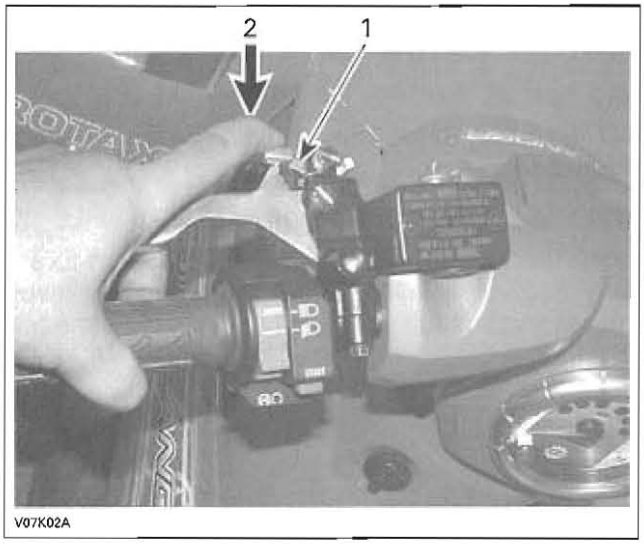

TYPICAL
1. *LH brake lever*
2. *Press lever to activate parking brake*

NOTE: Locking lever can be adjusted in several positions.

NOTICE Parking brake position can vary depending on brake pads wear. Ensure when the parking brake is applied that the vehicle stays securely in place.

To release mechanism: Squeeze brake lever. Lever lock should automatically return to its original position. Brake lever should return to rest position.

www.midwestmanuals.com

MAINTENANCE

BRAKE FLUID

Recommended Brake Fluid

Always use brake fluid meeting the specification DOT 4 only such as GTLMA BRAKE FLUID (P/N 293 600 062).

⚠ **CAUTION** Use only DOT 4 brake fluid from a sealed container. Do not use brake fluid from an old or already opened container. To avoid damage to the braking system, use only the recommended fluid type.

Brake Fluid Level Verification

With vehicle on a level surface, check brake fluid in reservoir for proper level. It should be above MIN. mark.

Clean reservoir cover before removing.

Add fluid as required. Do not overfill.

NOTE: A low level may indicate leaks or worn brake pads.

Brake Lever Fluid Reservoir

Turn steering in the straight-ahead position to ensure reservoir is level. Check the brake fluid level, the reservoir is full when the fluid reaches the top of window.

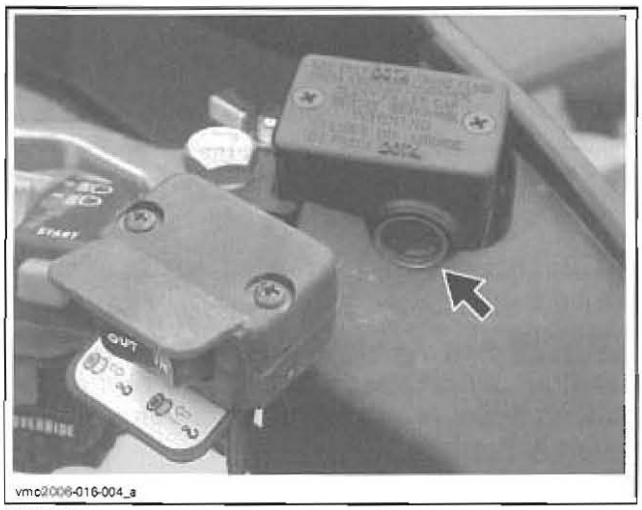

TYPICAL

Visually inspect lever boot condition. Check for cracks, tears, etc. Replace if damaged.

Brake Pedal Fluid Reservoir

Outlander Series



UNDER FRONT ACCESS PANEL

Renegade Models

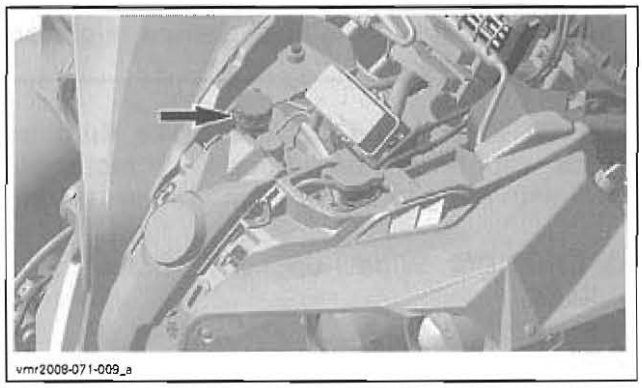

UNDER CONSOLE

Brake Fluid Draining

Clean and remove reservoir cover with its diaphragm.

Connect a clear hose to bleeder.

Loosen bleeder and pump brake lever(s) or brake pedal until no more fluid flows out through the clear hose.

Brake Fluid Bleeding (except Renegade CE Models)

General Recommendations

Fill reservoirs to recommended level using recommended brake fluid only.

www.midwestmanuals.com

Check brake fluid reservoir level often. Do not allow the fluid level to drop below the lower mark during the bleeding process.

For the front brakes, bleed alternately the LH and RH calipers. Turn handlebar to full RH side when bleeding right caliper and turn to the LH side for the left caliper. This helps to bleed the air.

Preparation

Place vehicle on a level surface.

Loosen front wheel lug nuts.

Secure front of vehicle on jack stands.

Remove front wheels.

⚠ **CAUTION** Never use any type of impact wrench for lug nut removal and installation. The use of impact wrench could damage the wheel stud threads and lug nuts.

Renegade Models

Remove clips retaining brake hoses on suspension arms (one on each side).

Remove caliper mounting bolts from both front calipers.

⚠ **CAUTION** Do not let caliper hang by the hose and do not stretch or twist the hose.

Install each caliper horizontally on the top of its brake disc.

Secure caliper with a locking tie.

All Models

Unscrew the bleeder on the top of rear master cylinder until brake fluid comes out then close it.

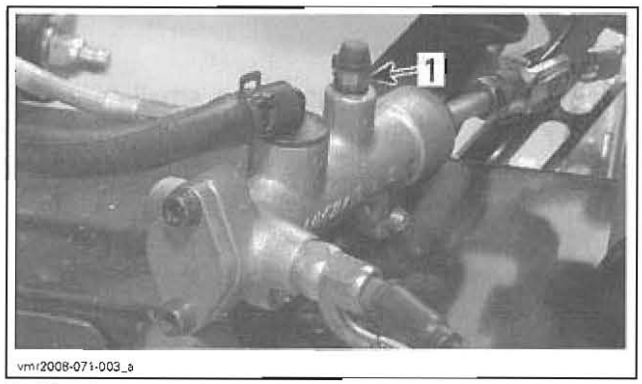

1. Bleeder

On each caliper, unscrew the bleeder until the brake fluid comes out then close it.

Bleed system as per one of the following procedures.

Bleeding Procedure Using a Vacuum Pump

Using a clear hose and the pump reservoir, install the VACUUM/PRESSURE PUMP (P/N 529 021 800) to bleeder.



Place the pump in vacuum position.

Pump vacuum pump then loosen bleeder.

Pump until no more air bubbles appear in clear hose.

Close bleeder.

Operate brake lever or brake pedal. If it still feels spongy, bleed system again.

Repeat the procedures until air bubbles do not appear in hose and lever or pedal is stiff.

Top up reservoirs to the upper level with DOT 4 brake fluid.

Install diaphragms and covers on reservoirs.

Check brakes operation before riding the vehicle.

Manual Bleeding Procedure

Install a clear hose to bleeder.

Place the other end of hose in a small container partially filled with clean brake fluid.

Open bleeder. Fill reservoirs and pump brake lever or brake pedal until fluid freely flows out of the hose.

Pump up system pressure with brake lever or brake pedal until a resistance is felt.

Maintain pressure on lever or pedal while opening the bleeder.

NOTE: When bleeder is opened, brake fluid will flow out from the caliper and brake lever or the brake pedal will move accordingly.

Retighten the bleeder, then release brake lever or brake pedal gradually.

Repeat the procedure until no more air bubbles appear in hose and lever or pedal is stiff.

Top up reservoirs to the appropriate level.

Install diaphragm and covers on reservoirs.

www.midwestmanuals.com

Check brakes operation carefully before riding the vehicle.

Brake Fluid Bleeding (Renegade CE Models)

General Recommendations

Fill reservoirs to recommended level using recommended brake fluid only.

Check brake fluid reservoir level often. Do not allow the fluid level to drop below the lower mark during the bleeding process.

For the front brakes, bleed alternately the LH and RH calipers. Turn handlebar to full RH side when bleeding right caliper and turn to the LH side for the left caliper. This helps to bleed the air.

Preparation

Place vehicle on a level surface.

Loosen front wheel lug nuts.

Secure front of vehicle on jack stands.

Remove front wheels.

⚠ **CAUTION** Never use any type of impact wrench for lug nut removal and installation. The use of impact wrench could damage the wheel stud threads and lug nuts.

Remove clips retaining brake hoses on suspension arms (one on each side).

Remove caliper mounting bolts from both front calipers.

⚠ **CAUTION** Do not let caliper hang by the hose and do not stretch or twist the hose.

Install each caliper horizontally on the top of its brake disc.

Secure caliper with a locking tie.

On each caliper and both splitters, unscrew the bleeder until the brake fluid comes out then close it.

Top up reservoirs if required.

Bleed system as per one of the following procedures.

Bleeding Procedure Using a Vacuum Pump

The brake system is bled in the following sequence:

- Front calipers
- LH splitter
- RH splitter and rear caliper.

Using a clear hose and the pump reservoir, install the VACUUM/PRESSURE PUMP (P/N 529 021 800) to LH front caliper bleeder.

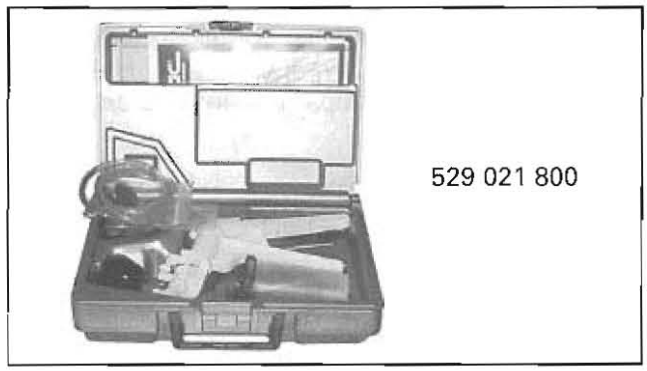

529 021 800

Place the pump in vacuum position.

Pump vacuum pump then loosen bleeder.

Pump until no more air bubbles appear in clear hose.

Close bleeder.

Repeat the same procedure following the proper bleeding sequence for the other bleeders.

Top up reservoir to the upper level with DOT 4 brake fluid.

Install diaphragm and cover on RH hand reservoir.

Check brakes operation before riding the vehicle.

Manual Bleeding Procedure

The brake system is bled in the following sequence:

- Front calipers using the RH brake lever
- LH splitter using the LH brake lever
- RH splitter and rear caliper using the brake pedal.

Install a clear hose to bleeder.

Place the other end of hose in a small container partially filled with clean brake fluid.

Pump brake lever three or four times and hold lever while opening the bleeder.

NOTE: When bleeder is opened, brake fluid will flow out from the caliper and the lever will move accordingly.

Retighten the bleeder, then release brake lever or brake pedal gradually.

Repeat the procedure until no more air bubbles appear in hose and lever and pedal are firm.

Top up reservoirs to the appropriate level.

Install diaphragm and covers on reservoirs.

Check brakes operation carefully before riding the vehicle.

www.midwestmanuals.com

PROCEDURES

REAR BRAKE LIGHT SWITCH

Rear Brake Light Switch Inspection

First ensure brake light is good.

Check brake light switch for dirt or corrosion. Make sure it is operating properly.

Depress brake pedal and check for brake light to turn on. Repeat with the brake lever(s).

Rear Brake Light Switch Test

Outlander Series

Remove the LH footrest.

Renegade Models (except CE)

Remove the master cylinder cover.

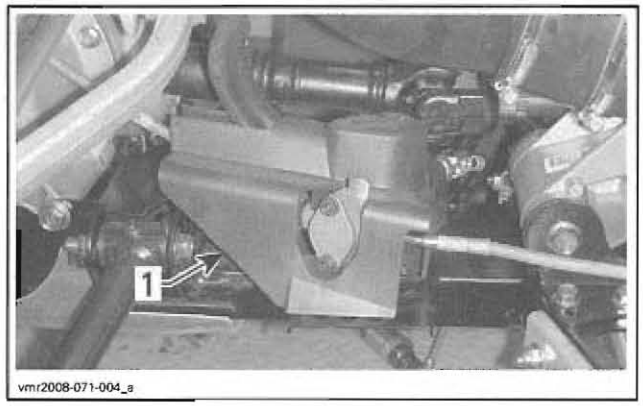

1. Master cylinder cover

Renegade CE

Remove the LH inner fender.

All Models

Disconnect switch connector.

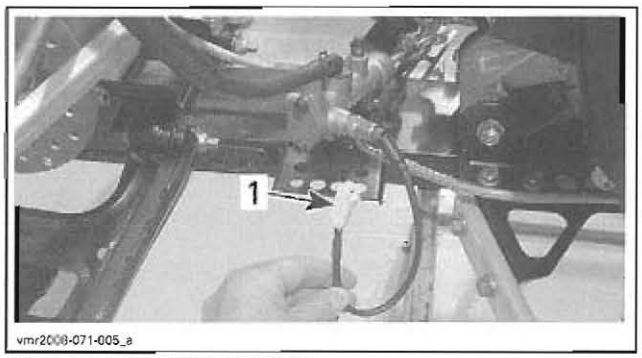

OUTLANDER MODEL SHOWN
1. Switch connector

Check switch operation as follows.

OUTLANDER SERIES			
BRAKE LIGHT SWITCH POSITION	PIN		RESISTANCE
Firmly pushed	1	2	0.2 Ω max.
Released	1	2	Infinite (OL)

RENEGADE MODELS			
BRAKE LIGHT SWITCH POSITION	PIN		RESISTANCE
Firmly pushed	1	3	0.2 Ω max.
Released	1	3	Infinite (OL)

If switch is defective, replace with a new one.

If the switch tests good, verify wire continuity between harness connector and ECM.

ECM CONNECTOR PIN	HARNESS CONNECTOR WIRES	RESISTANCE
B-23	RED/ORANGE	Close to 0 Ω

Rear Brake Light Switch Removal

All Models except Renegade CE

The rear brake light switch is located on the rear master cylinder and it cannot be adjusted.

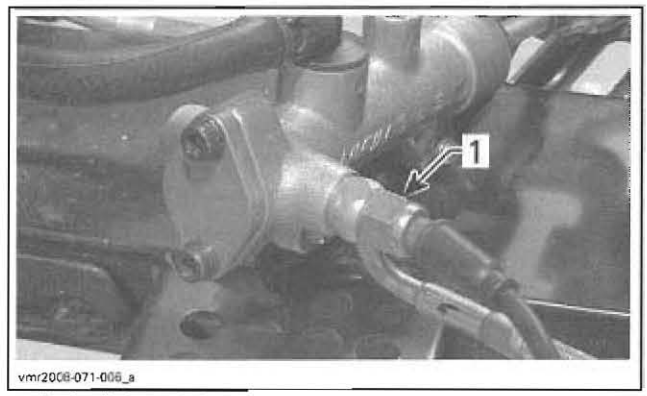

1. Brake light switch

Renegade CE

The rear brake light switch is located on the LH splitter and cannot be adjusted.

All Models

Disconnect switch connector.

Drain brake system.

Unscrew brake light switch from master cylinder or splitter. Catch spilled fluid with a rag.

Discard sealing washers.

www.midwestmanuals.com

Rear Brake Light Switch Installation

For installation, reverse the removal procedure.

Install two NEW sealing washers.

FRONT BRAKE LIGHT SWITCH

Renegade Models

Front Brake Light Switch Inspection

First, ensure bulb is not burnt.

Check brake light switch for dirt or corrosion. Make sure it is operating properly.

Depress front brake lever and check for brake light to turn on.

Front Brake Light Switch Test

Disconnect switch connectors.

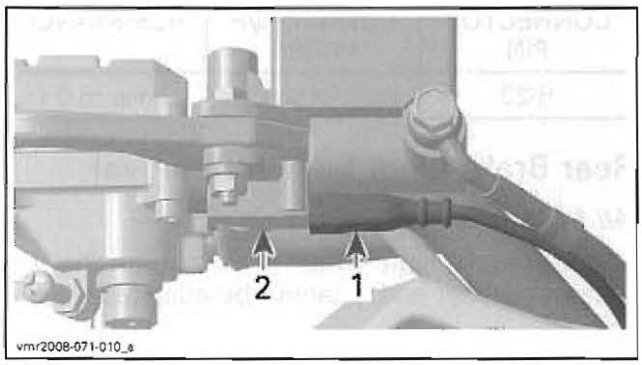

UNDERNEATH RH BRAKE LEVER
1. *Switch connectors*
2. *Brake light switch*

Check switch operation as follows.

BRAKE LIGHT SWITCH POSITION	PIN	RESISTANCE
Firmly pushed	Switch pins	0.2 Ω max.
Released		Infinite (OL)

If switch is defective, replace with a new one.

If the switch test good, verify wire continuity between brake light switch and ECM.

ECM CONNECTOR PIN	BRAKE LIGHT SWITCH PIN	RESISTANCE
B-23	RED/ORANGE	Close to 0 Ω

Front Brake Light Switch Removal

The front brake light switch is located underneath the RH brake lever and it cannot be adjusted.

Disconnect switch connectors.

Unscrew brake light switch from brake lever then remove it.

Front Brake Light Switch Installation

For installation, reverse the removal procedure.

Tighten switch screw to 1 N•m (9 lbf•**in**).

PARKING BRAKE MECHANISM

Parking Brake Mechanism Removal

NOTE: The parking brake mechanism is located on the LH brake handle.

Unscrew nut under LH brake lever.

Remove screw, spring and brake lever lock.

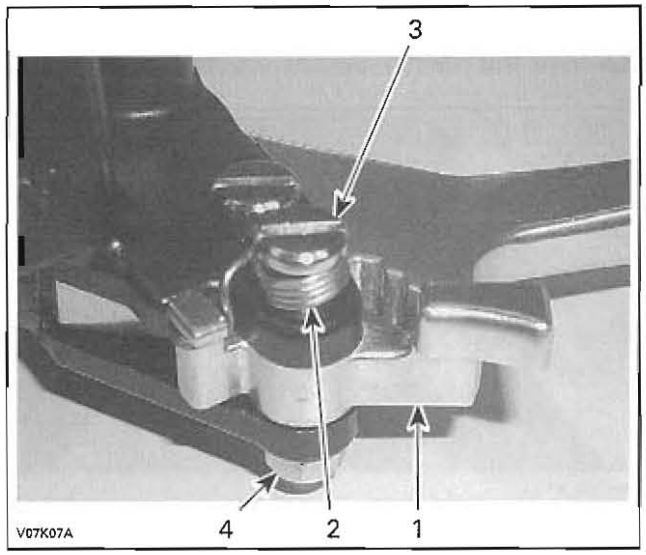

1. *Brake lever lock*
2. *Spring*
3. *Screw*
4. *Nut*

Parking Brake Mechanism Installation

For installation, reverse the removal procedure.

See the following illustration to install the spring properly.

www.midwestmanuals.com

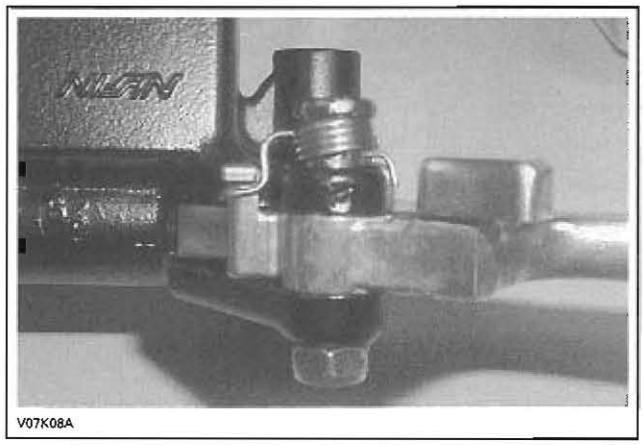
V07K08A

BRAKE LEVER

Brake Lever Removal

Remove the parking brake mechanism (LH brake handle only).

Unscrew the brake lever nut.

Remove the screw and the brake lever.

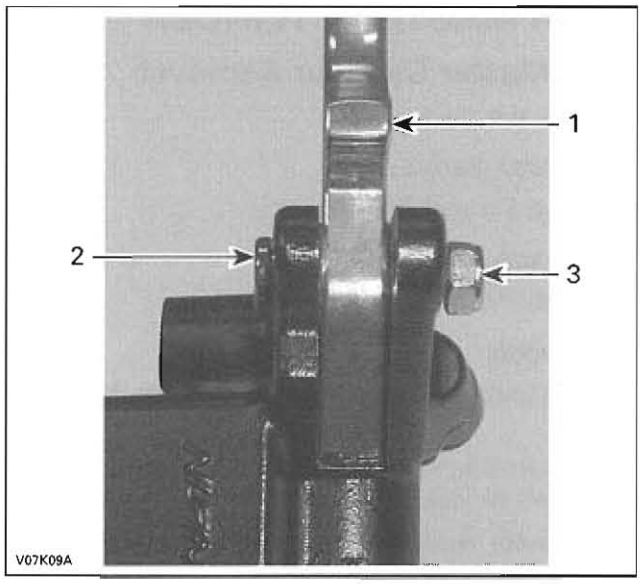

V07K09A

1. *Brake lever*
2. *Screw*
3. *Nut*

Brake Lever Inspection

Check brake lever for bending, cracks or other damages. Replace if necessary.

Brake Lever Installation

For installation, reverse the removal procedure.

FRONT MASTER CYLINDER

Front Master Cylinder Removal

Remove master cylinder cover and its diaphragm then drain brake fluid until front master cylinder reservoir is empty.

Remove banjo fitting and sealing washers retaining brake hose to front master cylinder. Discard the sealing washers.

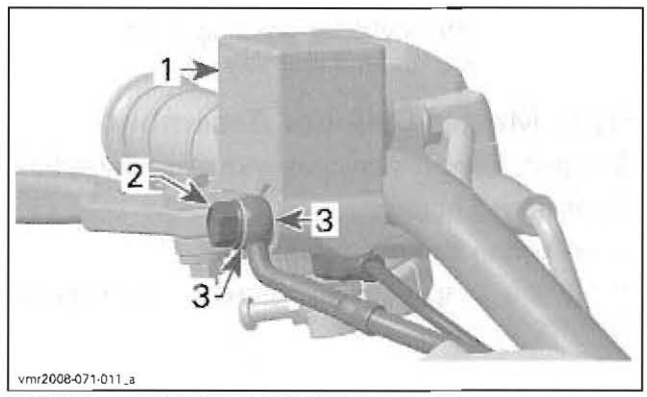

vmr2008-071-011_a

TYPICAL — RH MASTER CYLINDER SHOWN
1. *Front master cylinder*
2. *Banjo fitting*
3. *Sealing washers*

When removing RH master cylinder, unplug brake light switch connectors.

Remove screws from master cylinder holder and remove master cylinder from handlebar.

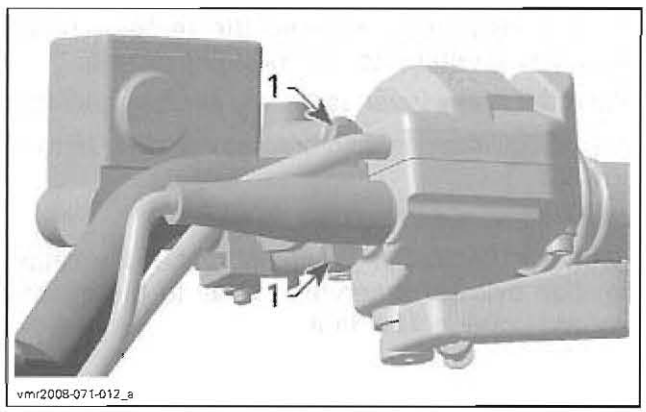

vmr2008-071-012_a

TYPICAL — RH MASTER CYLINDER SHOWN
1. *Holder screws*

Front Master Cylinder Disassembly

Remove brake lever.

Remove piston boot, snap ring, piston and spring.

Front Master Cylinder Inspection and Lubrication

Discard any remaining fluid inside reservoir.

Clean reservoir, piston and master cylinder thoroughly with clean brake fluid.

www.midwestmanuals.com

Check:
- Boot for crack
- Spring for damage
- Piston cup for wear, deterioration or damages
- Master cylinder and piston for scoring, scratches or other damages.

Change part(s) if necessary.

Check if the end cap O-ring is brittle, hard or damaged.

NOTE: If master cylinder housing is damaged or leaking, replace as an assembly.

Front Master Cylinder Assembly

Coat piston and piston cups with clean brake fluid.

Install spring onto piston.

Install piston into master cylinder.

Install the snap ring into groove in the master cylinder.

Install boot into master cylinder and the groove in piston.

Apply DIELECTRIC GREASE (P/N 293 550 004) to the brake lever contacting surface of the piston.

Install brake lever and locking mechanism.

Apply DIELECTRIC GREASE (P/N 293 550 004) on lever pivot bolt.

Front Master Cylinder Installation

For the installation, reverse the removal procedure, pay attention to the following details.

Place the brake lever assembly on the handlebar.

Position cylinder holding bracket with the UP mark upward.

Install screws and tighten loosely.

With the handlebar in straight ahead position, position cylinder reservoir parallel to the ground. Tighten upper screw first.

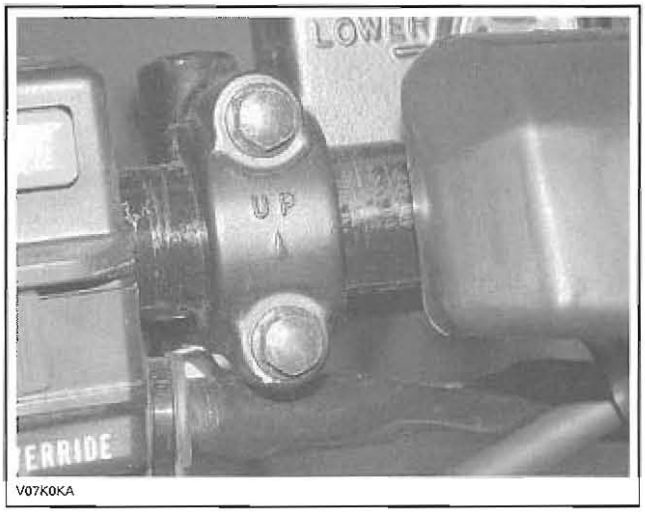

V07K0KA

Connect brake hose to master cylinder with a Banjo fitting and NEW sealing washers.

Bleed brake system.

Check for leaks and make sure the brakes operate normally before driving.

REAR MASTER CYLINDER

Rear Master Cylinder Removal

Drain brake fluid.

Outlander Series

Remove LH and RH footrests.

Renegade Models

Remove the master cylinder cover.

All Models

Unplug brake switch connector (except Renegade CE).

NOTE: At this time, check hoses and fittings for damages or leaks.

Disconnect reservoir flexible hose and plug the end to avoid brake fluid spillage.

Unscrew brake light switch from master cylinder (except Renegade CE). Discard sealing washers.

www.midwestmanuals.com

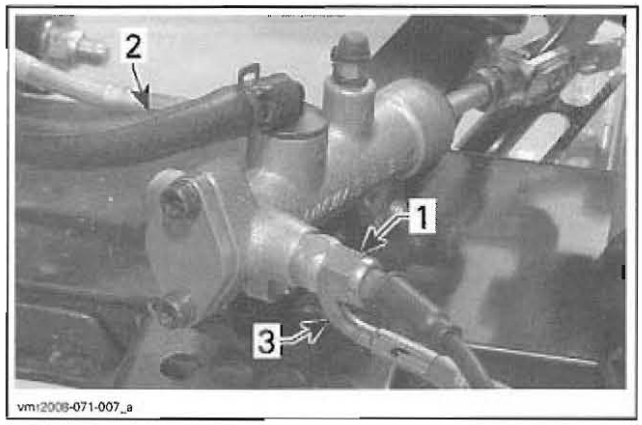

1. *Brake switch*
2. *Reservoir hose*
3. *Rear hose*

Unscrew front hose from master cylinder.

Unhook push rod from brake pedal.

Remove bolts retaining master cylinder to the frame.

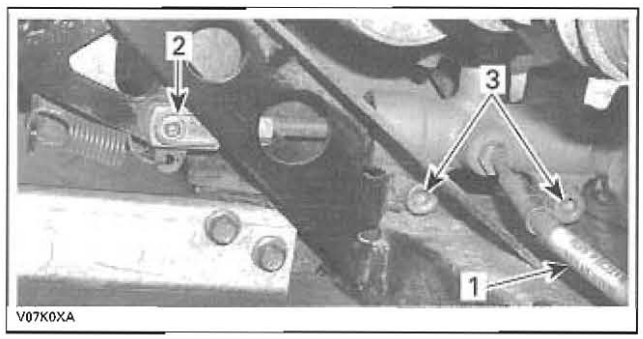

1. *Front hose*
2. *Push rod lock*
3. *Master cylinder bolts*

Rear Master Cylinder Disassembly

Remove the end cap, the spring and the piston.

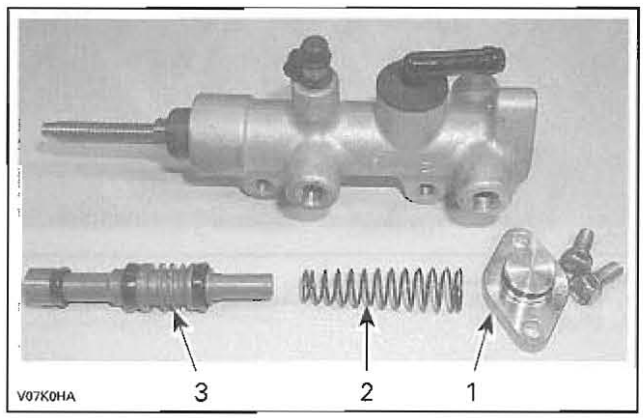

1. *End cap*
2. *Spring*
3. *Piston*

Remove the boot, the snap ring and the push rod.

Rear Master Cylinder Inspection and Lubrication

Discard any remaining fluid inside reservoir.

Clean reservoir, piston and master cylinder thoroughly with clean brake fluid.

Check:
- Boot for crack
- Spring for damage
- Piston cup for wear, deterioration or damages
- Master cylinder and piston for scoring, scratches or other damages.

Change part(s) if necessary.

Check the push rod lock for excessive wear, replace if necessary.

Check if the end cap O-ring is brittle, hard or damaged.

NOTE: If master cylinder housing is damaged or leaking, replace as an assembly.

Rear Master Cylinder Assembly

Apply XP-S SYNTHETIC GREASE (P/N 293 550 010) on both ends of push rod.

Install the push rod, the snap ring and the boot.

If push rod yoke has been removed, reinstall it then adjust push rod length, see the following illustration.

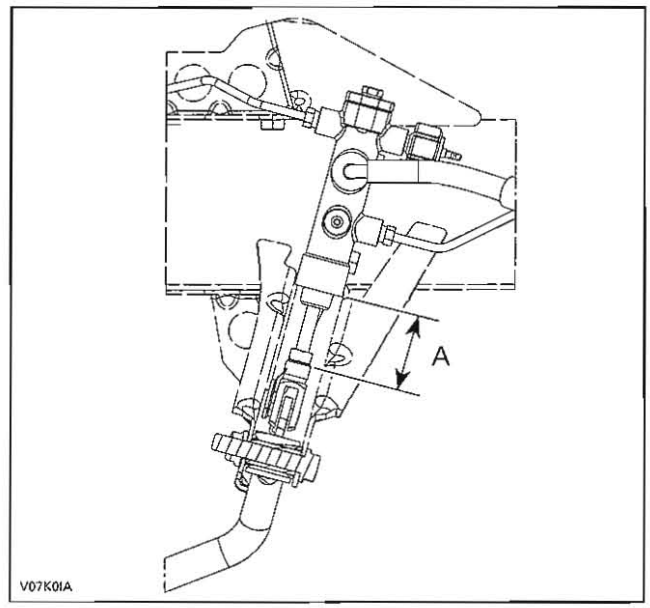

A. 44 ± 1 mm (1.732 ± .039 in)

Coat piston and piston cups with clean brake fluid.

The spring is conical. Install the smaller end on piston.

Insert piston in the master cylinder.

www.midwestmanuals.com

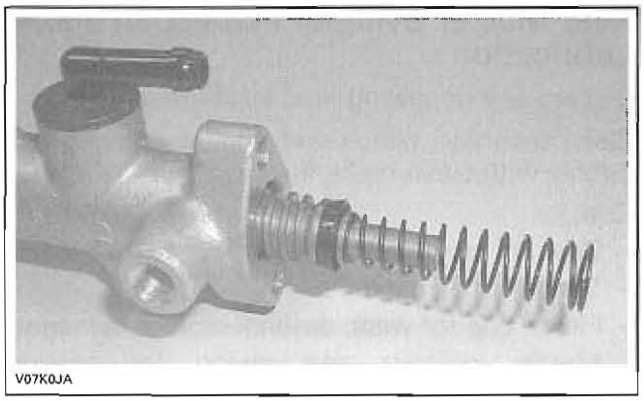
V07K0JA

Install the end cap. Do not forget the O-ring.

Rear Master Cylinder Installation

Install master cylinder to frame.

Hook push rod on brake pedal.

Connect front hose on master cylinder.

Connect reservoir flexible hose.

Install the rear hose and the brake light switch with two NEW sealing washers (except Renegade CE).

Connect brake light switch connector (except Renegade CE).

Fill up reservoir with clean brake fluid.

Bleed brake system.

Check for leaks and make sure the brakes operate normally before driving.

CALIPER

Caliper Removal

Loosen wheel lug nuts.

Raise vehicle and support it securely.

Remove appropriate wheel.

Remove the caliper screws then the caliper. If the caliper is not being removed from the vehicle as during brake pad replacement, simply hang the caliper with a piece of wire to take the weight off the brake hose.

⚠ **CAUTION** Do not let caliper hangs by the hose and do not stretch or twist the hose.

If the caliper is being removed for replacement, drain brake system before removing the Banjo fitting and its sealing washers. Remove the caliper from the vehicle.

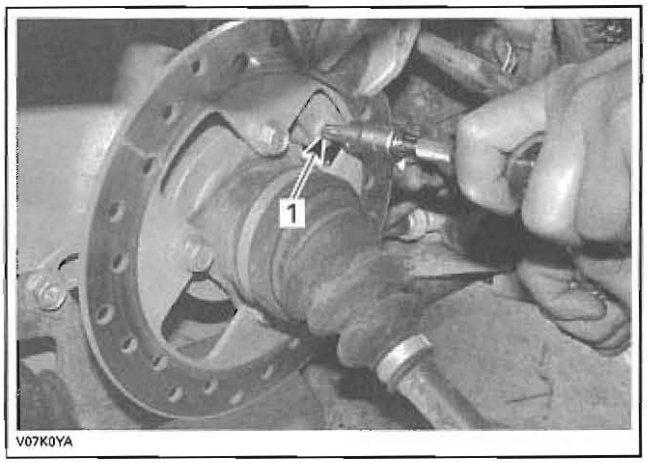

V07K0YA

FRONT CALIPER — OUTLANDER SERIES
1. Retaining screw

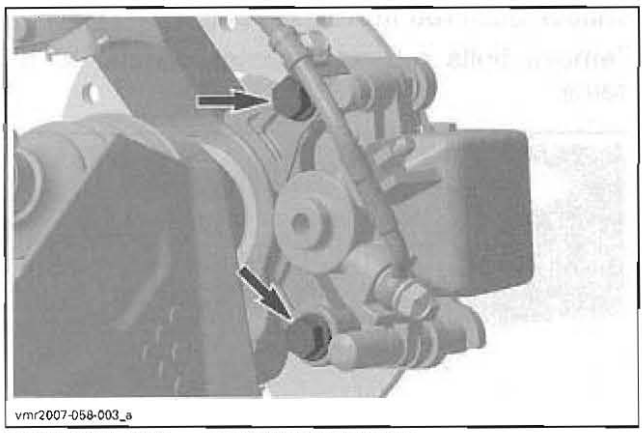
vmr2007-058-003_a

FRONT CALIPER — RENEGADE MODELS

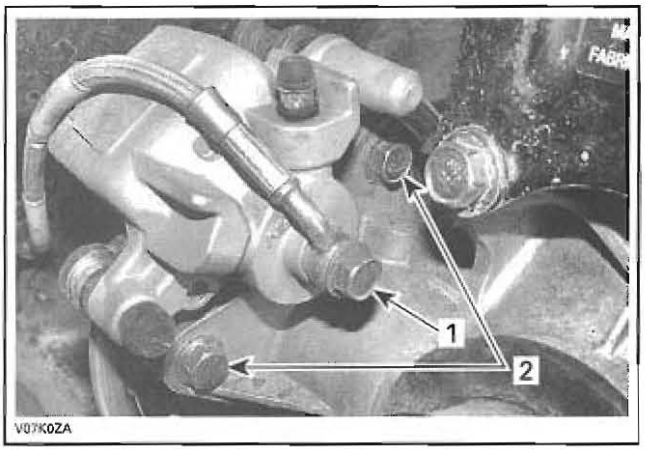

V07K0ZA

REAR CALIPER — ALL MODELS
1. Remove banjo fitting and sealing washers
2. Unscrew bolts

Catch spilled fluid with a rag. Attach the brake hose in a position to prevent the fluid from flowing out.

Discard all sealing washers.

Caliper Disassembly

Remove brake pads, see further in this section.

www.midwestmanuals.com

Remove slide caliper support and pad spring.

Place rag over piston.

Place caliper body with piston down and apply small squirts of air pressure to the fluid inlet to remove piston.

⚠ WARNING

Do not use high pressure air or bring nozzle too close to inlet.

Remove piston seal.

⚠ CAUTION Be careful not to damage piston sliding surface.

Clean piston grooves, caliper cylinder and piston with clean brake fluid.

Clean slide pins with brake cleaner and a rag.

Caliper Inspection

If boots are deteriorated or hard, replace the caliper.

Check caliper cylinder for scratches, rust or other damages. If so, replace caliper.

Check piston for scratches, rust or other damages. If so, replace caliper.

Caliper Assembly

Coat piston seal with clean brake fluid and install it into piston grooves in caliper.

Coat piston with clean brake fluid and install into cylinder with the closing toward caliper body.

Apply DIELECTRIC GREASE (P/N 293 550 004) into sliding bores and install slide pins.

NOTE: Make sure that rubber boots are correctly installed in slide pins grooves.

Install pad spring, caliper bracket and pads.

Caliper Installation

For the installation, reverse the removal procedure, pay attention to the following details.

Use NEW sealing washers when installing banjo fitting retaining brake hose to caliper.

Install caliper in its original position.

Torque screws in accordance with the following table.

MODELS	TORQUE
OUTLANDER SERIES	34 N•m (25 lbf•ft)
RENEGADE MODELS	24 N•m (18 lbf•ft)

Bleed the brake system.

Check for leaks and make sure the brakes operate normally before driving.

BRAKE PADS

Brake Pads Removal

Raise vehicle and support it securely.

Remove appropriate wheel.

Loosen pad pins.

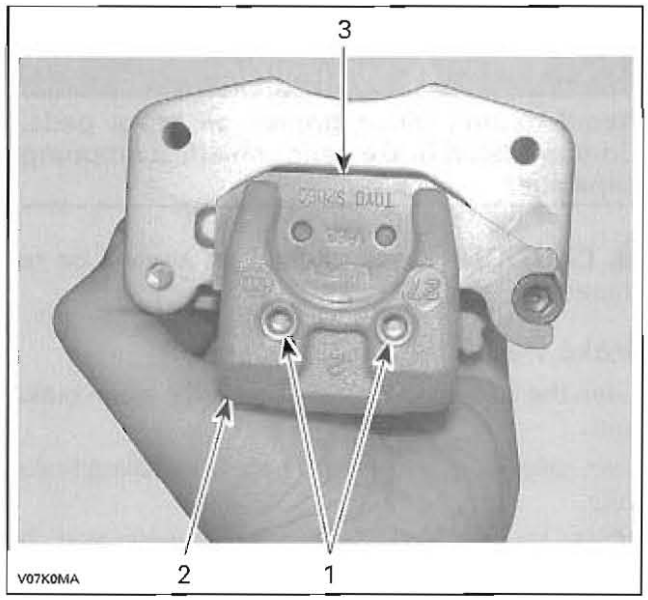

1. Pad pins
2. Caliper
3. Pad

Remove caliper from its support or from knuckle.

Unscrew pad pins then remove pads. Discard pad pins.

⚠ CAUTION Do not let the caliper hang by the hose and do not stretch or twist the hose.

Brake Pads Inspection

⚠ CAUTION Do not clean brake pads in petroleum based solvent. Use brake system cleaner only. Soiled brake pads must be replaced with new ones.

Measure brake pad lining thickness.

Brake pads must be replaced when lining is 1 mm (1/32 in) thick or less, or look the hollow places on both sides on the pad lining.

There are four hollow places on one set of brake pads. When the pad wear reaches one of the hollow places, the pad must be changed even if the pad wear does not reach another hollow place.

www.midwestmanuals.com

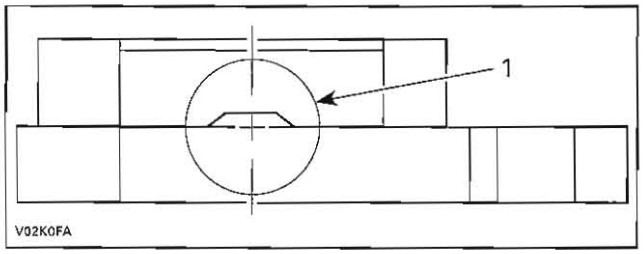

1. Hollow place

BRAKE PAD MINIMUM THICKNESS	1 mm (1/32 in)

⚠ WARNING

Avoid getting oil or grease on brake pads. Contaminated brake pads can affect stopping capacities.

⚠ CAUTION Brake pads must always be replaced in pairs.

Brake Pads Installation

Clean the visible portion of piston with clean brake fluid.

Push caliper pistons inward before installing brake pads.

NOTE: Use a C-clamp or another suitable tool. To avoid damaging the piston, use an old pad to push it into the caliper.

Make sure that pad spring is in position.

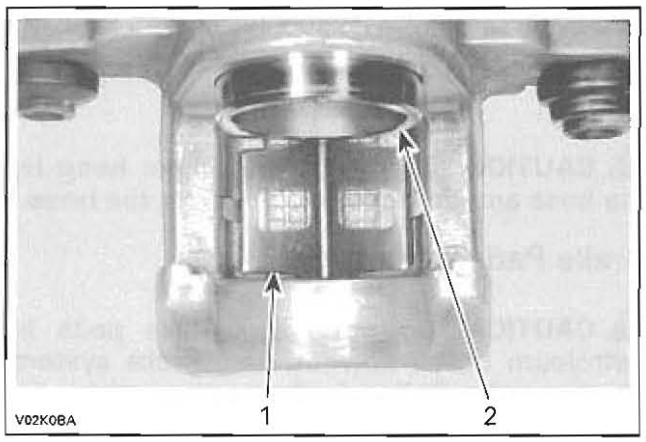

1. Pad spring
2. Piston

Install new brake pads.

Install NEW pad pins by pushing in the pads against pad spring to align pad slots in the pads and caliper body.

Install brake caliper so the disc is positioned between pads.

NOTE: Be careful not to damage pads and make sure pads are correctly inserted in their location.

After the job is completed, firmly depress the brake lever a few times to bring the pads in contact with the disc.

Check for leaks and make sure the brakes operate normally before driving. The pads must rest flat on the disk.

BRAKE DISC

Brake Disc Inspection

Brake discs can be inspected without removing them from the vehicle.

Raise vehicle and support it securely. Remove wheels and visually inspect disc surfaces for scratches or grooves. Make sure to check both sides of disc.

Measure thickness of the disc.

DISC MINIMUM THICKNESS	
FRONT	3.5 mm (.138 in)
REAR	4.3 mm (.169 in)

Replace disc if not within specifications.

⚠ CAUTION Brake discs should never be machined.

Turn the disc by hand and check warpage.

MAXIMUM DISC WARPAGE	
FRONT	0.2 mm (.01 in)
REAR	

Brake Disc Removal

Front Brake Disc

Outlander Series

Apply parking brake and raise the front of the vehicle.

Remove the appropriate wheel.

Remove wheel hub. Refer to *FRONT DRIVE*.

On **Outlander 650 and 800 series**, remove the shock absorber.

Separate knuckle from lower suspension arm.

Remove drive shaft from knuckle.

Attach upper suspension arm or strut out of way.

Unscrew brake disc screws.

Keep the Belleville washers.

www.midwestmanuals.com

Release parking brake and remove caliper. Suspend caliper out of the way.

⚠ CAUTION Do not let the caliper hang by the hose and do not stretch or twist the hose.

Remove brake disc. Pay attention not to cut the CV boot.

Renegade Models

Remove appropriate wheel.

Remove caliper as described previously. Do not disconnect brake hose from caliper.

After removing the caliper, suspend it out of the way.

⚠ CAUTION Do not let the caliper hang by the hose and do not stretch or twist the hose.

Remove wheel hub with brake disc. Refer to *FRONT DRIVE*.

Heat up brake disc around screw to break the threadlocker. Remove and discard brake disc screws.

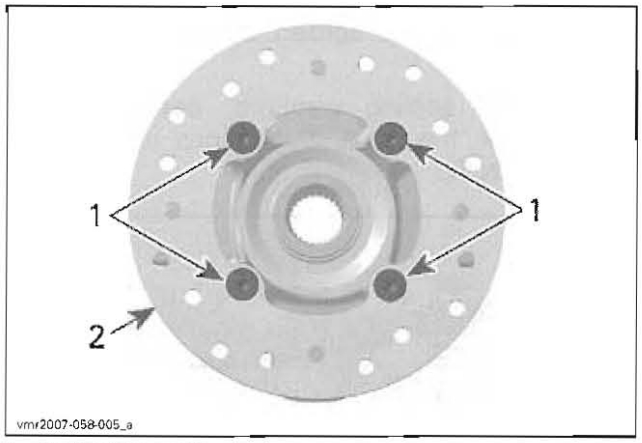

1. *Brake disc screws*
2. *Brake disc*

Rear Brake Disc

Remove rear wheels.

Remove the caliper and suspend it out of the way.

⚠ CAUTION Do not let the caliper hang by the hose and do not stretch or twist the hose.

Unscrew and remove the rear propeller shaft screw from differential.

Remove the differential protector.

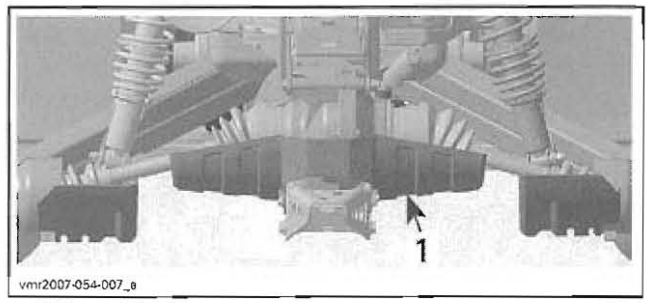

1. *Differential protector*

Remove the differential bolts.

Loosen hitch plate bolts.

Move the differential backward.

Disconnect propeller shaft from differential.

Unscrew brake disc screws. Heat up brake disc around screws to facilitate removal. Discard brake disc screws.

Brake Disc Installation

Front Brake Disc

Renegade Models

The installation is the reverse of the removal procedure.

Outlander Series

The installation is the reverse of removal procedure. However, pay attention to the following details.

Do not forget Belleville washers when installing brake disc screws. Place the concave side of washers towards brake disc.

⚠ WARNING

Never substitute Belleville washer with another type of washer (flat, lock, etc.).

Tighten brake disc screws to 38 N•m (28 lbf•ft) in a criss-cross sequence.

Rear Brake Disc

All Models

Install brake disc on propeller shaft and tighten NEW screws to 34 N•m (25 lbf•ft) in a criss-cross sequence.

BRAKE PEDAL

Brake Pedal Removal

Remove RH footwell.

Detach the return spring from the brake pedal.

Open the master cylinder push rod hook.

www.midwestmanuals.com

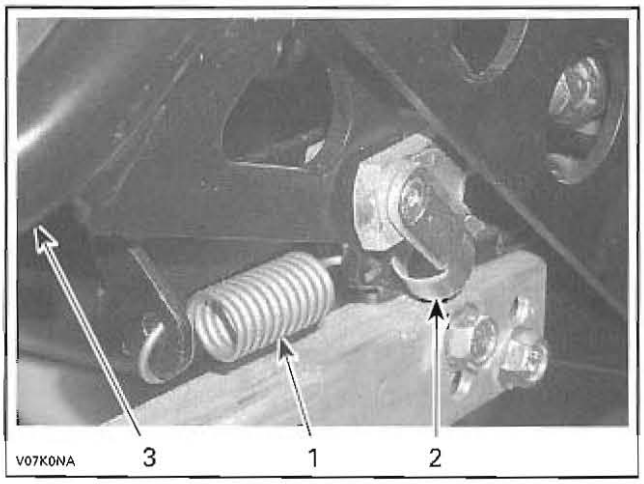

1. Return spring
2. Push rod hook
3. Brake pedal

Remove bolt retaining the brake pedal to frame.

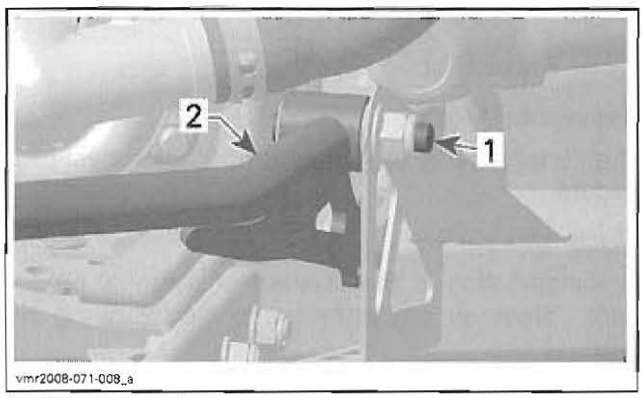

1. Brake pedal bolt
2. Brake pedal

Brake Pedal Inspection

Check brake pedal for cracks or distortion.

Check if O-rings are brittle, hard or otherwise damaged.

Replace any defective parts.

Brake Pedal Installation

For installation, reverse the removal procedure.

Apply XP-S SYNTHETIC GREASE (P/N 293 550 010) on both O-rings and into brake pedal.

BRAKE CIRCUIT SPLITTERS (RENEGADE CE MODELS)

Brake Circuit Splitters Removal

Remove LH or RH inner fender. Refer to *BODY* section.

Drain brake fluid. Refer to *BRAKE FLUID DRAINING* at the beginning of this section.

Remove all brake hoses from the splitter and discard sealing washers.

⚠ CAUTION When hoses are disconnected, cleanliness must be observed. Clean all parts before disassembly.

To remove the LH splitter, unplug the brake light switch connector.

Unscrew splitter retaining screws. Do not remove screws yet.

Place your hand under the splitter to catch both shims. Shims are located between splitter and frame.

Pull the splitter to remove it.

Wipe up any brake fluid spillages.

Brake Circuit Splitters Installation

The installation is the reverse of the removal procedure. However, pay attention to the following.

Install shims behind splitters.

Apply LOCTITE 243 (BLUE) (P/N 293 800 060) on threads of splitter screws.

Install splitters and tighten screws to 10 N•m (89 lbf•**in**).

Using **NEW** sealing washers, connect brake hoses. Use the next illustrations to position hoses correctly.

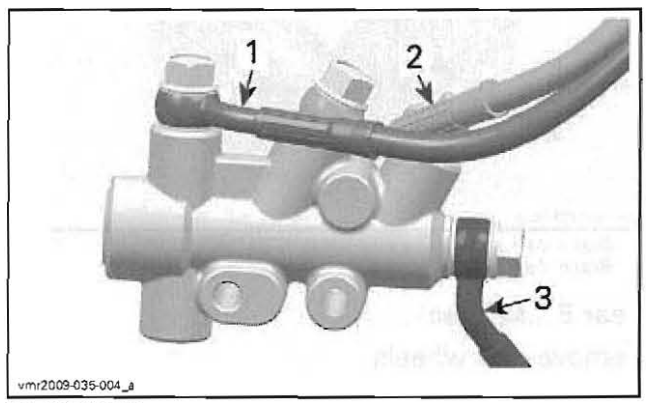

RH SPLITTER
1. Toward front calipers
2. From RH lever
3. From LH splitter

www.midwestmanuals.com

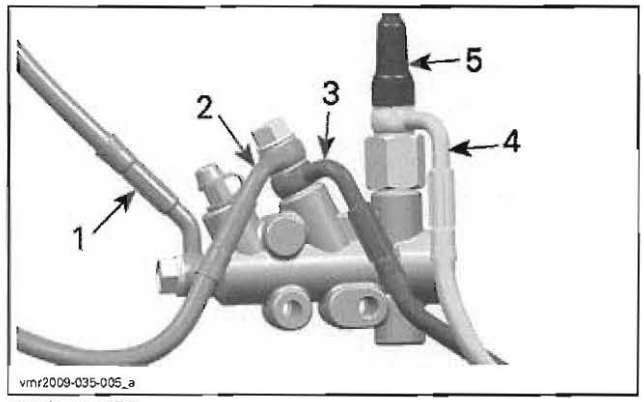

LH SPLITTER
1. *From LH lever*
2. *From RH splitter*
3. *From rear master cylinder*
4. *Toward rear caliper*
5. *Brake light switch*

Tighten all Banjo fittings to 28 N•m (21 lbf•ft).

Refill and bleed the system. Refer to *BRAKE FLUID* at the beginning of this section.

Connect the brake light switch.

Install all other removed parts.

BRAKE HOSES

Brake Hoses Inspection

Brake hoses should be inspected frequently for leaks and damages.

Check if the hoses are crushed or damaged. Any deformation can restrict the proper flow of fluid and cause braking problems.

Check hoses for cracking or scrapes. This damage can cause hose failure under pressure.

When hoses are removed or disconnected, cleanliness must be observed. Clean all joints and connections before disassembly. New hoses should be cleaned with brake fluid before installation to remove any contamination.

Replace any defective parts.

Brake Hoses Removal

NOTE: Before removing any hoses, drain brake system.

Remove all necessary parts to reach the hoses.

Thoroughly clean the area around the joints that will be disconnected.

Place a drain pan under the joint that will be disconnected.

Disconnect any retaining clips or brackets holding the hose and remove the defective part(s).

Brake Hoses Installation

Install the new hose.

Make sure the piece will not rub against any other part.

When there is a banjo fitting securing the hose to the caliper or to the master cylinder, always replace the sealing washers with new ones.

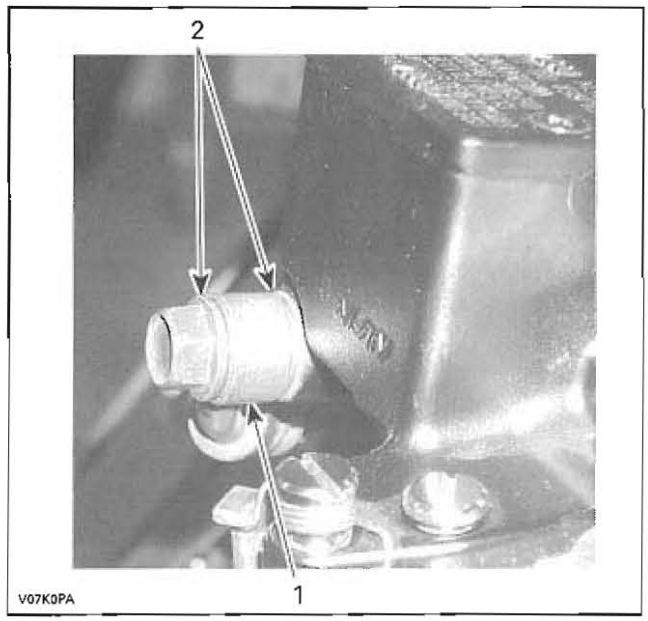

FRONT MASTER CYLINDER SHOWN
1. *Banjo fitting*
2. *Sealing washers*

Install any retaining clips or brackets.

Refill and bleed the system.

www.midwestmanuals.com

www.midwestmanuals.com

BODY

OUTLANDER (500 AND 650)

Body Parts (Front View)

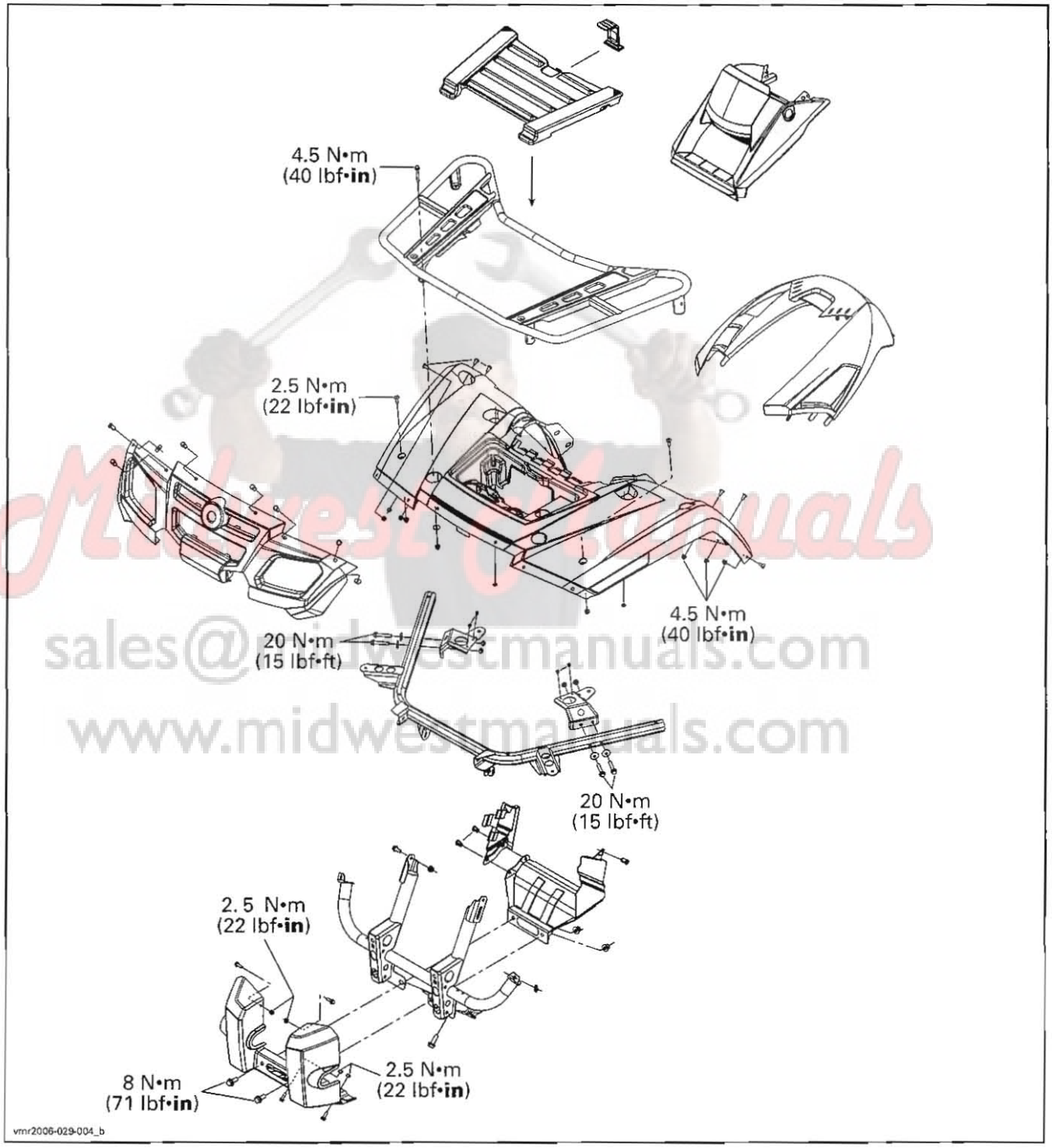

Midwest Manuals
sales@midwestmanuals.com
www.midwestmanuals.com

www.midwestmanuals.com

Body Parts (Rear View)

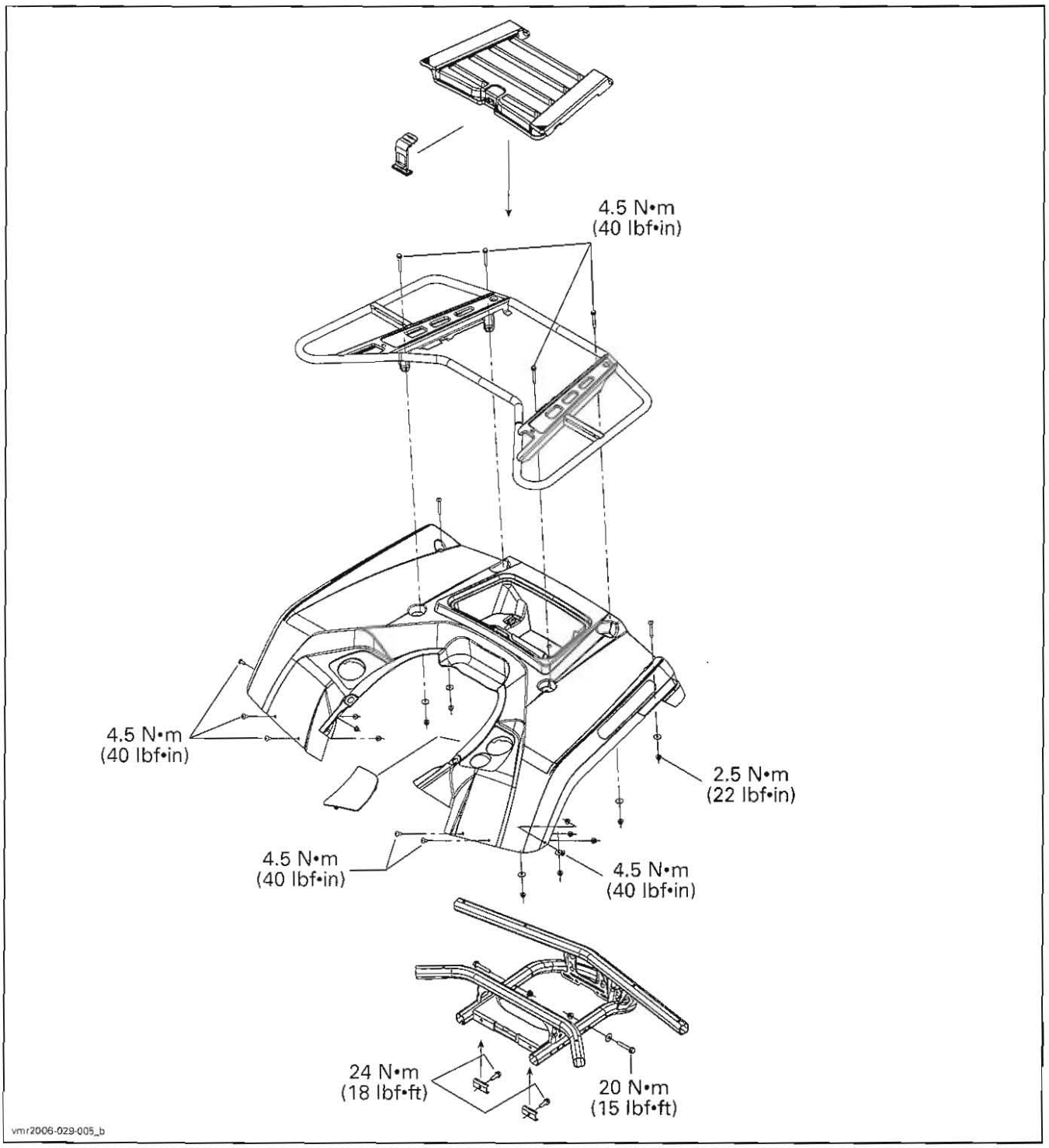

www.midwestmanuals.com

Body Parts (Side View)

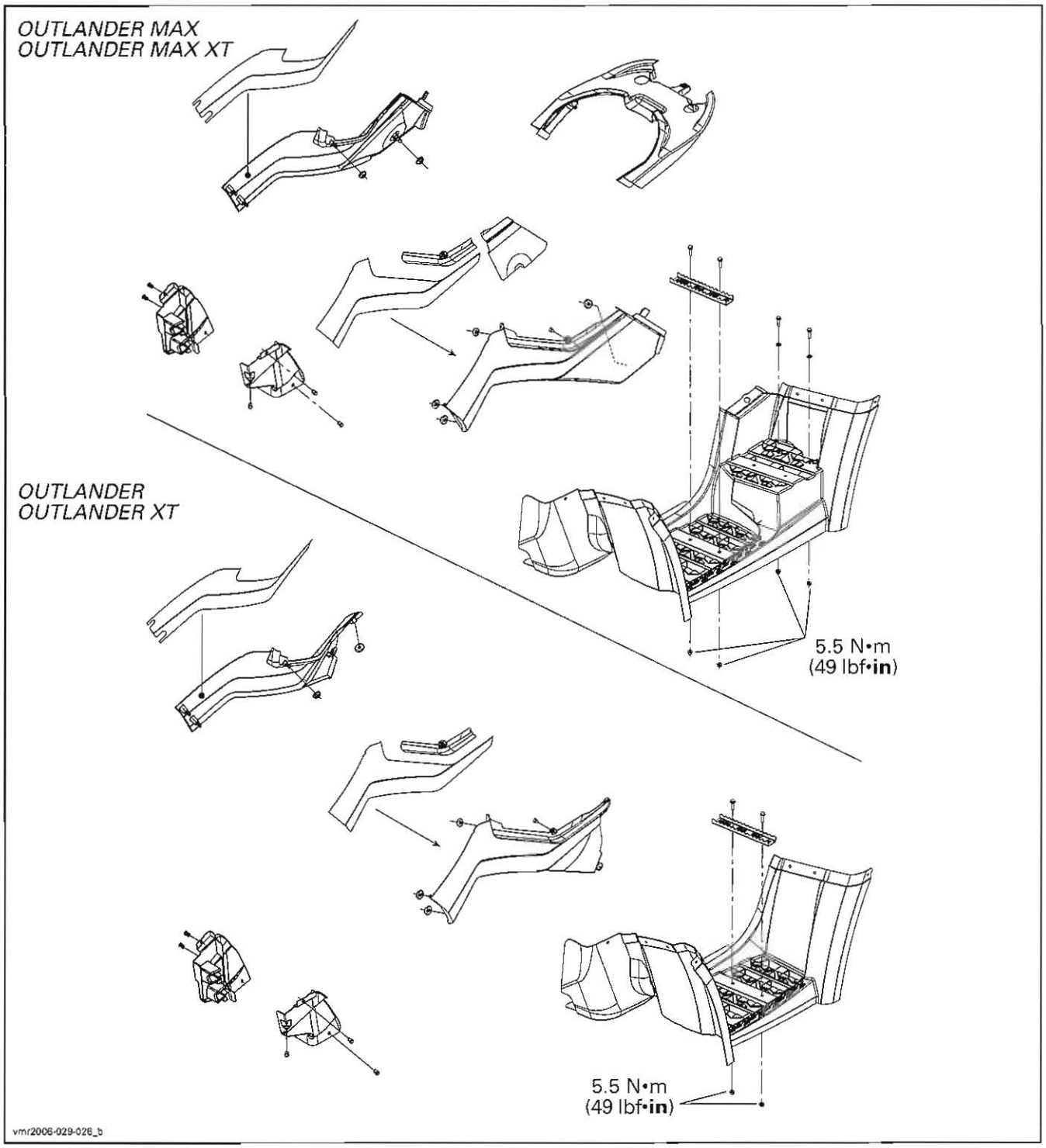

www.midwestmanuals.com

Seat

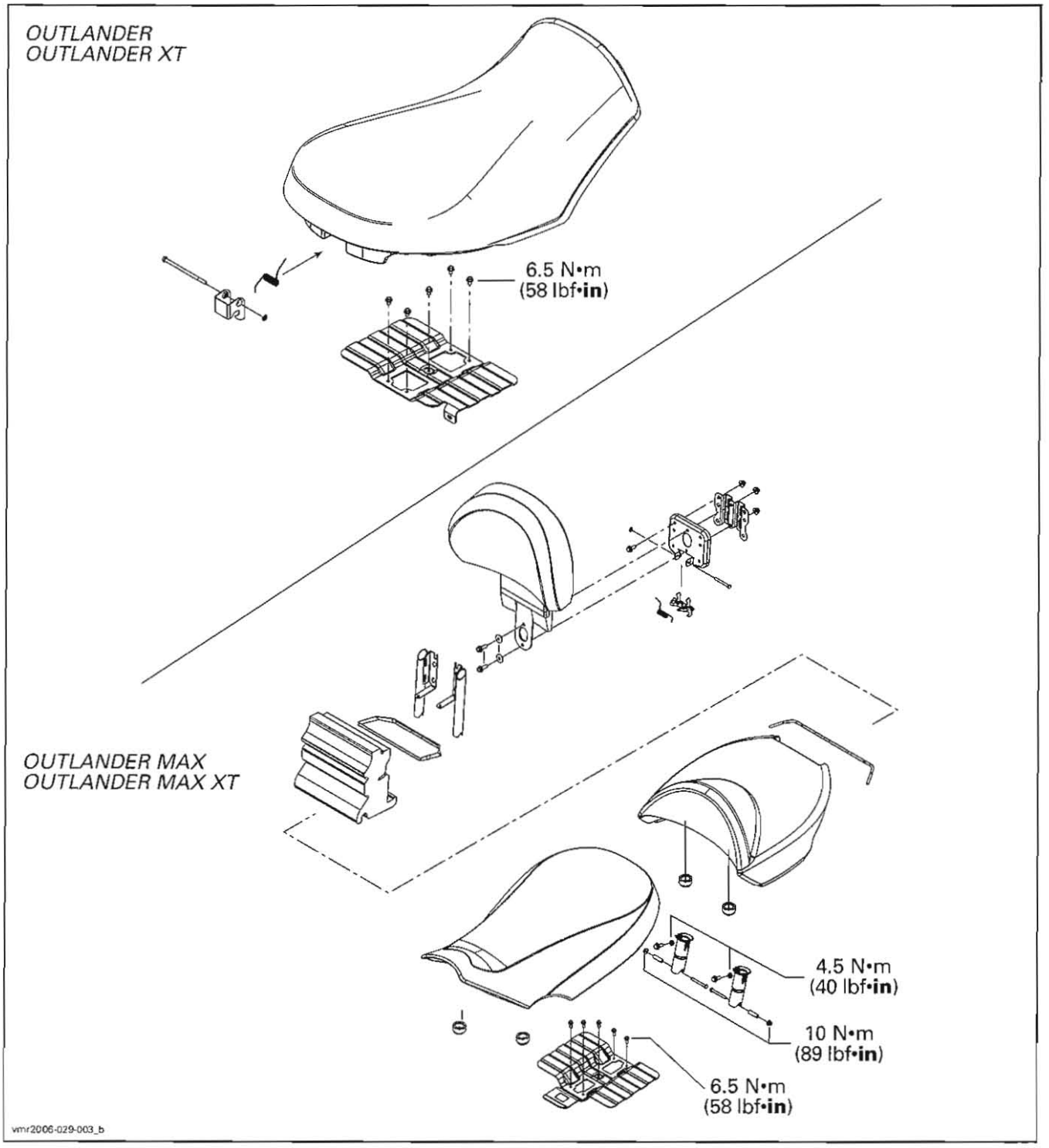

www.midwestmanuals.com

XT Package

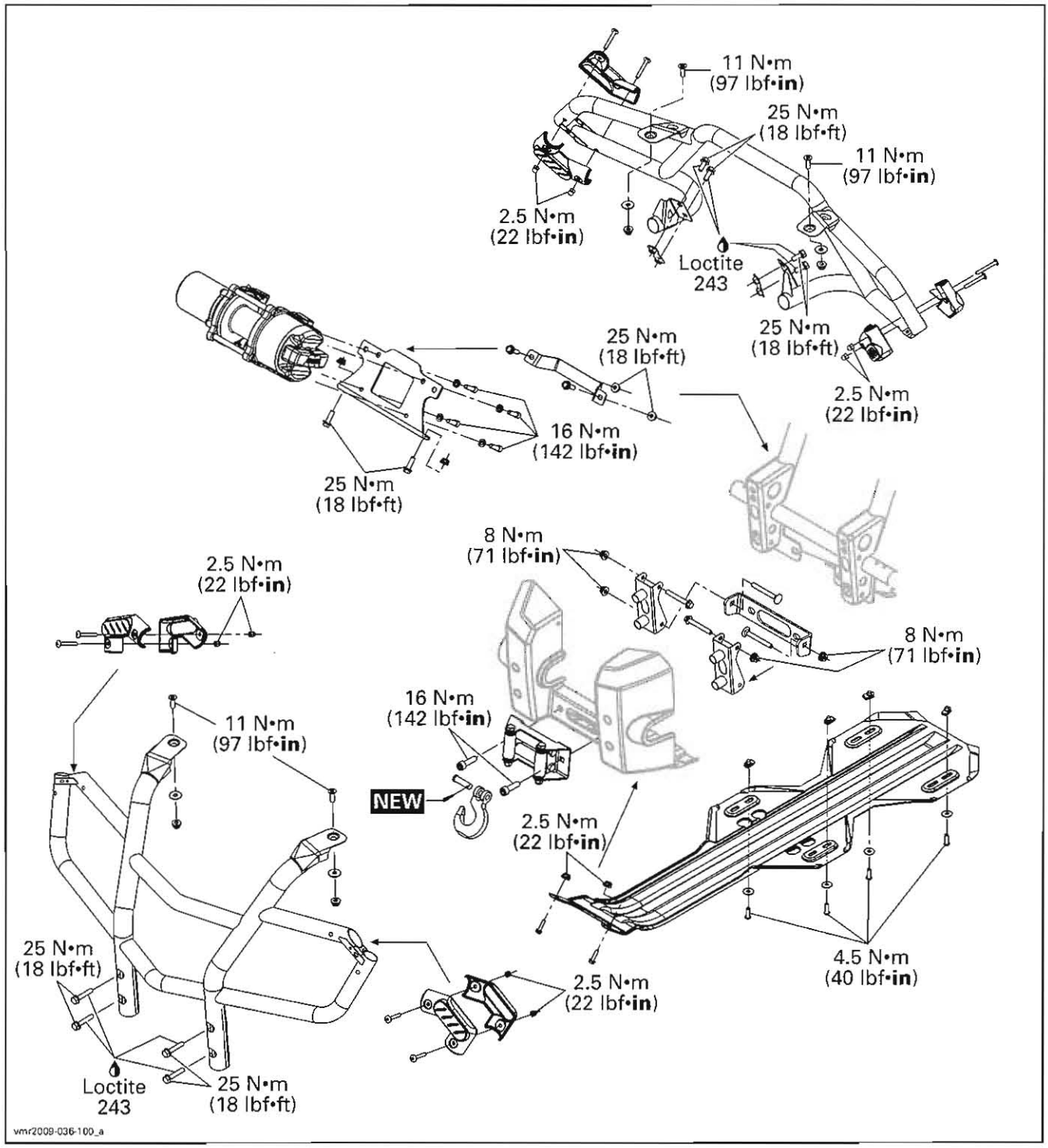

www.midwestmanuals.com

OUTLANDER (800R)

Body Parts (Front View)

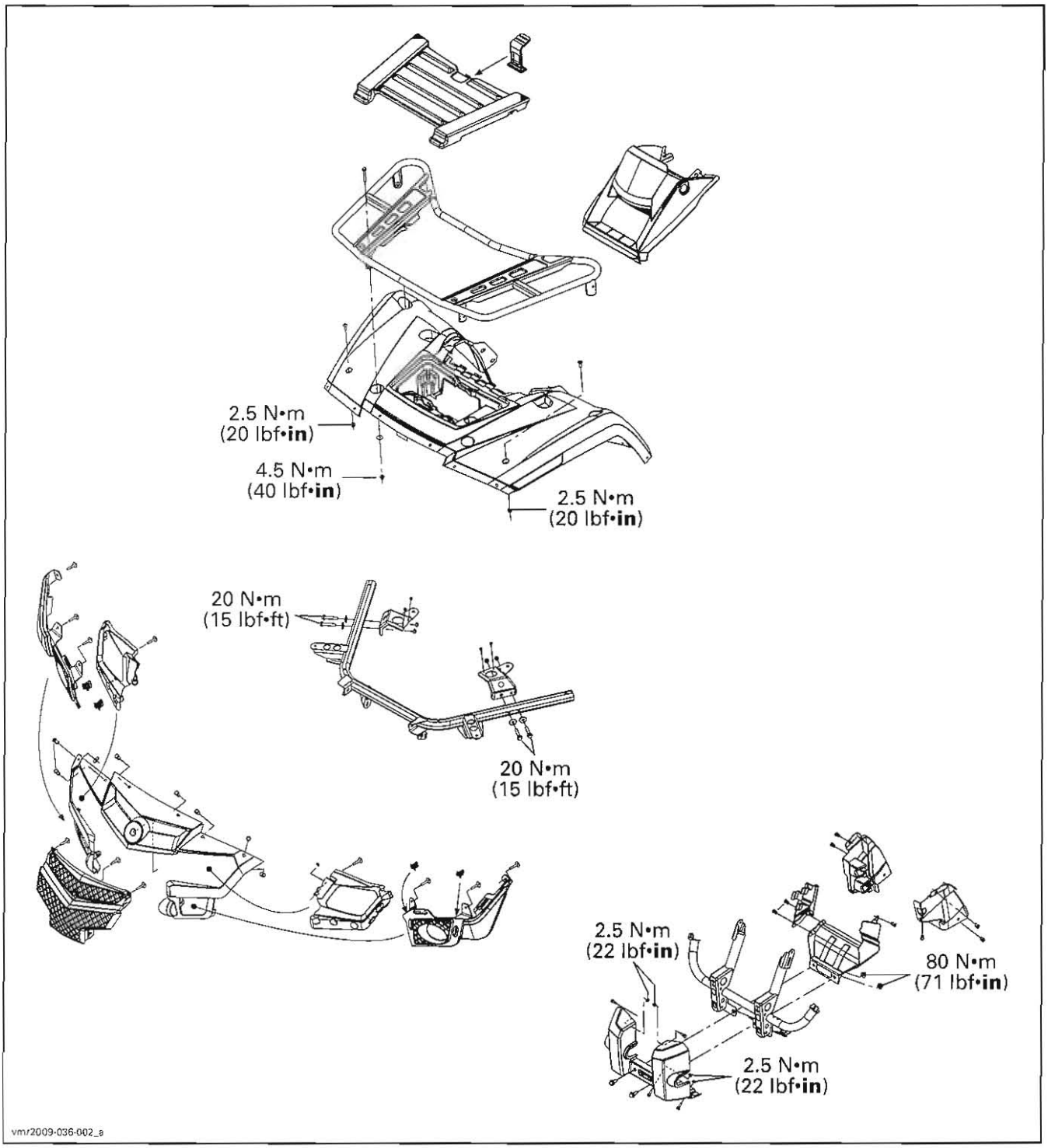

www.midwestmanuals.com

Body Parts (Rear View)

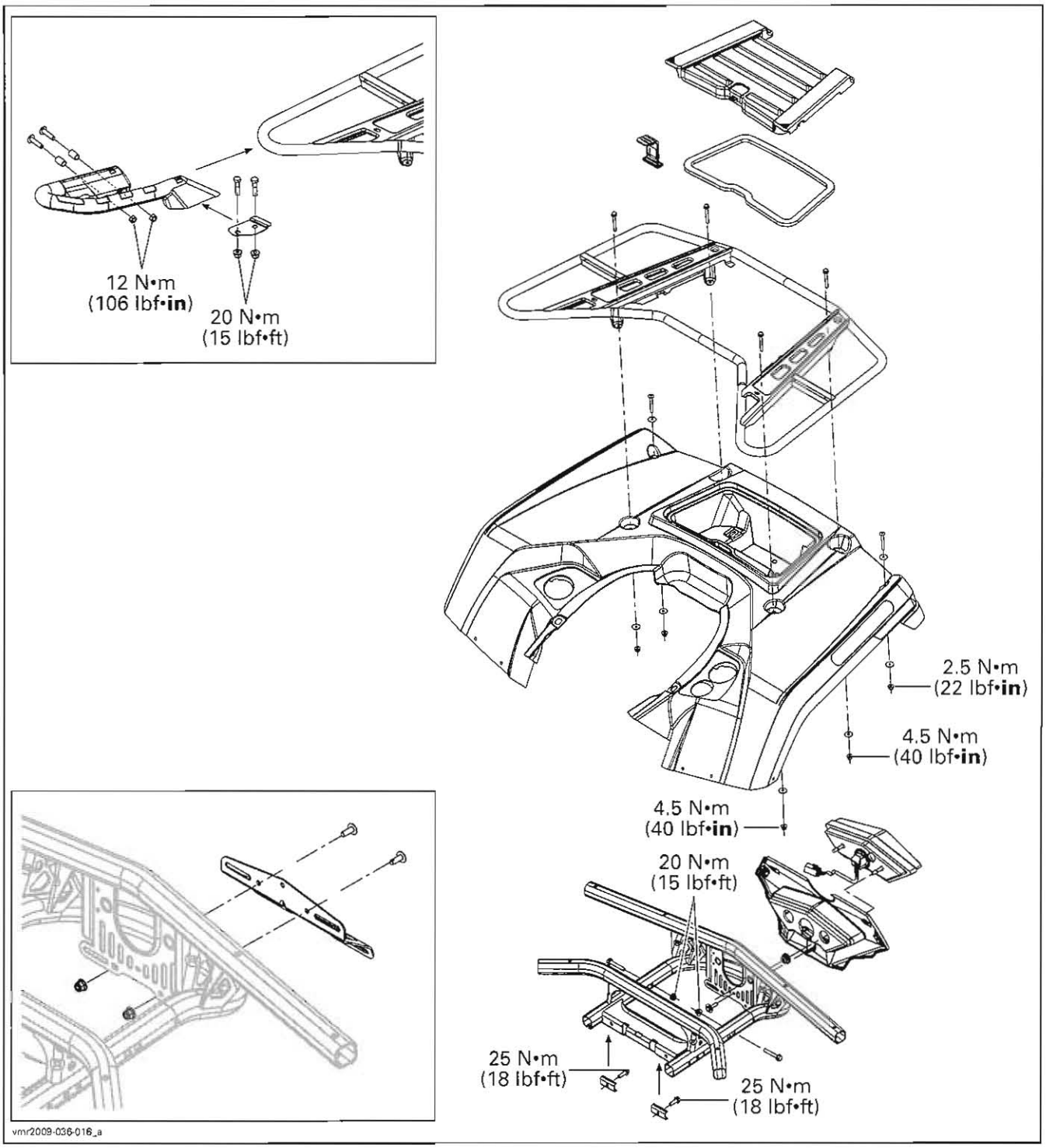

www.midwestmanuals.com

Body Parts (Side View)

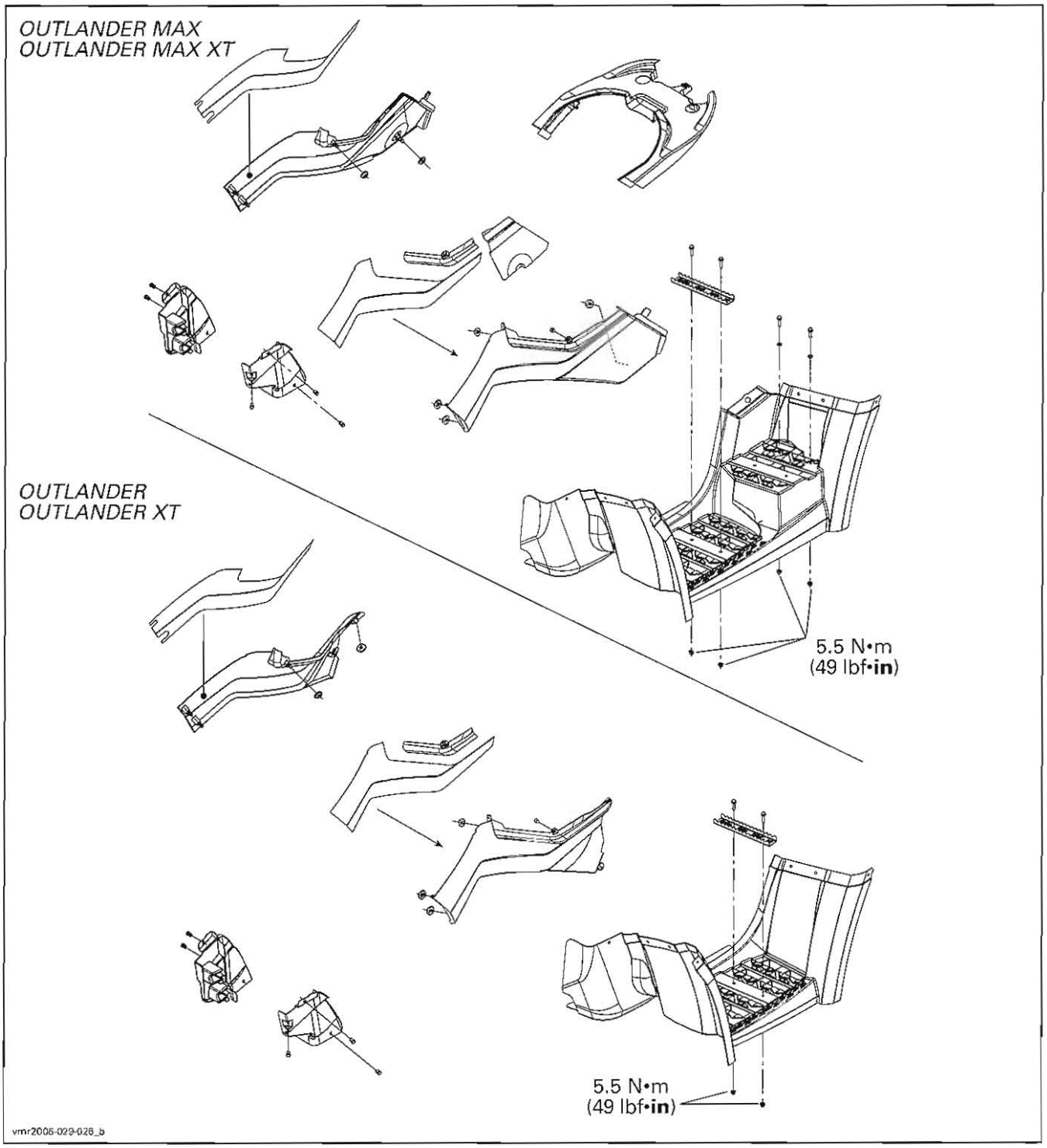

www.midwestmanuals.com

Seat

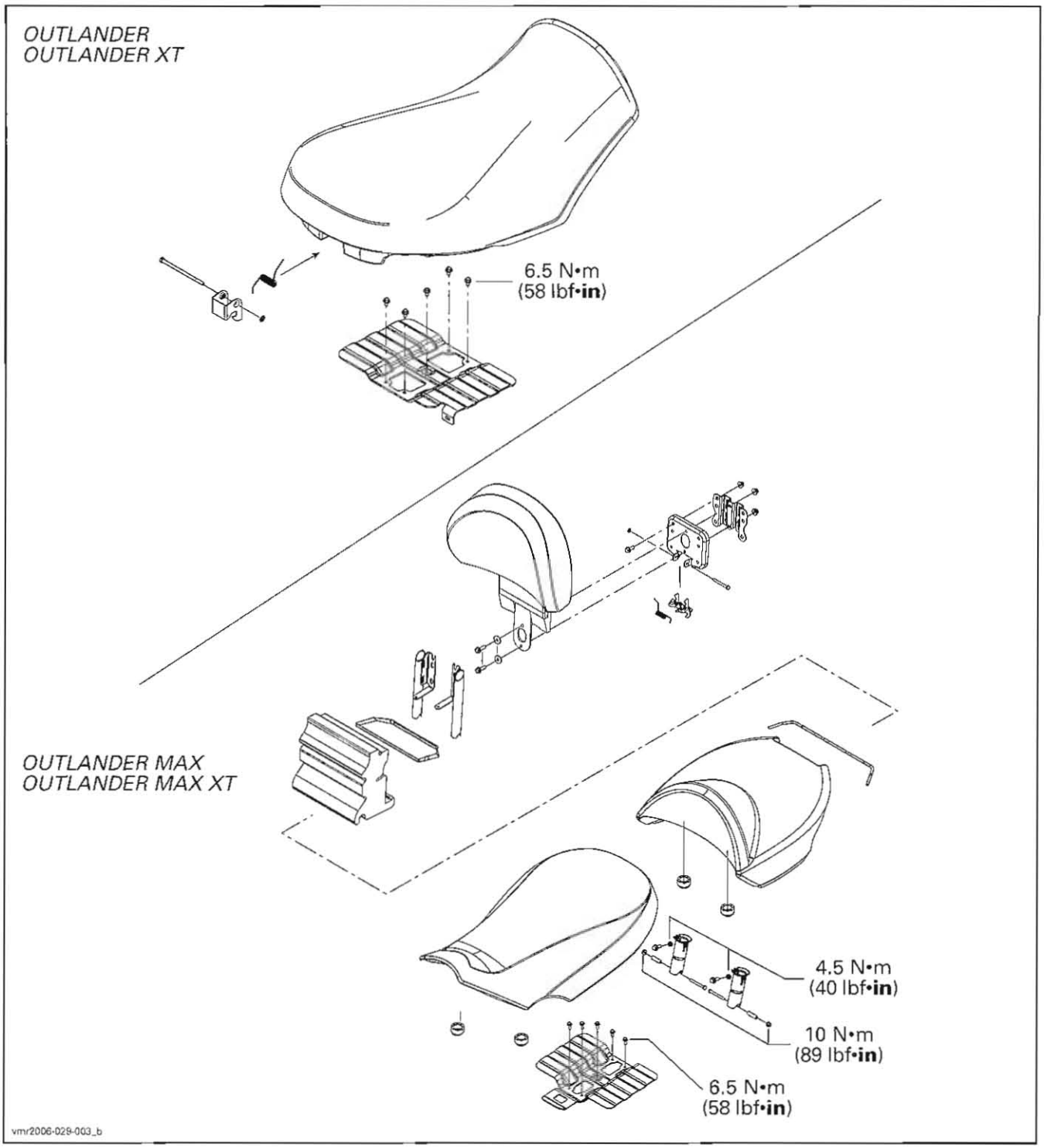

www.midwestmanuals.com

XT Package

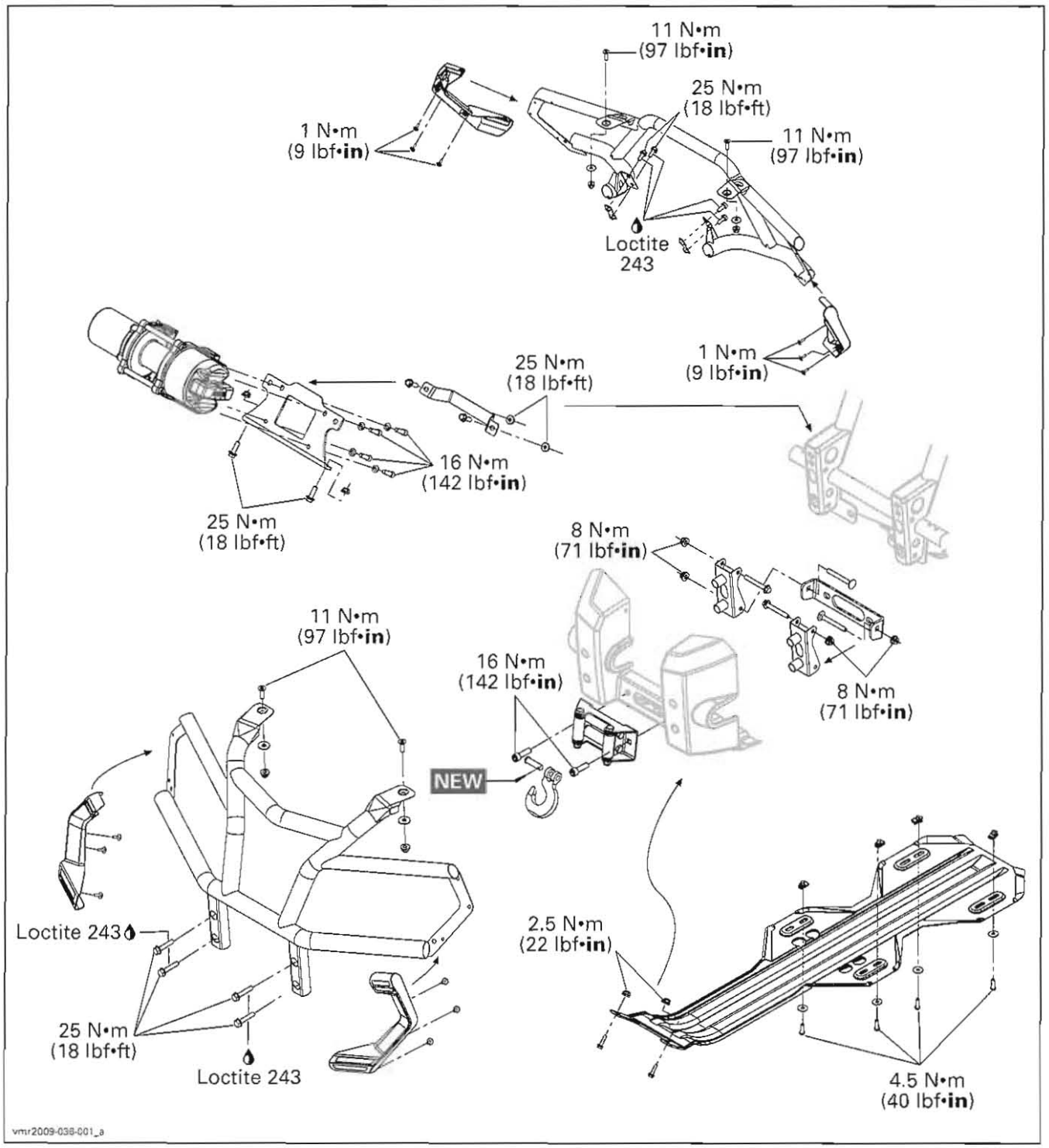

www.midwestmanuals.com

RENEGADE MODELS

Body Parts (Front View)

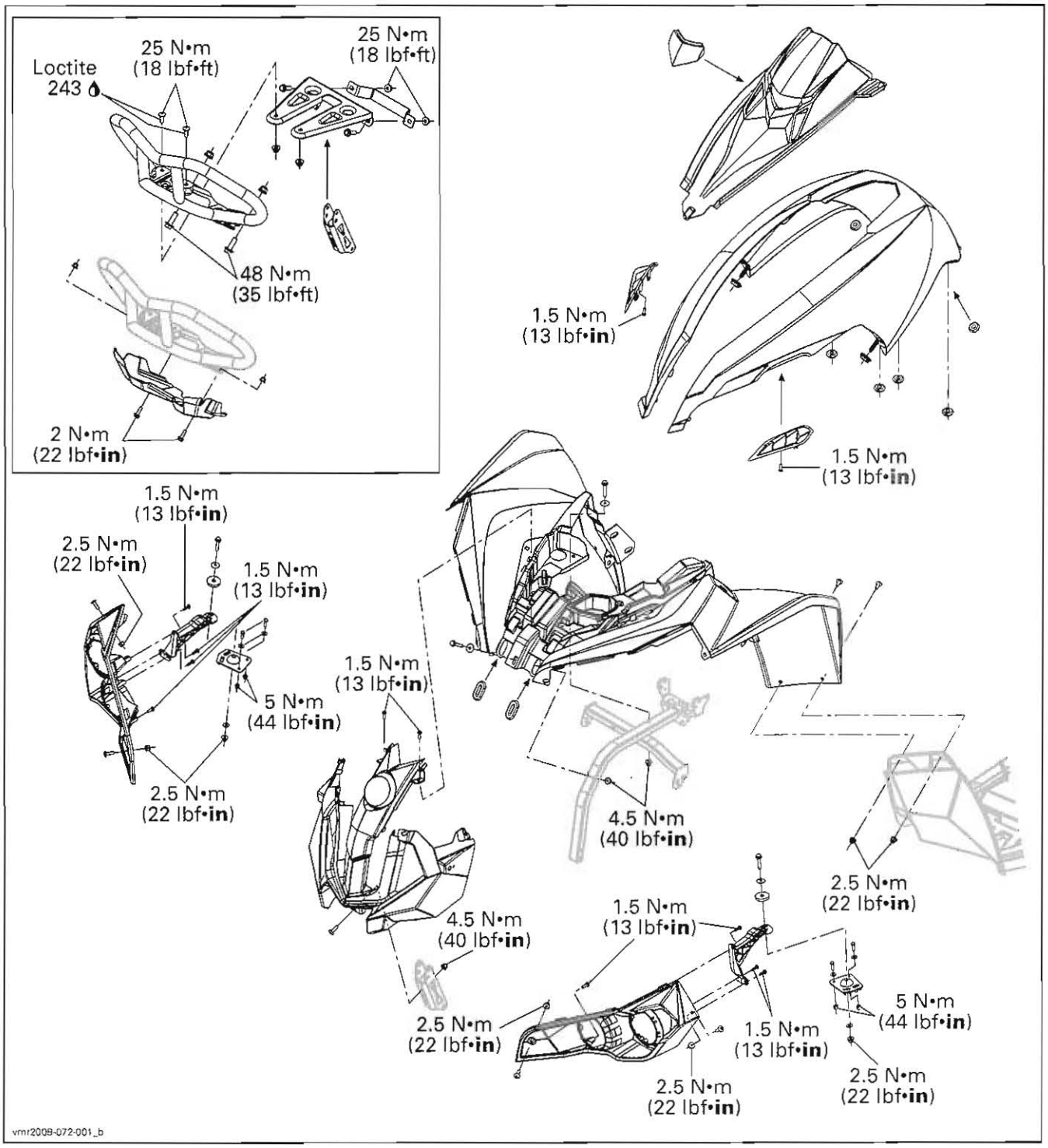

www.midwestmanuals.com

Body Parts (Rear View)

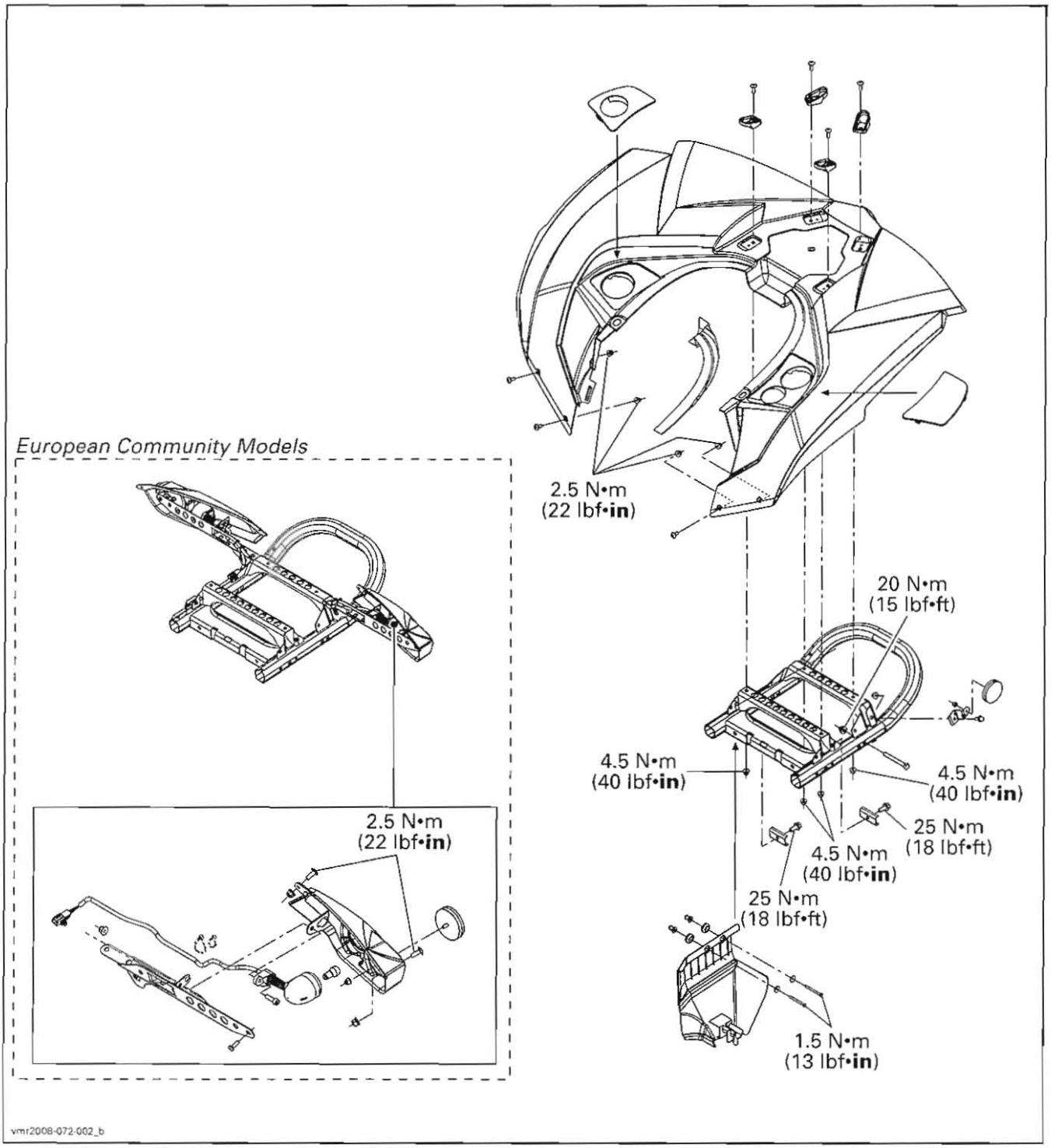

www.midwestmanuals.com

Body Parts (Side View)

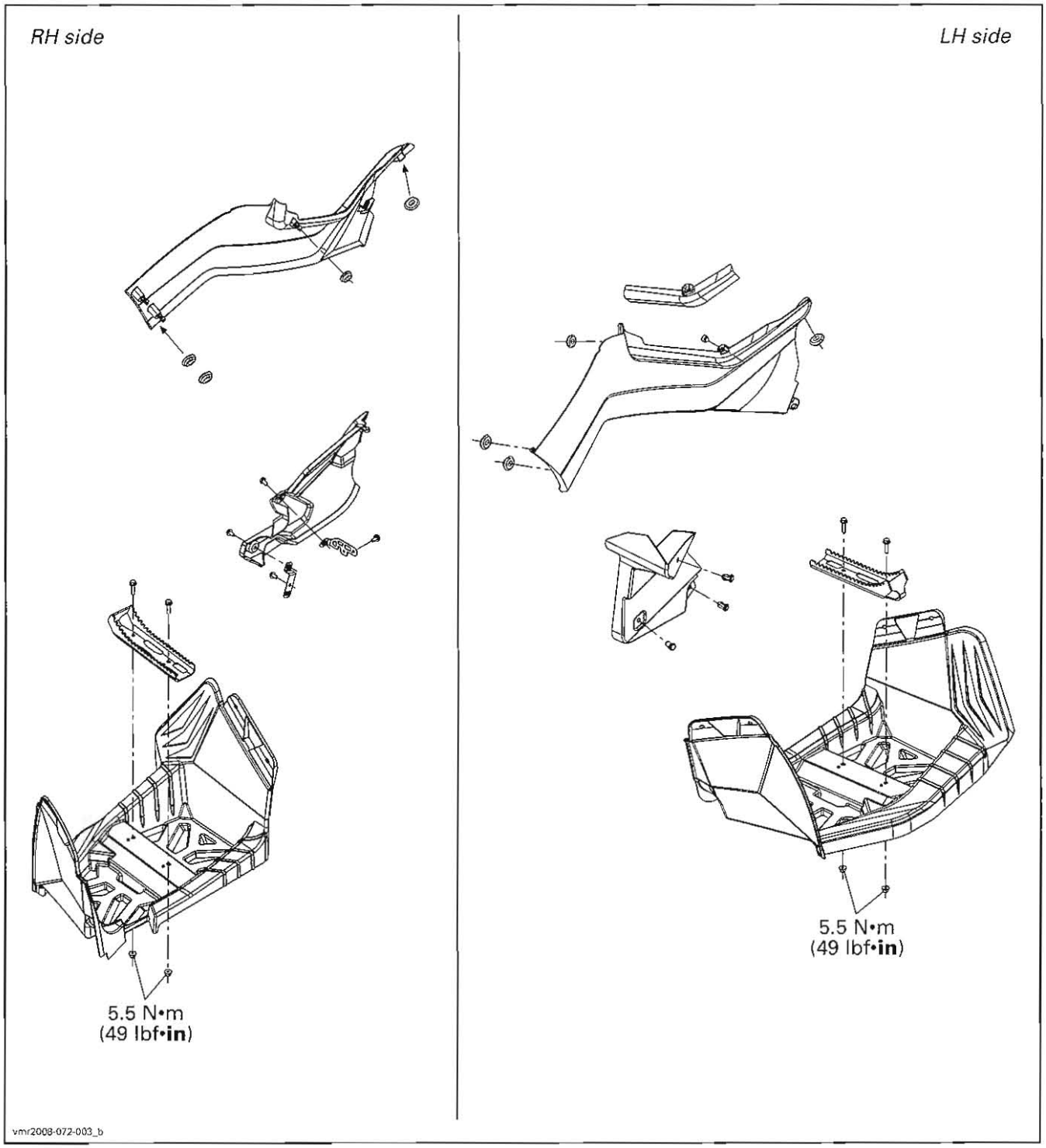

www.midwestmanuals.com

Seat

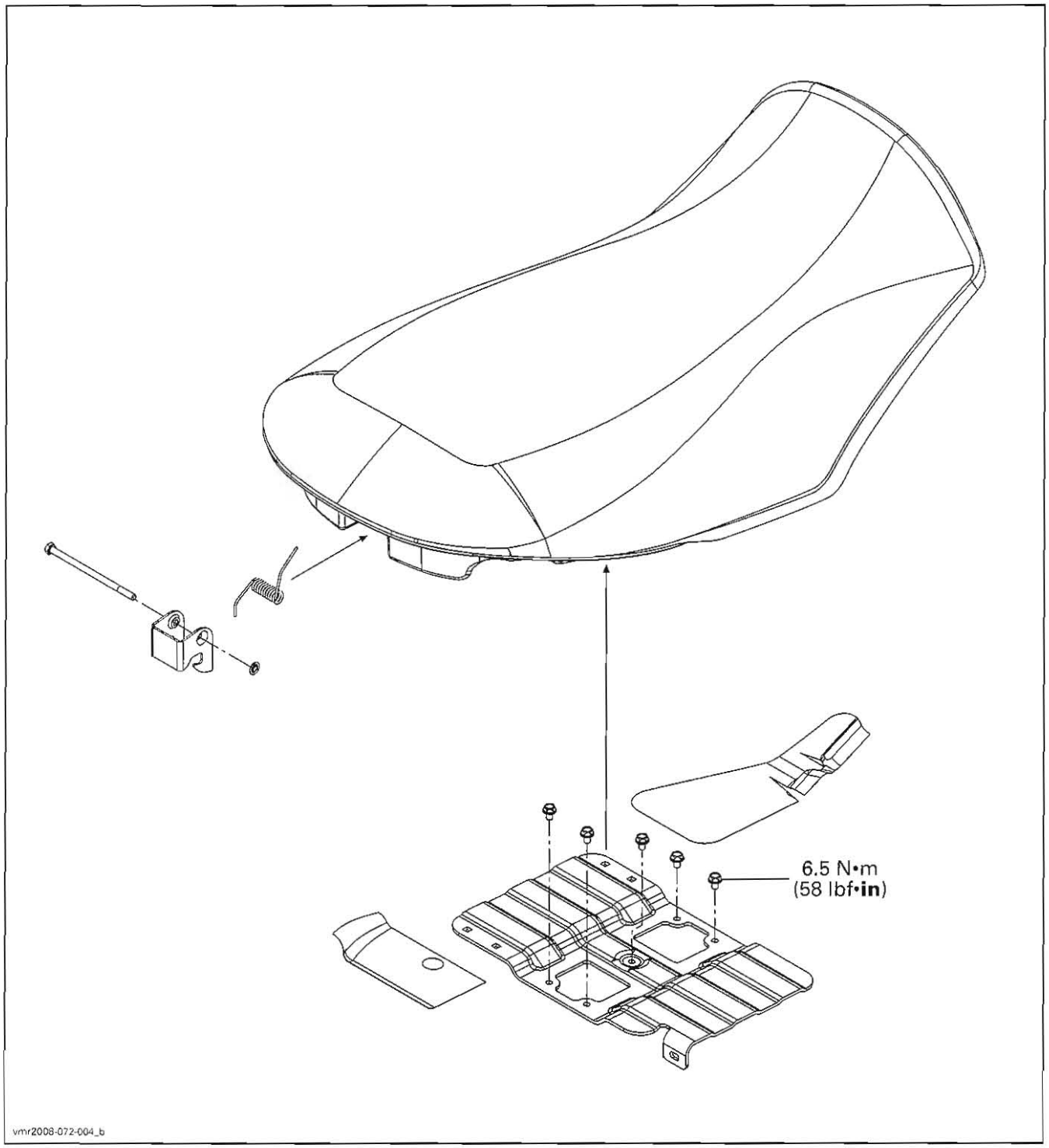

www.midwestmanuals.com

GENERAL

Refer to the *2008 SHOP MANUAL* (P/N 219 100 273) for topics not covered in this section.

PROCEDURES

CENTRAL PANEL

Central Panel Removal

Outlander Series

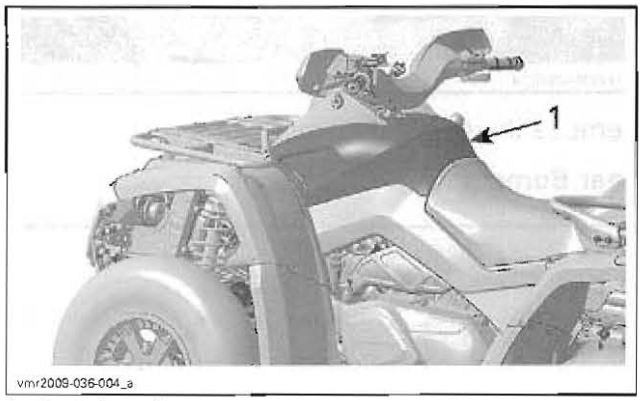

1. Central panel

Remove seat(s).

Come off the plastic studs from the grommets.

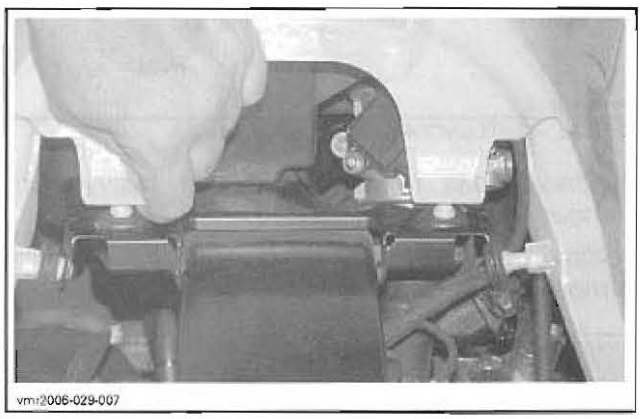

Pull central panel to separate its tabs from front fender.

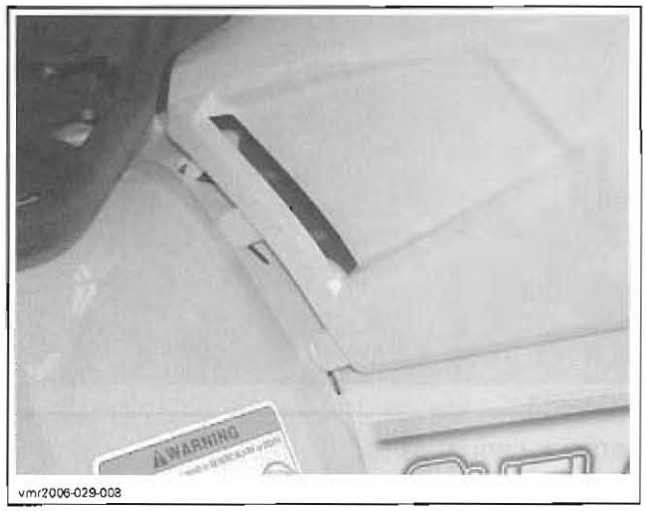

Renegade Models

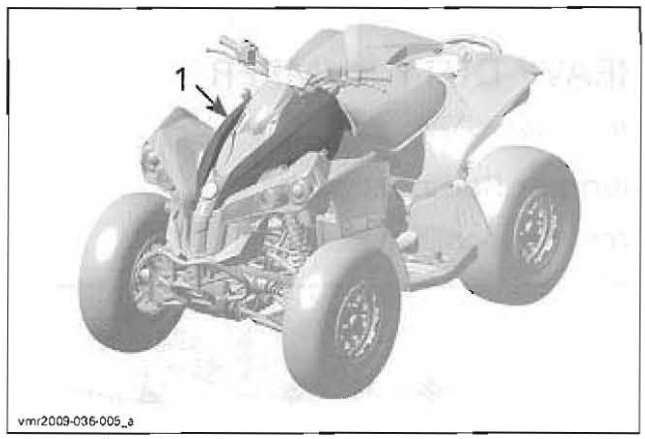

1. Central panel

Remove seat.

Lift the front part of the central panel.

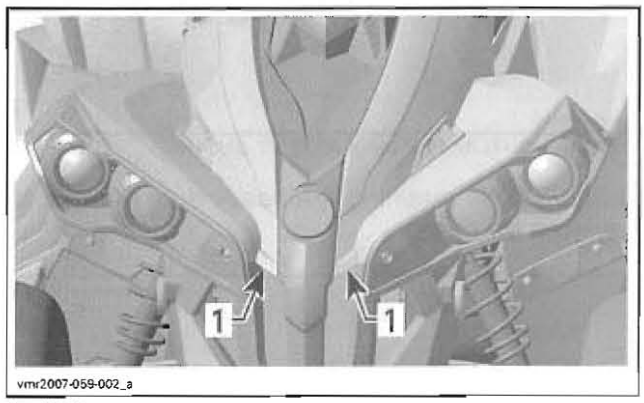

1. Lift here

Come off the plastic studs from the grommets.

www.midwestmanuals.com

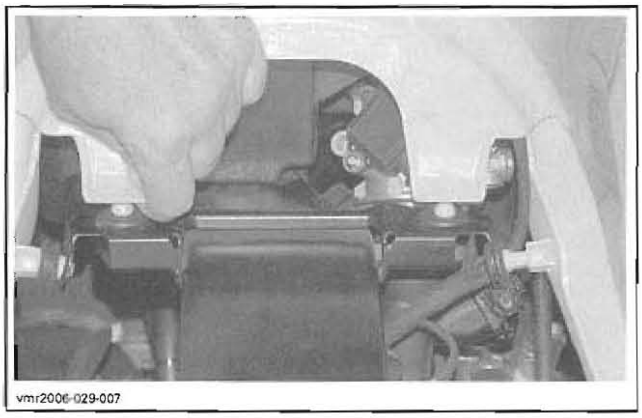
vmr2006-029-007

Remove central panel.

Central Panel Installation

The installation is the reverse of the removal procedure.

HEAVY DUTY BUMPER

Outlander XT Package

Bumper Removal

Front Bumper

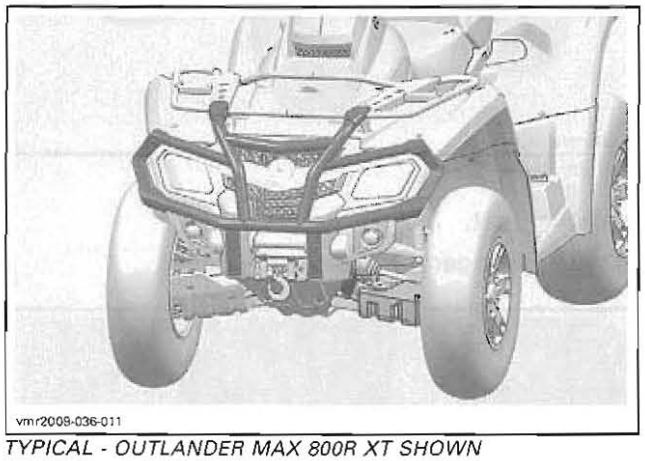
vmr2009-036-011

TYPICAL - OUTLANDER MAX 800R XT SHOWN

Remove bolts retaining the heavy duty bumper to the front bumper.

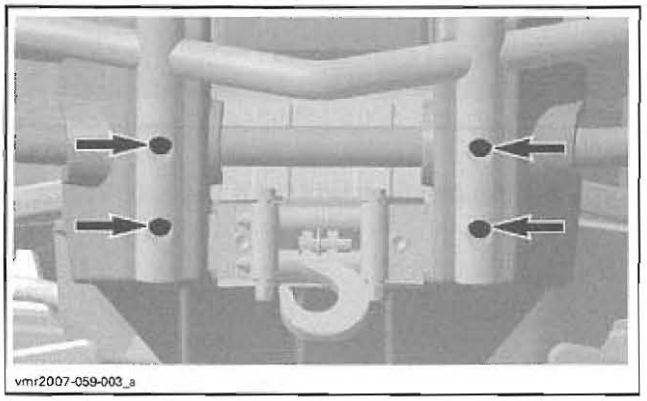
vmr2007-059-003_a

Remove screws that attach the heavy duty bumper to the rack.

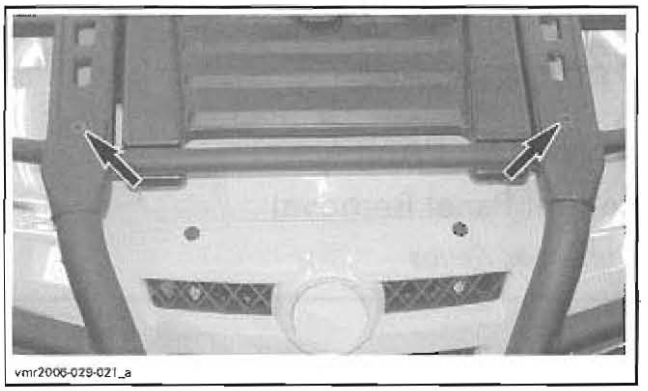
vmr2006-029-021_a

Remove the heavy duty bumper.

Rear Bumper

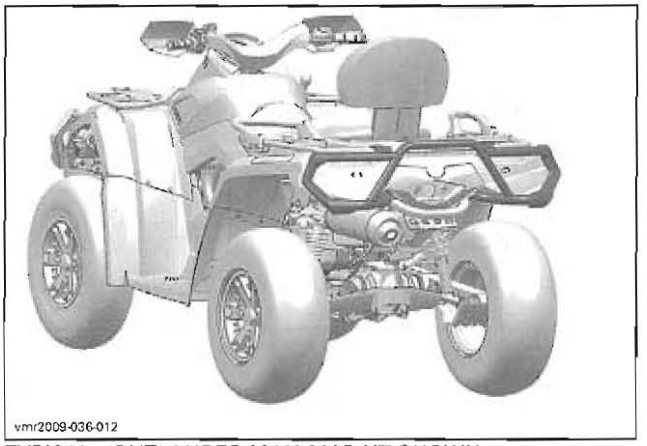
vmr2009-036-012

TYPICAL - OUTLANDER MAX 800R XT SHOWN

Unscrew bolts retaining the rear heavy duty bumper to the rear bumper.

Remove screws that attach the heavy duty bumper to the rack.

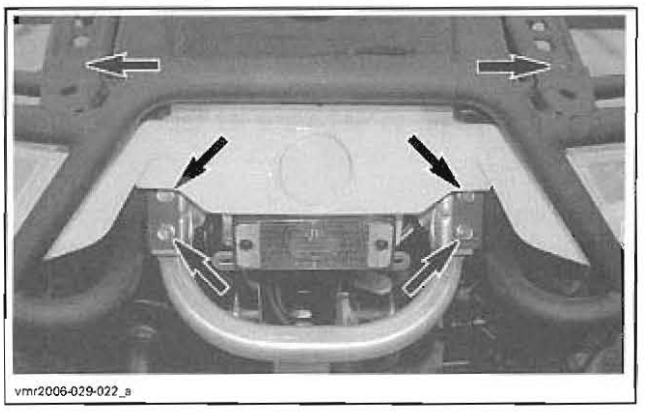
vmr2006-029-022_a

Bumper Installation

The installation is the reverse of the removal procedure.

www.midwestmanuals.com

FRONT BUMPER/FRONT SKID PLATE/FRONT FASCIA

Removal

Outlander Series

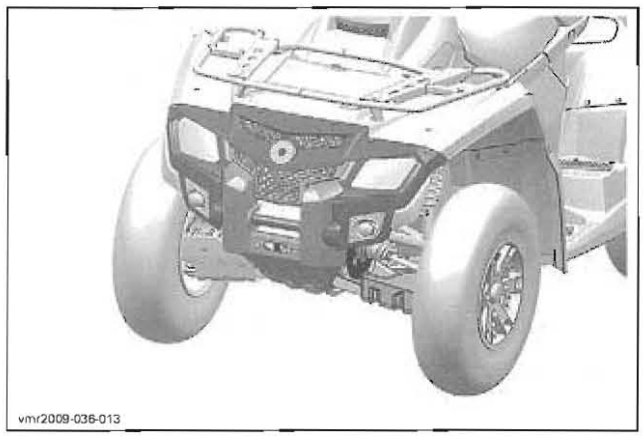

TYPICAL - OUTLANDER MAX 800R SHOWN

On **XT models**, remove hook at the end of winch cable and the front heavy duty bumper.

Remove front fender.

Unplug headlamps connectors.

On **CE models**, unplug director indicators connectors.

Unscrew bolts that attach front bumper to fender support.

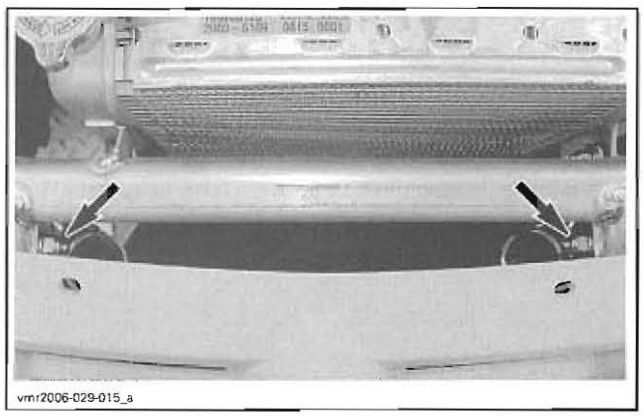

Unscrew bolts retaining the bottom of bumper to frame.

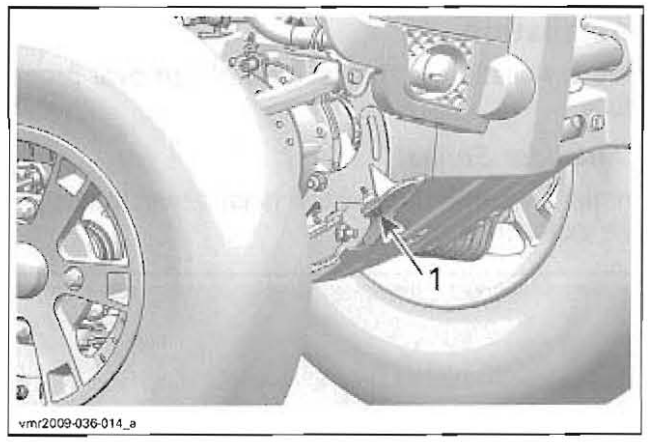

1. Front bumper screws

Remove front bumper with front skid plate and front fascia assembly.

Disassemble all parts if necessary.

Renegade Models

Unscrew bolts securing the front bumper to the bumper bracket.

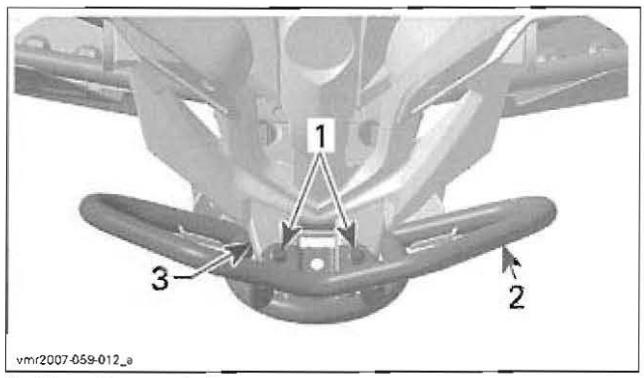

1. Upper bumper bolts
2. Front bumper
3. Bumper bracket

Unscrew bolts retaining the bottom of front bumper to frame.

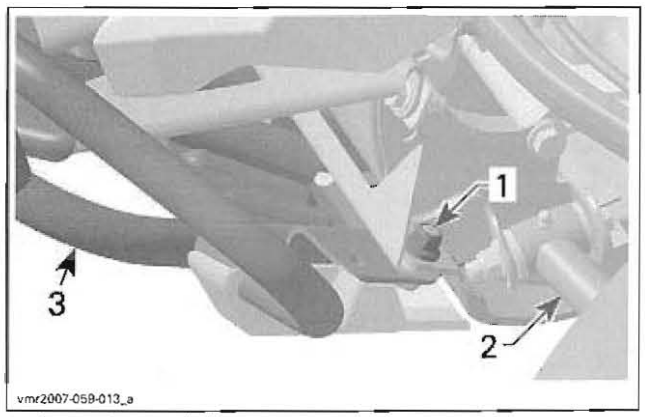

1. Lower bumper bolt
2. LH lower suspension arm
3. Front bumper

Remove front bumper.

www.midwestmanuals.com

Installation

The installation is the reverse of removal procedure.

Outlander Series

Install a washer under each plastic rivet located at the both ends of fascia.

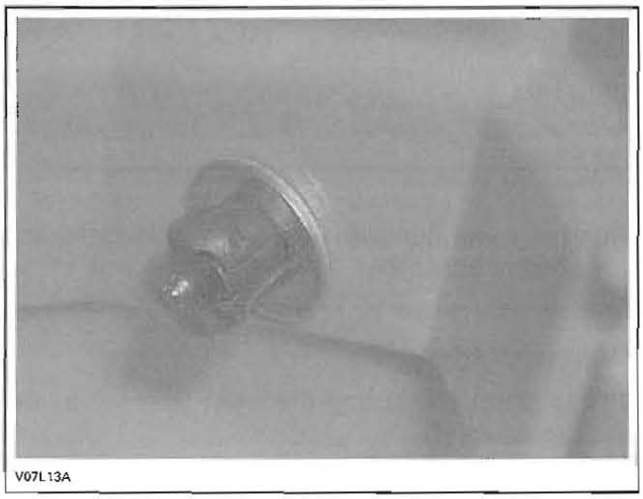

V07L13A

www.midwestmanuals.com

OUTLANDER

MODEL				OUTLANDER™ 500	OUTLANDER™ 650	OUTLANDER™ 800R
ENGINE						
Engine type				ROTAX® V490	ROTAX® V660	ROTAX® V810
				4-stroke, Single Over Head Camshaft (SOHC), liquid cooled		
Number of cylinders				2		
Number of valves				8 valves (mechanical adjustment)		
Bore			mm (in)	82.03 (3.23)		91 (3.58)
Stroke			mm (in)	47.3 (1.86)	61.5 (2.42)	
Displacement			cm^3 (in^3)	500 (30.51)	650 (39.67)	800 (48.82)
Compression ratio				10.7:1	10.3:1	10.3:1
Decompressor type				N.A.		
Maximum HP RPM			RPM	7250		
Lubrication	Type			Wet sump. Replaceable oil filter		
	Oil filter			BRP Rotax paper type, replaceable		
	Engine oil pressure	Minimum		350 kPa (51 PSI) at 6000 RPM		
	Engine oil	Capacity (oil change with filter)		2 L (2.11 quarts)		
		Recommended		SAE 5W30 API classification SM, SL or SJ see *OIL VISCOSITY CHART* in *LUBRICATION SYSTEM*		
Intake valve opening				3° BTDC	5° BTDC	5° BTDC
Intake valve closing				34° ABDC	45° ABDC	45° ABDC
Exhaust valve opening				39° BBDC	50° BBDC	55° BBDC
Exhaust valve closing				2° ATDC	0° ATDC	5° ATDC
Chain tensioner plunger protrusion		Service limit	mm (in)	20.0 (.7874)		
Valve clearance	Intake		mm (in)	0.06 to 0.14 (.0024 to .0055)		
	Exhaust		mm (in)	0.11 to 0.19 (.0043 to .0075)		
Valve stem diameter	Intake	New	mm (in)	4.966 to 4.980 (.1955 to .1960)		
		Service limit	mm (in)	4.930 (.1941)		
	Exhaust	New	mm (in)	4.956 to 4.970 (.1951 to .1957)		
		Service limit	mm (in)	4.930 (.1941)		
Valve out of round	Intake and exhaust	New	mm (in)	0.005 (.0002)		
		Service limit	mm (in)	0.06 (.0024)		
Valve guide diameter		New	mm (in)	4.998 to 5.018 (.1968 to .1976)		
		Service limit	mm (in)	5.050 (.1988)		
Valve spring free length		New	mm (in)	40.81 (1.607)		
		Service limit	mm (in)	39.00 (1.535)		
Valve seat contact width	Intake	New	mm (in)	1.05 to 1.35 (.041 to .053)		
		Service limit	mm (in)	1.8 (.070)		
	Exhaust	New	mm (in)	1.25 to 1.55 (.049 to .061)		
		Service limit	mm (in)	2 (.078)		

www.midwestmanuals.com

MODEL			OUTLANDER™ 500	OUTLANDER™ 650	OUTLANDER™ 800R
ENGINE (cont'd)					
Rocker arm bore diameter		New mm (in)	12.036 to 12.050 (.4739 to .4744)		
		Service limit mm (in)	12.060 (.4748)		
Rocker arm shaft diameter		New mm (in)	12.000 to 12.018 (.4724 to .4731)		
		Service limit mm (in)	11.990 (.4720)		
Piston measurement		New mm (in)	81.950 to 81.966 (3.2264 to 3.2270)		90.950 to 90.966 (3.5807 to 3.5813)
		Service limit mm (in)	81.850 (3.2224)		90.850 (3.577)
Piston/cylinder clearance		New mm (in)	0.057 (.0022)		0.027 (.0011)
		Service limit mm (in)	0.130 (.0051)		0.100 (.0040)
Piston ring type		1st	Upper compression ring, rectangular		
		2nd	Lower compression ring, tapered face		
		3rd	Oil scraper ring		
Ring end gap	Rectangular	New mm (in)	0.20 to 0.40 (.008 to .016)		
	Tapered face		0.20 to 0.40 (.008 to .016)		
	Oil scraper ring		0.20 to 0.70 (.008 to .028)		
	All	Service limit mm (in)	1.5 (.059)		
Ring/piston groove clearance	Rectangular	New mm (in)	0.03 to 0.070 (.0012 to .0028)		
	Tapered face		0.02 to 0.060 (.0008 to .0024)		
	Oil scraper ring		0.01 to 0.018 (.0004 to .0007)		
	Rectangular	Service limit mm (in)	0.15 (.0059)		
	Tapered face		0.15 (.0059)		
	Oil scraper ring		0.25 (.0098)		
Cylinder bore		New mm (in)	82.023 to 82.037 (3.2292 to 3.2298)		90.993 to 91.007 (3.5823 to 3.5829)
Cylinder taper		Maximum New mm (in)	0.038 (.0015)		
		Service limit mm (in)	0.090 (.0035)		
Cylinder out of round		Maximum New mm (in)	0.015 (.0006)		
		Service limit mm (in)	0.020 (.0008)		
Camshaft main bearing journal	Timing chain side	New mm (in)	34.959 to 34.975 (1.3763 to 1.3770)		
		Service limit mm (in)	34.950 (1.3760)		
	Spark plug side	New mm (in)	21.959 to 21.980 (.8645 to .8654)		
		Service limit mm (in)	21.950 (.8642)		
Camshaft main bearing journal bore	Timing chain side	New mm (in)	35.000 to 35.025 (1.3780 to 1.3789)		
		Service limit mm (in)	35.040 (1.3795)		
	Spark plug side	New mm (in)	22.000 to 22.021 (.8661 to .8670)		
		Wear limit mm (in)	22.040 (.8677)		
Camshaft lobe	Intake valve	New mm (in)	31.830 to 32.030 (1.2531 to 1.2610)	32.11 to 32.31 (1.2642 to 1.2721)	32.950 - 33.150 (1.2972- 1.3051)
		Service limit mm (in)	31.810 (1.2524)	32.09 (1.2634)	32.870 (1.2941)
	Exhaust valve	New mm (in)	31.730 to 31.930 (1.2492 to 1.2571)	31.94 to 32.14 (1.2575 to 1.2654)	32.950 - 33.150 (1.2972- 1.3051)
		Service limit mm (in)	31.710 (1.2484)	31.92 (1.2567)	32.930 (1.2965)

www.midwestmanuals.com

MODEL				OUTLANDER™ 500	OUTLANDER™ 650	OUTLANDER™ 800R
ENGINE (cont'd)						
Crankshaft main journal diameter MAG/PTO side		New	mm (in)	42.024 to 42.040 (1.6545 to 1.6551)		
		Service limit	mm (in)	42.000 (1.6535)		
Crankshaft radial play MAG/PTO side		Service limit	mm (in)	0.07 (.0031)		
Crankshaft main journal diameter PTO support bearing		New	mm (in)	34.024 to 34.040 (1.3395 to 1.3402)		
		Service limit	mm (in)	34.010 (1.3390)		
Crankshaft radial play PTO support bearing		Service limit	mm (in)	0.10 (.0039)		
Crankshaft pin diameter		New	mm (in)	35.064 to 35.080 (1.3805 to 1.3811)	40.009 to 40.025 (1.5752 to 1.5758)	
		Service limit	mm (in)	35.050 (1.3800)	39.990 (1.5744)	
Crankshaft deflection	MAG/PTO side	New	mm (in)	0.050 (.002)		
Crankcase plain bearing	MAG/PTO side	Service limit	mm (in)	42.100 (1.6575)		
PTO cover plain bearing		Service limit	mm (in)	34.120 (1.3433)		
Connecting rod big end diameter		Service limit	mm (in)	35.150 (1.3839)	40.100 (1.579)	
Connecting rod big end radial play		Service limit	mm (in)	0.09 (.0035)		
Connecting rod big end axial play		New	mm (in)	0.200 to 0.500 (.008 to .020)		
		Service limit	mm (in)	0.600 (.024)		
Connecting rod small end diameter		New	mm (in)	18.010 to 18.020 (.7091 to .7095)	20.010 to 20.020 (.7878 to .7882)	
		Service limit	mm (in)	18.060 (.7110)	20.060 (.7898)	
Piston pin diameter		New	mm (in)	17.996 to 18.000 (.7085 to .7087)	19.996 to 20.000 (.7872 to .7874)	
		Service limit	mm (in)	17.980 (.7079)	19.980 (.7866)	
Connecting rod/piston pin clearance (radial play)		Service limit	mm (in)	0.080 (.0035)		
GEARBOX						
Type				Dual range (HI-LO) with park, neutral and reverse		
Gearbox oil		Capacity		400 ml (14 U.S. oz)		
		Recommended		XP-S chaincase oil		
Output shaft backlash		New	mm (in)	0.10 to 0.20 (.0039 to .0079)		
		Service limit	mm (in)	0.25 (.0098)		
Bevel gear axial play		New	mm (in)	0.02 to 0.15 (.0008 to .0059)		
		Service limit	mm (in)	0.19 (.0075)		
Shifting sleeve groove width		New	mm (in)	5.25 to 5.35 (.207 to .211)		
		Service limit	mm (in)	5.50 (.217)		
Shifting fork claw thickness		New	mm (in)	4.95 to 5.05 (.195 to .199)		
		Service limit	mm (in)	4.80 (.189)		
Shift fork claw thickness (for high gear shifting)		New	mm (in)	4.80 to 4.90 (.189 to .193)		
		Service limit	mm (in)	4.70 (.185)		
Shift fork claw thickness (for low/reverse gear shifting)		New	mm (in)	5.10 to 5.20 (.201 to .205)		
		Service limit	mm (in)	5.00 (.197)		
Shift fork pin diameter		New	mm (in)	6.920 to 6.970 (.272 to .274)		
		Service limit	mm (in)	6.850 (.270)		

www.midwestmanuals.com

MODEL				OUTLANDER™ 500	OUTLANDER™ 650	OUTLANDER™ 800R
ENGINE (cont'd)						
Gap of shift fork engagement groove (high gear shifting)		New	mm (in)	5.00 to 5.10 (.197 to .201)		
		Service limit	mm (in)	5.20 (.205)		
Gap of shift fork engagement groove (low/reverse gear shifting)		New	mm (in)	5.30 to 5.40 (.209 to 213)		
		Service limit	mm (in)	5.50 (.217)		
Diameter free pinions		New	mm (in)	29.000 to 29.013 (1.1417 to 1.1422)		
		Service limit	mm (in)	29.015 (1.1422)		
Intermediate gear shaft		New	mm (in)	24.979 to 25.000 (.983 to .984)		
		Service limit	mm (in)	24.977 (.983)		
Countershaft	Right side	Service limit	mm (in)	17.990 (.708)		
	Free pinion bearing			24.970 (.983)		
	CVT side			24.970 (.983)		
Bevel gear shaft	Free pinion bearing	Service limit	mm (in)	24.984 (.984)		
COOLING SYSTEM						
Coolant	Type			Ethyl glycol/water mix (50% coolant, 50% water). Use premixed coolant sold by BRP (P/N 219 700 362) or coolant specifically designed for aluminum engines		
	Capacity		L (quarts)	2.9 (3.06)		
Thermostat	Opening temperature		°C (°F)	65 (149)		
Radiator cap opening pressure			kPa (PSI)	110 (16)		
ELECTRICAL SYSTEM						
Magneto generator output				400 W @ 6000 RPM		
Ignition system type				IDI (Inductive Discharge Ignition)		
Ignition timing				Not adjustable		
Spark plug	Quantity			2		
	Make and type			NGK DCPR8E		
	Gap		mm (in)	0.6 to 0.7 (.024 to .027)		
Engine RPM limiter setting	Forward		RPM	8000		8200
	Reverse		RPM	3200		
Battery	Type			Maintenance free		
	Voltage			12 volts		
	Nominal rating		A•h	18		
	Power starter output		KW	0.7		
Headlamp			W	2 x 35		
Taillight			W	8/27		
Director indicator (European Community models)			W	10		
Indicator lights				LEDS, 0.7 V approximately (each)		

www.midwestmanuals.com

MODEL				OUTLANDER™ 500	OUTLANDER™ 650	OUTLANDER™ 800R
ELECTRICAL SYSTEM (cont'd)						
Fuses	Accessories		A	20		
	Fan		A	20		
	Main		A	30		
	Ignition coils		A	5		
	Fuel injectors		A	5		
	Solenoids/speedometer/speed sensor/tail lamp		A	7.5		
	Fuel pump		A	7.5		
	Engine control module (ECM)		A	5		
	Main accessories		A	30		
FUEL SYSTEM						
Fuel delivery	Type			Electronic Fuel Injection (EFI), DeLorto 46 mm throttle body, 1 injector per cylinder		
Fuel pump	Type			Bosch		
	Model			Electrical (in fuel tank)		
	Operating pressure		kPa (PSI)	350 (51)		
Idle speed			RPM ± 50	1250 (not adjustable)		
Fuel	Type			Regular unleaded gasoline		
	Octane rating	Inside North America	(R+M)/2	87 or higher		
		Outside North America	RON	92 or higher		
Fuel tank capacity			L (U.S. gal)	20 (5.3)		
Remaining fuel in fuel tank when display light turns ON			L (U.S. gal)	± 5 (1.32)		
DRIVE TRAIN						
Front drive				Shaft driven/Auto-lock differential (shear pump)		
Front drive ratio				3.6:1		
Rear drive				Shaft driven/locked differential		
Rear drive ratio				3.6:1		
Differential oil	Capacity	Front		500 ml (17 U.S. oz)		
		Rear		250 ml (8.5 U.S. oz)		
	Recommended			BRP differential oil (P/N 293 600 043) or synthetic oil 75W90 (API GL5)		
CV joint grease				CV joint grease (P/N 293 550 019)		
Propeller shaft grease				XP-S synthetic grease (P/N 293 550 010)		

www.midwestmanuals.com

MODEL			OUTLANDER™ 500	OUTLANDER™ 650	OUTLANDER™ 800R
TRANSMISSION					
Type			CVT (Continuously Variable Transmission)		
Engagement RPM		± 100 RPM	1800		
CVT					
Drive belt width	Service limit	mm (in)	30.00 (1.181)		
Governor cup roller outer diameter	New	mm (in)	13.70 to 13.80 (.539 to .543)		
	Service limit	mm (in)	13.20 (.519)		
Governor cup roller inner diameter	New	mm (in)	8.05 to 8.15 (.317 to .321)		
	Service limit	mm (in)	9.00 (.354)		
Centrifugal lever pivot bolt diameter	New	mm (in)	6.078 to 6.100 (.239 to .240)		
	Service limit	mm (in)	6.000 (.236)		
Centrifugal lever bore diameter	Service limit	mm (in)	6.200 (.244)		
Drive pulley sliding half centrifugal lever pivot bolt bore diameter	New	mm (in)	6.113 to 6.171 (.241 to .243)		
	Service limit	mm (in)	6.300 (.248)		
Drive pulley sliding half large bushing	New	mm (in)	55.000 to 55.040 (2.165 to 2.167)		
	Service limit	mm (in)	55.200 (2.173)		
Drive pulley sliding half small bushing	New	mm (in)	32.000 to 32.040 (1.260 to 1.261)		
	Service limit	mm (in)	32.200 (1.268)		
Driven pulley sliding half bushing	New	mm (in)	30.060 to 30.100 (1.183 to 1.185)		
	Service limit	mm (in)	30.200 (1.189)		
Driven pulley sliding fixed bushing	New	mm (in)	30.060 to 30.100 (1.183 to 1.185)		
	Service limit	mm (in)	30.200 (1.189)		
Torque gear on driven pulley	Service limit	mm (in)	7.500 (.295)		
STEERING					
Turning radius	1-UP Models		2.16 m (7 ft)		
	2-UP Models		2.4 m (7 ft 10 in)		
Total toe (vehicle on ground)		mm (in)	0 ± 4 (0 ± .157)		
Camber angle			0°		
Tie-rod maximum length unengaged threads		mm (in)	17.5 ± 5 (11/16 ± 3/16)		
SUSPENSION					
FRONT					
Suspension type			Mac Pherson	Double suspension arm	
Suspension travel		mm (in)	178 (7)	203 (8)	
Shock absorber	Qty		2		
	Type		Oil		
Spring free length	Standard	mm (in)	372 (14-5/8)	349 (13-3/4)	
	XT	mm (in)	387 (15-1/4)	359 (14-1/8)	
	MAX	mm (in)	372 (14-21/32)	358 (14-3/32)	
	MAX XT	mm (in)	387 (15-15/64)	369 (14-17/32)	
	LTD	mm (in)	—		369 (14-17/32)

www.midwestmanuals.com

MODEL			OUTLANDER™ 500	OUTLANDER™ 650	OUTLANDER™ 800R
SUSPENSION (cont'd)					
Spring color code	Standard		Silver/Silver/Silver	Silver/Yellow/Silver	
	XT		White/Blue/Gold	Silver/Gold/Silver	
	MAX		Silver/Silver/Silver	White/Silver/White	
	MAX XT		Red/Gold/Red	Gold/Silver/Gold	
	LTD		—		Gold/Silver/Gold
Front preload adjustment			N.A.	5 settings	
REAR					
Suspension type			TTI™ independent		
Suspension travel		mm (in)	229 (9)		
Shock absorber	Qty		2		
	Type		Oil		
Spring free length	Standard and XT	mm (in)	354 (13-15/16)		
	MAX and MAX XT	mm (in)	364 (14-21/64)		
	LTD	mm (in)	—		364 (14-21/64)
Spring color code	Standard		Silver/White/Gold		
	XT		Gold/Blue/Gold	Silver/White/Gold	
	MAX and MAX XT		Silver/Silver/Gold		
	LTD		—		Silver/Silver/Gold
Rear preload adjustment			5 settings		
BRAKES					
Front brake		Qty	2		
		Type	Hydraulic, discs		
Rear brake		Qty	1		
		Type	Hydraulic, disc		
Brake fluid	Capacity		180 ml (6.1 U.S. oz)		
	Type		DOT 4		
Parking brake			Hydraulic lock-4 wheels		
Caliper			Floating		
Brake pad material		Front	Organic CE models: Metallic		
		Rear	Metallic		
Minimum brake pad thickness		mm (in)	1 (.04)		
Minimum brake disc thickness	Front	mm (in)	3.5 (.138)		
	Rear	mm (in)	4.3 (.17)		
Maximum brake disc warpage		mm (in)	0.2 (.01)		

www.midwestmanuals.com

MODEL				OUTLANDER™ 500	OUTLANDER™ 650	OUTLANDER™ 800R
TIRES AND WHEELS						
TIRES						
Pressure	1-UP Models	Front	kPa (PSI)	Maximum: 34.5 (5) Minimum: 31 (4.5)	Maximum: 48 (7) Minimum: 31 (4.5)	
		Rear	kPa (PSI)	Maximum: 34.5 (5) Minimum: 31 (4.5)	Maximum: 48 (7) Minimum: 31 (4.5)	
	2-UP Models	Front	kPa (PSI)	Maximum: 34.5 (5) Minimum: 31 (4.5)	Maximum: 48 (7) Minimum: 31 (4.5)	
		Rear	kPa (PSI)	Maximum: 34.5 (5) Minimum: 31 (4.5)	Maximum: 48 (7) Minimum: 34.5 (5)	
Minimum tire thread depth			mm (in)	3 (0.118)		
Size		Front		25 x 8 x 12	26 x 8 x 12	
		Rear		25 x 10 x 12	26 x 10 x 12	
WHEELS						
Size		Front		12 x 6		
		Rear		12 x 7.5		
DIMENSION						
Overall length		1-UP Models	m (in)	2.18 (86)		
		2-UP Models	m (in)	2.39 (94)		
Overall width			m (in)	1.17 (46)		
Overall height			m (in)	1.14 (45)		
Wheel base		1-UP Models	m (in)	1.30 (51)		
		2-UP Models	m (in)	1.50 (59)		
Wheel track		Front	mm (in)	965 (38)		
		Rear	mm (in)	914 (36)		
Ground clearance			mm (in)	279 (11)	305 (12)	
WEIGHT AND LOADING CAPACITY						
Dry weight		1-UP Models	kg (lb)	293 (645)	299 (660)	301 (663)
		2-UP Models	kg (lb)	312 (688)	322 (710)	323 (713)
Weight distribution		Front/rear	%	51/49 500 XT and MAX: 48/52		
Rear storage box (included with rear rack weight)			kg (lb)	10 (22)		
Rack		Front	kg (lb)	45 (100)		
		Rear	kg (lb)	90 (200) (including rear storage box and tongue weight)		
Total vehicle load allowed (including driver, all other loads and added accessories)		1-UP Models	kg (lb)	235 (517)		
		2-UP Models	kg (lb)	272 (600)		

www.midwestmanuals.com

MODEL			OUTLANDER™ 500	OUTLANDER™ 650	OUTLANDER™ 800R
WEIGHT AND LOADING CAPACITY (cont'd)					
Gross vehicle weight rating	1-UP Models	kg (lb)	553 (1220)	584 (1287)	
	2-UP Models	kg (lb)	558 (1228)	649 (1430)	
Towing capacity		kg (lb)	590 (1300) CE models: 135 (298)		
Tongue capacity (included with rear rack weight)		kg (lb)	23 (50) CE models: 13 (29)		

www.midwestmanuals.com

www.midwestmanuals.com

RENEGADE

MODEL				RENEGADE™ 500	RENEGADE™ 800R	RENEGADE™ 800R X
ENGINE						
Engine type				ROTAX® V490	ROTAX® V810	
				4-stroke, Single Over Head Camshaft (SOHC), liquid cooled		
Number of cylinders				2		
Number of valves				8 valves (mechanical adjustment)		
Bore			mm (in)	82.03 (3.23)	91 (3.58)	
Stroke			mm (in)	47.3 (1.86)	61.5 (2.42)	
Displacement			cm^3 (in^3)	500 (30.51)	800 (48.82)	
Compression ratio				10.7:1	10.3:1	
Decompressor type				N.A.		
Maximum HP RPM			RPM	7250		
Lubrication	Type			Wet sump. Replaceable oil filter		
	Oil filter			BRP Rotax paper type, replaceable		
	Engine oil pressure	Minimum		350 kPa (51 PSI) at 6000 RPM		
	Engine oil	Capacity (oil change with filter)		2 L (2.11 quarts)		
		Recommended		SAE 5W30 API classification SM, SL or SJ see *OIL VISCOSITY CHART* in *LUBRICATION SYSTEM*		
Intake valve opening				3° BTDC	5° BTDC	
Intake valve closing				34° ABDC	45° ABDC	
Exhaust valve opening				39° BBDC	55° BBDC	
Exhaust valve closing				2° ATDC	5° ATDC	
Chain tensioner plunger protrusion		Service limit	mm (in)	20.0 (.7874)		
Valve clearance	Intake		mm (in)	0.06 to 0.14 (.0024 to .0055)		
	Exhaust		mm (in)	0.11 to 0.19 (.0043 to .0075)		
Valve stem diameter	Intake	New	mm (in)	4.966 to 4.980 (.1955 to .1960)		
		Service limit	mm (in)	4.930 (.1941)		
	Exhaust	New	mm (in)	4.956 to 4.970 (.1951 to .1957)		
		Service limit	mm (in)	4.930 (.1941)		
Valve out of round	Intake and exhaust	New	mm (in)	0.005 (.0002)		
		Service limit	mm (in)	0.06 (.0024)		
Valve guide diameter		New	mm (in)	5.006 to 5.018 (.1971 to .1976)		
		Service limit	mm (in)	5.050 (.1988)		
Valve spring free length		New	mm (in)	40.81 (1.607)		
		Service limit	mm (in)	39.00 (1.535)		
Valve seat contact width	Intake	New	mm (in)	1.05 to 1.35 (.041 to .053)		
		Service limit	mm (in)	1.8 (.070)		
	Exhaust	New	mm (in)	1.25 to 1.55 (.049 to .061)		
		Service limit	mm (in)	2 (.078)		

www.midwestmanuals.com

MODEL				RENEGADE™ 500	RENEGADE™ 800R	RENEGADE™ 800R X
ENGINE (cont'd)						
Rocker arm bore diameter		New	mm (in)	12.036 to 12.050 (.4739 to .4744)		
		Service limit	mm (in)	12.060 (.4748)		
Rocker arm shaft diameter		New	mm (in)	12.000 to 12.018 (.4724 to .4731)		
		Service limit	mm (in)	11.990 (.4720)		
Piston measurement		New	mm (in)	81.950 to 81.966 (3.2264 to 3.2270)	90.950 to 90.966 (3.5807 to 3.5813)	
		Service limit	mm (in)	81.850 (3.2224)	90.850 (3.577)	
Piston/cylinder clearance		New	mm (in)	0.057 (.0022)	0.027 (.0011)	
		Service limit	mm (in)	0.130 (.0051)	0.100 (.0040)	
Piston ring type		1st		Upper compression ring, rectangular		
		2nd		Lower compression ring, tapered face		
		3rd		Oil scraper ring		
Ring end gap	Rectangular	New	mm (in)	0.20 to 0.40 (.008 to .016)		
	Taper-face			0.20 to 0.40 (.008 to .016)		
	Oil scraper ring			0.20 to 0.70 (.008 to .028)		
	All	Service limit	mm (in)	1.5 (.059)		
Ring/piston groove clearance	Rectangular	New	mm (in)	0.03 to 0.070 (.0012 to .0028)		
	Taper-face			0.02 to 0.060 (.0008 to .0024)		
	Oil scraper ring			0.01 to 0.018 (.0004 to .0007)		
	Rectangular	Service limit	mm (in)	0.15 (.0059)		
	Taper-face			0.15 (.0059)		
	Oil scraper ring			0.25 (.0098)		
Cylinder bore		New	mm (in)	82.023 to 82.037 (3.2292 to 3.2298)	90.993 to 91.007 (3.5823 to 3.5829)	
Cylinder taper		Maximum New	mm (in)	0.038 (.0015)		
		Service limit	mm (in)	0.090 (.0035)		
Cylinder out of round		Maximum New	mm (in)	0.015 (.0006)		
		Service limit	mm (in)	0.020 (.0008)		
Camshaft main bearing journal	Timing chain side	New	mm (in)	34.959 to 34.975 (1.3763 to 1.3770)		
		Service limit	mm (in)	34.950 (1.3760)		
	Spark plug side	New	mm (in)	21.959 to 21.980 (.8645 to .8654)		
		Service limit	mm (in)	21.950 (.8642)		
Camshaft main bearing journal bore	Timing chain side	New	mm (in)	35.000 to 35.025 (1.3780 to 1.3789)		
		Service limit	mm (in)	35.040 (1.3795)		
	Spark plug side	New	mm (in)	22.000 to 22.021 (.8661 to .8670)		
		Wear limit	mm (in)	22.040 (.8677)		
Camshaft lobe	Intake valve	New	mm (in)	31.830 to 32.030 (1.2531 to 1.2610)	32.950 - 33.150 (1.2972- 1.3051)	
		Service limit	mm (in)	31.810 (1.2524)	32.870 (1.2941)	
	Exhaust valve	New	mm (in)	31.730 to 31.930 (1.2492 to 1.2571)	32.950 - 33.150 (1.2972- 1.3051)	
		Service limit	mm (in)	31.710 (1.2484)	32.930 (1.2965)	

www.midwestmanuals.com

MODEL				RENEGADE™ 500	RENEGADE™ 800R	RENEGADE™ 800R X
ENGINE (cont'd)						
Crankshaft main journal diameter MAG/PTO side		New	mm (in)	42.024 to 42.040 (1.6545 to 1.6551)		
		Service limit	mm (in)	42.000 (1.6535)		
Crankshaft radial play MAG/PTO side		Service limit	mm (in)	0.07 (.0031)		
Crankshaft main journal diameter PTO support bearing		New	mm (in)	34.024 to 34.040 (1.3395 to 1.3402)		
		Service limit	mm (in)	34.010 (1.3390)		
Crankshaft radial play PTO support bearing		Service limit	mm (in)	0.10 (.0039)		
Crankshaft pin diameter		New	mm (in)	35.064 to 35.080 (1.3805 to 1.3811)	40.009 to 40.025 (1.5752 to 1.5758)	
		Service limit	mm (in)	35.050 (1.3800)	39.990 (1.5744)	
Crankshaft deflection	MAG/PTO side	New	mm (in)	0.050 (.002)		
Crankcase plain bearing	MAG/PTO side	Service limit	mm (in)	42.100 (1.6575)		
PTO cover plain bearing		Service limit	mm (in)	34.120 (1.3433)		
Connecting rod big end diameter		Service limit	mm (in)	35.150 (1.3839)	40.100 (1.579)	
Connecting rod big end radial play		Service limit	mm (in)	0.09 (.0035)		
Connecting rod big end axial play		New	mm (in)	0.200 to 0.500 (.008 to .020)		
		Service limit	mm (in)	0.600 (.024)		
Connecting rod small end diameter		New	mm (in)	18.010 to 18.020 (.7091 to .7095)	20.010 to 20.020 (.7878 to .7882)	
		Service limit	mm (in)	18.060 (.7110)	20.060 (.7898)	
Piston pin diameter		New	mm (in)	17.996 to 18.000 (.7085 to .7087)	19.996 to 20.000 (.7872 to .7874)	
		Service limit	mm (in)	17.980 (.7079)	19.980 (.7866)	
Connecting rod/piston pin clearance (radial play)		Service limit	mm (in)	0.080 (.0035)		
GEARBOX						
Type				Dual range (HI-LO) with park, neutral and reverse		
Gearbox oil		Capacity		400 ml (14 U.S. oz)		
		Recommended		XP-S chaincase oil		
Output shaft backlash		New	mm (in)	0.10 to 0.20 (.0039 to .0079)		
		Service limit	mm (in)	0.25 (.0098)		
Bevel gear axial play		New	mm (in)	0.02 to 0.15 (.0008 to .0059)		
		Service limit	mm (in)	0.19 (.0075)		
Shifting sleeve groove width		New	mm (in)	5.25 to 5.35 (.207 to .211)		
		Service limit	mm (in)	5.50 (.217)		
Shifting fork claw thickness		New	mm (in)	4.95 to 5.05 (.195 to .199)		
		Service limit	mm (in)	4.80 (.189)		
Shift fork claw thickness (for high gear shifting)		New	mm (in)	4.80 to 4.90 (.189 to .193)		
		Service limit	mm (in)	4.70 (.185)		
Shift fork claw thickness (for low/reverse gear shifting)		New	mm (in)	5.10 to 5.20 (.201 to .205)		
		Service limit	mm (in)	5.00 (.197)		
Shift fork pin diameter		New	mm (in)	6.920 to 6.970 (.272 to .274)		
		Service limit	mm (in)	6.850 (.270)		

www.midwestmanuals.com

MODEL				RENEGADE™ 500	RENEGADE™ 800R	RENEGADE™ 800R X
ENGINE (cont'd)						
Gap of shift fork engagement groove (high gear shifting)		New	mm (in)	5.00 to 5.10 (.197 to .201)		
		Service limit	mm (in)	5.20 (.205)		
Gap of shift fork engagement groove (low/reverse gear shifting)		New	mm (in)	5.30 to 5.40 (.209 to 213)		
		Service limit	mm (in)	5.50 (.217)		
Diameter free pinions		New	mm (in)	29.000 to 29.013 (1.1417 to 1.1422)		
		Service limit	mm (in)	29.015 (1.1422)		
Intermediate gear shaft		New	mm (in)	24.979 to 25.000 (.983 to .984)		
		Service limit	mm (in)	24.977 (.983)		
Countershaft	Right side	Service limit	mm (in)	17.990 (.708)		
	Free pinion bearing			24.970 (.983)		
	CVT side			24.970 (.983)		
Bevel gear shaft	Free pinion bearing	Service limit	mm (in)	24.984 (.984)		
COOLING SYSTEM						
Coolant	Type			Ethyl glycol/water mix (50% coolant, 50% water). Use premixed coolant sold by BRP (P/N 219 700 362) or coolant specifically designed for aluminum engines		
	Capacity		L (quarts)	2.9 (3.06)		
Thermostat	Opening temperature		°C (°F)	65 (149)		
Radiator cap opening pressure			kPa (PSI)	110 (16)		
ELECTRICAL SYSTEM						
Magneto generator output				400 W @ 6000 RPM		
Ignition system type				IDI (Inductive Discharge Ignition)		
Ignition timing				Not adjustable		
Spark plug	Quantity			2		
	Make and type			NGK DCPR8E		
	Gap		mm (in)	0.6 to 0.7 (.024 to .027)		
Engine RPM limiter setting	Forward		RPM	8000	8200	
	Reverse		RPM	3200		
Battery	Type			Maintenance free		
	Voltage			12 volts		
	Nominal rating		A•h	18		
	Power starter output		KW	0.7		
Headlamp			W	2 x 35		
Taillight			W	8/27		
Director indicator (European Community models)			W	10		
Indicator lights				LEDS, 0.7 V approximately (each)		

www.midwestmanuals.com

MODEL				RENEGADE™ 500	RENEGADE™ 800R	RENEGADE™ 800R X
ELECTRICAL SYSTEM (cont'd)						
Fuses	Accessories		A	20		
	Fan		A	20		
	Main		A	30		
	Ignition coils		A	5		
	Fuel injectors		A	5		
	Solenoids/speedometer/speed sensor/tail lamp		A	7.5		
	Fuel pump		A	7.5		
	Engine control module (ECM)		A	5		
	Main accessories		A	30		
FUEL SYSTEM						
Fuel delivery	Type			Electronic Fuel Injection (EFI), Dell'Orto 46 mm throttle body, 1 injector per cylinder		
Fuel pump	Type			Bosch		
	Model			Electrical (in fuel tank)		
	Operating pressure		kPa (PSI)	350 (51)		
Idle speed			RPM ± 50	1250 (not adjustable)		
Fuel	Type			Regular unleaded gasoline		
	Octane rating	Inside North America	(R+M)/2	87 or higher		
		Outside North America	RON	92 or higher		
Fuel tank capacity			L (U.S. gal)	20 (5.3)		
Remaining fuel in fuel tank when display light turns ON			L (U.S. gal)	± 5 (1.32)		
DRIVE TRAIN						
Front drive				Shaft driven/Auto-lock differential (shear pump)		
Front drive ratio				3.6:1		
Rear drive				Shaft driven/locked differential		
Rear drive ratio				3.6:1		
Differential oil	Capacity	Front		500 ml (17 U.S. oz)		
		Rear		250 ml (8.5 U.S. oz)		
	Recommended			BRP differential oil (P/N 293 600 043) or synthetic oil 75W90 (API GL5)		
CV joint grease				CV joint grease (P/N 293 550 019)		
Propeller shaft grease				XP-S synthetic grease (P/N 293 550 010)		

www.midwestmanuals.com

MODEL			RENEGADE™ 500	RENEGADE™ 800R	RENEGADE™ 800R X
TRANSMISSION					
Type			CVT (Continuously Variable Transmission)		
Engagement RPM		± 100 RPM	1800	1600	
CVT					
Drive belt width	Service limit	mm (in)	30.00 (1.181)		
Governor cup roller outer diameter	New	mm (in)	13.70 to 13.80 (.539 to .543)		
	Service limit	mm (in)	13.20 (.519)		
Governor cup roller inner diameter	New	mm (in)	8.05 to 8.15 (.317 to .321)		
	Service limit	mm (in)	9.00 (.354)		
Centrifugal lever pivot bolt diameter	New	mm (in)	6.078 to 6.100 (.239 to .240)		
	Service limit	mm (in)	6.000 (.236)		
Centrifugal lever bore diameter	Service limit	mm (in)	6.200 (.244)		
Drive pulley sliding half centrifugal lever pivot bolt bore diameter	New	mm (in)	6.113 to 6.171 (.241 to .243)		
	Service limit	mm (in)	6.300 (.248)		
Drive pulley sliding half large bushing	New	mm (in)	55.000 to 55.040 (2.165 to 2.167)		
	Service limit	mm (in)	55.200 (2.173)		
Drive pulley sliding half small bushing	New	mm (in)	32.000 to 32.040 (1.260 to 1.261)		
	Service limit	mm (in)	32.200 (1.268)		
Driven pulley sliding half bushing	New	mm (in)	30.060 to 30.100 (1.183 to 1.185)		
	Service limit	mm (in)	30.200 (1.189)		
Driven pulley sliding fixed bushing	New	mm (in)	30.060 to 30.100 (1.183 to 1.185)		
	Service limit	mm (in)	30.200 (1.189)		
Torque gear on driven pulley	Service limit	mm (in)	7.500 (.295)		
STEERING					
Turning radius			2.16 m (7 ft)		
Total toe (vehicle on ground)		mm (in)	0 ± 4 (0 ± .157)		
Camber angle			0°		
Tie-rod maximum length unengaged		mm (in)	17.5 ± 5 (11/16 ± 3/16)		
SUSPENSION					
FRONT					
Suspension type			Double suspension arm		
Suspension travel		mm (in)	216 (8.5)		
Shock absorber		Qty	2		
		Type	Oil	Gas	
Spring free length		mm (in)	319 (12-9/16)		329 (12-61/64)
Spring color code			Silver/White/Green		Silver/Green/Silver
Front preload adjustment			5 settings		

www.midwestmanuals.com

MODEL			RENEGADE™ 500	RENEGADE™ 800R	RENEGADE™ 800R X
SUSPENSION (cont'd)					
REAR					
Suspension type			TTI™ independent		
Suspension travel		mm (in)	229 (9)		
Shock absorber		Qty	2		
		Type	Oil	Gas	
Spring free length		mm (in)	381 (15)	348 (13-45/64)	384 (15-1/8)
Spring color code			White/Silver/Gold	Silver/Red/Silver	Silver/Blue/Silver
Rear preload adjustment			5 settings		
BRAKES					
Front brake		Qty	2		
		Type	Hydraulic, discs		
Rear brake		Qty	1		
		Type	Hydraulic, disc		
Brake fluid	Capacity		250 ml (8.5 U.S. oz)		
	Type		DOT 4		
Parking brake			Hydraulic lock/2 rear wheels		
Caliper			Floating		
Brake pad material	Front		Metallic		
	Rear		Metallic		
Minimum brake pad thickness		mm (in)	1 (.04)		
Minimum brake disc thickness	Front	mm (in)	3.5 (.138)		
	Rear	mm (in)	4.3 (.17)		
Maximum brake disc warpage		mm (in)	0.2 (.01)		
TIRES AND WHEELS					
TIRES					
Pressure	Front		Maximum: 48 kPa (7 PSI) Minimum: 34.5 kPa (5 PSI)		
	Rear		Maximum: 48 kPa (7 PSI) Minimum: 38 kPa (5.5 PSI)		
Minimum tire thread depth		mm (in)	3 (0.118)		
Size	Front		25 x 8 x 12		
	Rear		25 x 10 x 12		
WHEELS					
Size	Front		12 x 6		
	Rear		12 x 7.5		

www.midwestmanuals.com

MODEL			RENEGADE™ 500	RENEGADE™ 800R	RENEGADE™ 800R X
DIMENSION					
Overall length		m (in)	2.18 (86)		
Overall width		m (in)	1.17 (46)		
Overall height		m (in)	1.14 (45)		
Wheel base		m (in)	1.30 (51)		
Wheel track	Front	mm (in)	965 (38)		
	Rear	mm (in)	914 (36)		
Ground clearance		mm (in)	279 (11)		
WEIGHT AND LOADING CAPACITY					
Dry weight		kg (lb)	275 (607)		
Weight distribution	Front/rear	%	51/49		
Rear storage box		kg (lb)	3.7 (1)		
Rack	Rear	kg (lb)	16 (35)		
Total vehicle load allowed (including driver, all other loads and added accessories)		kg (lb)	141 (310)		
Gross vehicle weight rating		kg (lb)	476 (1050)		
Towing capacity		kg (lb)	590 (1300) CE models: 135(298)		
Tongue capacity (included with rear rack weight)		kg (lb)	23 (50) CE models: 13 (29)		



sales@midwestmanuals.com
www.midwestmanuals.com

www.midwestmanuals.com

NOTES

www.midwestmanuals.com

OUTLANDER 800/650/500 2009

GENERAL SYSTEM

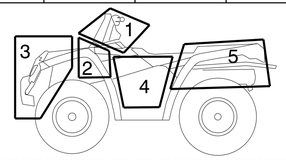

TERMINAL IDENTIFICATION		
	NAME	ZONE-CONNECTOR NAME-TERMINAL #/A
EX:	CI	1 - CI - 15
EX:	CV	4 - CV - A
EX:	ME	2 - ME

AWG	MAX. CURRENT	MAX. FUSE CURRENT	MAX. WATT
# 6	100 amps	125 amps	1450 watts
# 8	65 amps	80 amps	930 watts
# 10	40 amps	50 amps	580 watts
# 12	25 amps	30 amps	365 watts
# 14	16 amps	20 amps	230 watts
# 16	10 amps	15 amps	145 watts
# 18	6 amps	7.5 amps	85 watts
* AT	50°C MAX		

ZONE #	ZONE DESCRIPTION
1	STEERING AREA
2	MODULE AREA
3	FRONT OF VEHICLE
4	ENGINE AREA
5	REAR OF VEHICLE

●	WELDED JOINT
▬	SHRINKED JOINT
→	CROSSED WIRE
◢	WIRE BUS
—	SIMPLE CONDUCTOR WIRE
⊢	FEMALE TERMINAL
→	MALE TERMINAL
⊸	STEEL LINK (FRAME)
⊣	TERMINAL

⏚	FRAME GROUND
⏚	EGINE GROUND
⊕	PHILLIPS SCREW
⬡	NUT CONNECTION
●	SPLICE CONNECTION
⏢	COMPONENT CONNECTION
▭	SECTION OF MODULE
⊖	SLOTTED SCREW
- -	OPTIONAL

COLOR CODE	
BE	BEIGE
BK	BLACK
BU	BLUE
BN	BROWN
GN	GREEN
GY	GREY
OR	ORANGE
RD	RED
VI	VIOLET
WH	WHITE
YL	YELLOW
PK	PINK
LT BU	LIGHT BLUE

JT RD/GN
JT RD/GY
JT OR/GN
JT OR/BU
JT RD/BE
JT OR/BN
JT BK/GN
JT YL/BN
JT VI/BU
JT BE/GN
JT WH/BE
JT RD/BK
JT OR/RD
JT BK1
JT BK2
JT BK3
JT BK4
JT RD/OR
JT BU
JT GN

PF2 (1/2) MAIN FUSE (F8) 30 A
PF2 (2/2) FAN / ACCES. FUSE (F9) 30 A
CC (1/3) IGNITION KEY (DESS) — ON / OFF
PF1 MAIN RELAY (R2) 10 A
PF1 RELAYS SPEEDO FUSE (F4) 7.5 A
PF1 IGNITION COIL FUSE (F1) 5 A
HIC HARNESS INTER CONNECTION
SS STARTER SOLENOID
PF1 FREE WEELING DIODE (D2)
PF1 ONEWAY DIODE (D1)
PF1 FUEL PUMP FUSE (F5) 7.5 A
PF1 ECM FUSE (F6) 5 A
PF1 INJECTORS FUSE (F3) 5 A
BA IGNITION COIL
CI SPEEDOMETER & PILOT LAMPS — FUEL / ENGINE / 4WD / HI BEAM
BD 2WD/4WD SWITCH — 2WD / 4WD
SW WINCH RELAY
PF1 ACCESSORIES RELAY (R3) 30 A
PF1 FAN RELAY (R1) 10 A
PR TAIL LIGHT
PF1 ACCESSORIES FUSE (F7) 20 A
PF1 COOLING FAN FUSE (F2) 20 A
BAT BATTERY 12 VDC 18 AH
SM STARTER MOTOR
FP (1/2) FUEL PUMP
INJ1 FUEL INJECTOR (FRONT)
INJ2 FUEL INJECTOR (REAR)
FP (2/2) FUEL LEVEL SENSOR
SD 2WD/4WD ACTUATOR SWITCH
MD 2WD/4WD ACTUATOR
D5 ONE-WAY DIODE
D6 ONE-WAY DIODE
WM WINCH MOTOR
FT COOLING FAN
MG (3/4) MULTIFUNCTION SWITCH (STOP) — RUN / STOP
MG (1/4) MULTIFUNCTION SWITCH (START) — FREE / START
MG (2/4) MULTIFUNCTION SWITCH (OVERRIDE) — FREE / OVERRIDE
DB DIAGNOSTIC CONNECTOR
DC DC OPTION
DC DC OUTLET
CC (3/3) IGNITION KEY (LIGHTS) — OFF / LIGHT / ON
MG (4/4) MULTIFUNCTION SWITCH (LIGHTS) — LO / HI
SWW WINCH SWITCH — OUT / FREE / IN
SWRC REMOTE WINCH SWITCH — OUT / FREE / IN
HIC HARNESS INTER CONNECTION
SPK1 SPARK PLUG (FRONT)
SPK2 SPARK PLUG (REAR)
RD RECTIFIER — U V W –
CA MAGNETO 400 WATTS
CC (2/3) IGNITION KEY (ON) — OFF / ON / LIGHT
CTS COOLANT TEMP SENSOR
PRN SUBTRANSMISSION SWITCH
TPS TROTTLE POSITION SENSOR
MAPTS MANIFOLD AIR PRESSURE / TEMP SENSOR
OPS OIL PRESSURE SWITCH
IDLE IDLE BYPASS VALVE
CPS CRANK SHAFT POSITION SENSOR
PG LEFT HEAD LIGHT 35 W
PD RIGHT HEAD LIGHT 35 W
CV SPEED SENSOR
CAPS CAM SHAFT SENSOR
FRA BRAKE LIGHT SWITCH
ECM ENGINE CONTROL MODULE

VMR2008-062-100_AEN

710001317F1

www.midwestmanuals.com

OUTLANDER 500/650/800 CE 2009

EUROPE SYSTEM

NOTE: MUST BE USED IN CONJUNCTION WITH NORTH AMERICA WIRING DIAGRAM.

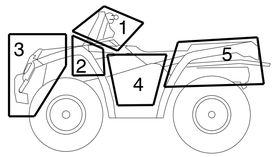

ZONE #	ZONE DESCRIPTION
1	STEERING AREA
2	MODULE AREA
3	FRONT OF VEHICLE
4	ENGINE AREA
5	REAR OF VEHICLE

COLOR CODE	
BE	BEIGE
BK	BLACK
BU	BLUE
BR	BROWN
GN	GREEN
GY	GREY
OR	ORANGE
RD	RED
VI	VIOLET
WH	WHITE
YL	YELLOW
PK	PINK
LT BU	LIGHT BLUE

JT RD/GN
JT RD/GY
JT OR/GN2
JT OR/GN1
JT RD/BE
JT RD/BK
JT BR
JT GY
JT BK1
JT BK2
JT BK3
JT BK4
JT BK5

PF2 (1/2) MAIN FUSE (F8) 30 A
PF2 (2/2) FAN / ACCES. FUSE (F9) 30 A
PF1 MAIN RELAY (R2) 30 A
PF1 RELAYS SPEEDO FUSE (F4) 7.5 A
PF1 ACCESSORIES RELAY (R3) 30 A
PF1 CONTROL EURO FUSE (F10) 5A
PF1 ACCESSORIES FUSE (F7) 20 A

CI SPEEDOMETER & PILOT LAMPS
HI BEAM
FLASHER
POSITION

SS STARTING SOLENOID

BAT BATTERY 12 VDC 18 AH

FLASHER
FREE
RH
LH

HASARD SWITCH
FREE
RUN

HORN
FREE
RUN

MC1 FLASHER UNIT
HAZARD

CAD FRONT RIGHT FLASHER 10 W
CRD REAR RIGHT FLASHER 10 W
CRG REAR LEFT FLASHER 10 W
CAG FRONT LEFT FLASHER 10 W

PPG LEFT POSITION LIGHT 5 W
PPD RIGHT POSITION LIGHT 5 W

D3
D4

www.midwestmanuals.com

RENEGADE 800 2009

GENERAL SYSTEM

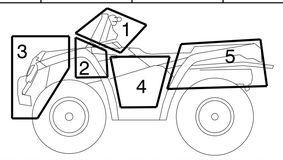

TERMINAL IDENTIFICATION		
	NAME	ZONE-CONNECTOR NAME-TERMINAL #/A
EX:	CI	1 - CI - 15
EX:	CV	4 - CV - A
EX:	ME	2 - ME

AWG	MAX. CURRENT	MAX. FUSE CURRENT	MAX. WATT
# 6	100 amps	125 amps	1450 watts
# 8	65 amps	80 amps	930 watts
# 10	40 amps	50 amps	580 watts
# 12	25 amps	30 amps	365 watts
# 14	16 amps	20 amps	230 watts
# 16	10 amps	15 amps	145 watts
# 18	6 amps	7.5 amps	85 watts

* AT 50°C MAX

ZONE #	ZONE DESCRIPTION
1	STEERING AREA
2	MODULE AREA
3	FRONT OF VEHICLE
4	ENGINE AREA
5	REAR OF VEHICLE

- WELDED JOINT
- SHRINKED JOINT
- CROSSED WIRE
- WIRE BUS
- SIMPLE CONDUCTOR WIRE
- FEMALE TERMINAL
- MALE TERMINAL
- STEEL LINK (FRAME)
- TERMINAL
- FRAME GROUND
- EGINE GROUND
- PHILLIPS SCREW
- NUT CONNECTION
- SPLICE CONNECTION
- COMPONENT CONNECTION
- SECTION OF MODULE
- SLOTTED SCREW
- OPTIONAL

COLOR CODE	
BE	BEIGE
BK	BLACK
BU	BLUE
BN	BROWN
GN	GREEN
GY	GREY
OR	ORANGE
RD	RED
VI	VIOLET
WH	WHITE
YL	YELLOW
PK	PINK
LT BU	LIGHT BLUE

JT RD/GN
JT RD/GY
JT OR/GN2
OR/VE-16
JT OR/GN1
PF2 (1/2) MAIN FUSE (F8) 30 A
PF2 (2/2) FAN / ACCES. FUSE (F9) 30 A
CC (1/3) IGNITION KEY (DESS) ON OFF
PF1 MAIN RELAY (R2) 10 A
PF1 RELAYS SPEEDO FUSE (F4) 7.5 A
PF1 IGNITION COIL FUSE (F1) 5 A
HIC HARNESS INTER CONNECTION
CI SPEEDOMETER & PILOT LAMPS
BD 2WD/4WD SWITCH 2WD 4WD
SW WINCH RELAY
PF1 ACCESSORIES RELAY (R3) 30 A
PF1 FAN RELAY (R1) 10 A
SS STARTER SOLENOID
PF1 FREE WEELING DIODE (D2)
JT OR/BU
PF1 ONEWAY DIODE (D1)
JT RD/BE
PF1 FUEL PUMP FUSE (F5) 7.5 A
PF1 ECM FUSE (F6) 5 A
PF1 INJECTORS FUSE (F3) 5 A
BA IGNITION COIL
FP (2/2) FUEL LEVEL SENSOR
HIC HARNESS INTER CONNEC-TION
SD 2WD/4WD ACTUATOR SWITCH
MD 2WD/4WD ACTUATOR
D5 ONE-WAY DIODE
D6 ONE-WAY DIODE
WM WINCH MOTOR
PR TAIL LIGHT
PF1 ACCESSORIES FUSE (F7) 20 A
PF1 COOLING FAN FUSE (F2) 20 A
JT RD/BK
JT VI/BU
INJ1 FUEL INJECTOR (FRONT)
INJ2 FUEL INJECTOR (REAR)
HIC HARNESS INTER CONNECTION
JT BK/GN
JT YL/BR
FP (1/2) FUEL PUMP
JT BE/GN
DB DIAGNOSTIC CONNECTOR
SPK1 SPARK PLUG (FRONT)
SPK2 SPARK PLUG (REAR)
BAT BATTERY 12 VDC 18 AH
SM STARTER MOTOR
RUN STOP
MG (3/4) MULTIFUNCTION SWITCH (STOP)
JT OR/BR
JT OR/RD
DC DC OPTION
DC DC OUTLET
OFF ON LIGHT ON
CC (3/3) IGNITION KEY (LIGHTS)
OUT FREE IN
SWW WINCH SWITCH
HIC HARNESS INTER CONNECTION
FT COOLING FAN
JT RD/OR
JT WH/BE
MG (4/4) MULTIFUNCTION SWITCH (LIGHTS) LO HI
JT BU
JT GN
RD RECTIFIER
U V W –
ECM ENGINE CONTROL MODULE
MG (1/4) MULTIFUNCTION SWITCH (START) FREE START
MG (2/4) MULTIFUNCTION SWITCH (OVERRIDE) FREE OVERRIDE
CA MAGNETO 400 WATTS
CTS COOLANT TEMP SENSOR
CC (2/3) IGNITION KEY (ON) OFF ON LIGHT ON
PRN SUBTRANSMISSION SWITCH
TPS TROTTLE POSITION SENSOR
MAPTS MANIFOLD AIR PRESSURE / TEMP SENSOR
OPS OIL PRESSURE SWITCH
IDLE IDLE BYPASS VALVE
CPS CRANK SHAFT POSITION SENSOR
PGH LEFT HEAD LIGHT (HI) 35 W
PDH RIGHT HEAD LIGHT (HI) 35 W
PGB LEFT HEAD LIGHT (LO) 35 W
PDB RIGHT HEAD LIGHT (LO) 35 W
CV SPEED SENSOR
CAPS CAM SHAFT SENSOR
FRV BRAKE LIGHT SWITCH
FRR BRAKE LIGHT SWITCH
JT BK1
JT BK2
JT BK3
JT BK4

VMR2008-062-200_AEN

710001360F1

www.midwestmanuals.com

RENEGADE 500/650/800 CE 2009

EUROPE SYSTEM

NOTE: MUST BE USED IN CONJUNCTION WITH NORTH AMERICA WIRING DIAGRAM.

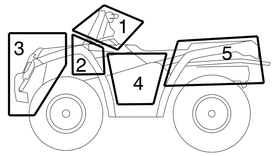

ZONE #	ZONE DESCRIPTION
1	STEERING AREA
2	MODULE AREA
3	FRONT OF VEHICLE
4	ENGINE AREA
5	REAR OF VEHICLE

COLOR CODE	
BE	BEIGE
BK	BLACK
BU	BLUE
BR	BROWN
GN	GREEN
GY	GREY
OR	ORANGE
RD	RED
VI	VIOLET
WH	WHITE
YL	YELLOW
PK	PINK
LT BU	LIGHT BLUE

JT RD/GN
JT RD/GY
JT OR/GN2
JT OR/GN1
RD/GY-12
RD/GN-12
RD/GY-14
OR/GN-14
OR/GN-18
RD/GN-14
PF2 (1/2) MAIN FUSE (F8) 30 A
PF2 (2/2) FAN / ACCES. FUSE (F9) 30 A
PF1 MAIN RELAY (R2) 30 A
PF1 RELAYS SPEEDO FUSE (F4) 7.5 A
PF1 ACCESSORIES RELAY (R3) 30 A
CI SPEEDOMETER & PILOT LAMPS
HI BEAM
FLASHER
POSITION
PF1 CONTROL EURO FUSE (F10) 5 A
RD/BE-14
RD/YL-14
RD/WH-16
JT RD/BE
OR
SS STARTING SOLENOID
PF1 ACCESSORIES FUSE (F7) 20 A
RD/BK-14
JT RD/BK
RD-6
BK-6
BK-12
BK-18
BAT BATTERY 12 VDC 18 AH
FLASHER
FREE
RH
LH
HASARD SWITCH
FREE
RUN
HORN
FREE
RUN
BK/PK
RD/BK
RD/WH
BE/GY
BE/BR
BE/RD
HAZARD
MC1 FLASHER UNIT
D4
D3
BR
GY
BE/BU
BR-18
GY-18
BK-20
CAD FRONT RIGHT FLASHER 10 W
CRD REAR RIGHT FLASHER 10 W
CRG REAR LEFT FLASHER 10 W
CAG FRONT LEFT FLASHER 10 W
HORN
JT BK1
JT BK2
JT BK3
JT BK4
JT BK5
JT BK6
BK-16

VMR2008-062-501_AEN

710001317F17

www.midwestmanuals.com

can-am™

BRP

2010

DPS™/ACS Technical Manual

219 100 388 CA

DPS/ACS TECHNICAL MANUAL / ENGLISH
MANUEL TECHNIQUE DPS/ACS / ANGLAIS

FAIT AU / MADE IN CANADA U/M:P.C.

®™ AND THE BRP LOGO ARE TRADEMARKS OF BOMBARDIER RECREATIONAL PRODUCTS INC. OR ITS AFFILIATES.
©2009 BOMBARDIER RECREATIONAL PRODUCTS INC. ALL RIGHTS RESERVED. PRINTED IN CANADA.

219 100 388

www.midwestmanuals.com

2010
DPS/ACS
Technical Manual

can-am™ BRP

www.midwestmanuals.com

TABLE OF CONTENTS

SAFETY NOTICE II

INTRODUCTION III
COLOR CODE LEGEND III

01 TECHNICAL MANUAL
01 – DYNAMIC POWER STEERING (DPS) 3
GENERAL 5
SYSTEM DESCRIPTION (FEATURES) 5
SYSTEM DESCRIPTION (COMPONENTS) 6
ADJUSTMENT 7
TORQUE OFFSET RESET 7
DPS ASSIST MODE 7
TROUBLESHOOTING 8
PROCEDURES 9
DPS UNIT 9
PITMAN ARM 22
02 – AIR CONTROLLED SUSPENSION (ACS) 23
GENERAL 25
SYSTEM DESCRIPTION (FEATURES) 25
SYSTEM DESCRIPTION (COMPONENTS) 27
TROUBLESHOOTING 30
DIAGNOSTIC TIPS 30
TROUBLESHOOTING GUIDELINES 30
TROUBLESHOOTING WITH B.U.D.S. 31
PROCEDURES 31
ACS SOLENOID VALVE 31
ACS MANIFOLD 33
ACS MODULE 35
ACS COMPRESSOR RELAY (R5) 37
ACS COMPRESSOR 37
ACS AIR FILTER 42
PRESSURE TRANSDUCER (ACS AUXILIARY LINE) 43
ACS HOSES 44
SHOCK ABSORBERS 45

Midwest Manuals
sales@midwestmanuals.com
www.midwestmanuals.com

www.midwestmanuals.com

SAFETY NOTICE

This manual has been prepared as a guide to correctly service and repair the DPS™ and ACS systems on 2010 Can-Am™ ATVs.

This edition was primarily published to be used by mechanical technicians who are already familiar with all service procedures relating to BRP products. Mechanical technicians should attend training courses given by B.R.P.T.I.

Please note that the instructions will apply only if proper hand tools and special service tools are used.

It is understood that this manual may be translated into another language. In the event of any discrepancy, the English version shall prevail.

The content depicts parts and/or procedures applicable to the particular product at time of writing. Service and Warranty Bulletins may be published to update the content of this manual. Make sure to read and understand these. It does not include dealer modifications, whether authorized or not by BRP, after manufacturing the product.

In addition, the sole purpose of the illustrations throughout the manual, is to assist identification of the general configuration of the parts. They are not to be interpreted as technical drawings or exact replicas of the parts.

The use of BRP parts is most strongly recommended when considering replacement of any component. Dealer and/or distributor assistance should be sought in case of doubt.

The engines and the corresponding components identified in this document should not be utilized on product(s) other than those for which it was designed.

⚠ WARNING

Unless otherwise specified, engine should be turned OFF and cold for all maintenance and repair procedures.

This manual emphasizes particular information denoted by the wording and symbols:

⚠ WARNING

Indicates a potential hazard, if not avoided, could result in serious injury or death.

⚠ CAUTION Indicates a hazard situation which, if not avoided, could result in minor or moderate injury.

NOTICE **Indicates an instruction which, if not followed, could severely damage vehicle components or other property.**

NOTE: Indicates supplementary information needed to fully complete an instruction.

Although the mere reading of such information does not eliminate the hazard, your understanding of the information will promote its correct use. Always use common shop safety practice.

BRP disclaims liability for all damages and/or injuries resulting from the improper use of the contents. We strongly recommend that any services be carried out and/or verified by a highly skilled professional mechanic. It is understood that certain modifications may render use of the vehicle illegal under existing federal, provincial and state regulations.

www.midwestmanuals.com

INTRODUCTION

This Technical Manual covers the following BRP made 2010 Can-Am ATVs with a DPS or ACS system.

OUTLANDER™			
ENGINE	MODEL	COLOR	MODEL NUMBER
500	XT	Yellow, Red, Camo	2UAA, 2UAB, 2UAC, 2UAD, 2UAE
	XT-P	Black	5JAB
	MAX XT	Yellow, Red, Camo	2XAA, 2XAB, 2XAC, 2XAD, 2XAE
	MAX XT-P	Black	5KAC
	MAX LTD	Steel grey	5NAA
650	XT	Yellow, Red, Camo	2PAA, 2PAB, 2PAC, 2PAD, 2PAE, 2PAF
	XT-P	Black	5GAB
	MAX XT	Yellow, Red, Camo	2SAA, 2SAB, 2SAC, 2SAD, 2SAE, 2SAF
	MAX XT-P	Black	5HAC
800R	XT	Yellow, Red, Camo	2JAA, 2JAB, 2JAC, 2JAE, 2JAF
	XT-P	Black	5EAB, 5EAE
	MAX XT	Yellow, Red, Camo	2LAA, 2LAB, 2LAC, 2LAD, 2LAF
	MAX XT-P	Black	5FAC, 5FAF, 5FAJ
	MAX LTD	Red, Steel grey	2MAA, 2MAB, 2MAC, 2MAD

RENEGADE™			
ENGINE	MODEL	COLOR	MODEL NUMBER
800R	X xc	Black	4DAA, 4DAB, 4DAC

The information and component/system descriptions contained in this manual are correct at time of writing. BRP however, maintains a policy of continuous improvement of its products without imposing upon itself any obligation to install them on products previously manufactured.

Due to late changes, there may be some differences between the manufactured product and the description and/or specifications in this document.

BRP reserves the right at any time to discontinue or change specifications, designs, features, models or equipment without incurring obligation.

COLOR CODE LEGEND

COLOR CODE					
BE	=	BEIGE	OR	=	ORANGE
BK	=	BLACK	PK	=	PK
BU	=	BLUE	RD	=	RED
BR	=	BROWN	VI	=	VIOLET
GN	=	GREEN	WH	=	WHITE
GR	=	GRAY	YL	=	YELLOW

www.midwestmanuals.com

www.midwestmanuals.com

SERVICE TOOLS INDEX

FLUKE 115 MULTIMETER
(P/N 529 035 868)



Page: 9, 11, 32, 35, 37–38, 43–44

OETIKER PLIERS
(P/N 295 000 070)

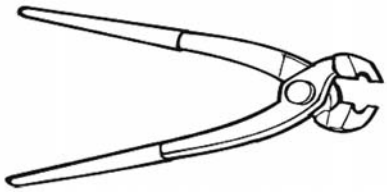

Page: 44

SPRING REMOVER
(P/N 529 036 007)



Page: 46

www.midwestmanuals.com

www.midwestmanuals.com

DYNAMIC POWER STEERING (DPS)

SERVICE TOOLS

Description	Part Number	Page
FLUKE 115 MULTIMETER	529 035 868	9, 11

SERVICE TOOLS – OTHER SUPPLIER

Description	Part Number	Page
SNAP-ON® TELESCOPING GAUGE SET	LST 52616	20

SERVICE PRODUCTS

Description	Part Number	Page
XPS SYNTHETIC GREASE	293 550 010	19

Midwest Manuals
sales@midwestmanuals.com
www.midwestmanuals.com

www.midwestmanuals.com

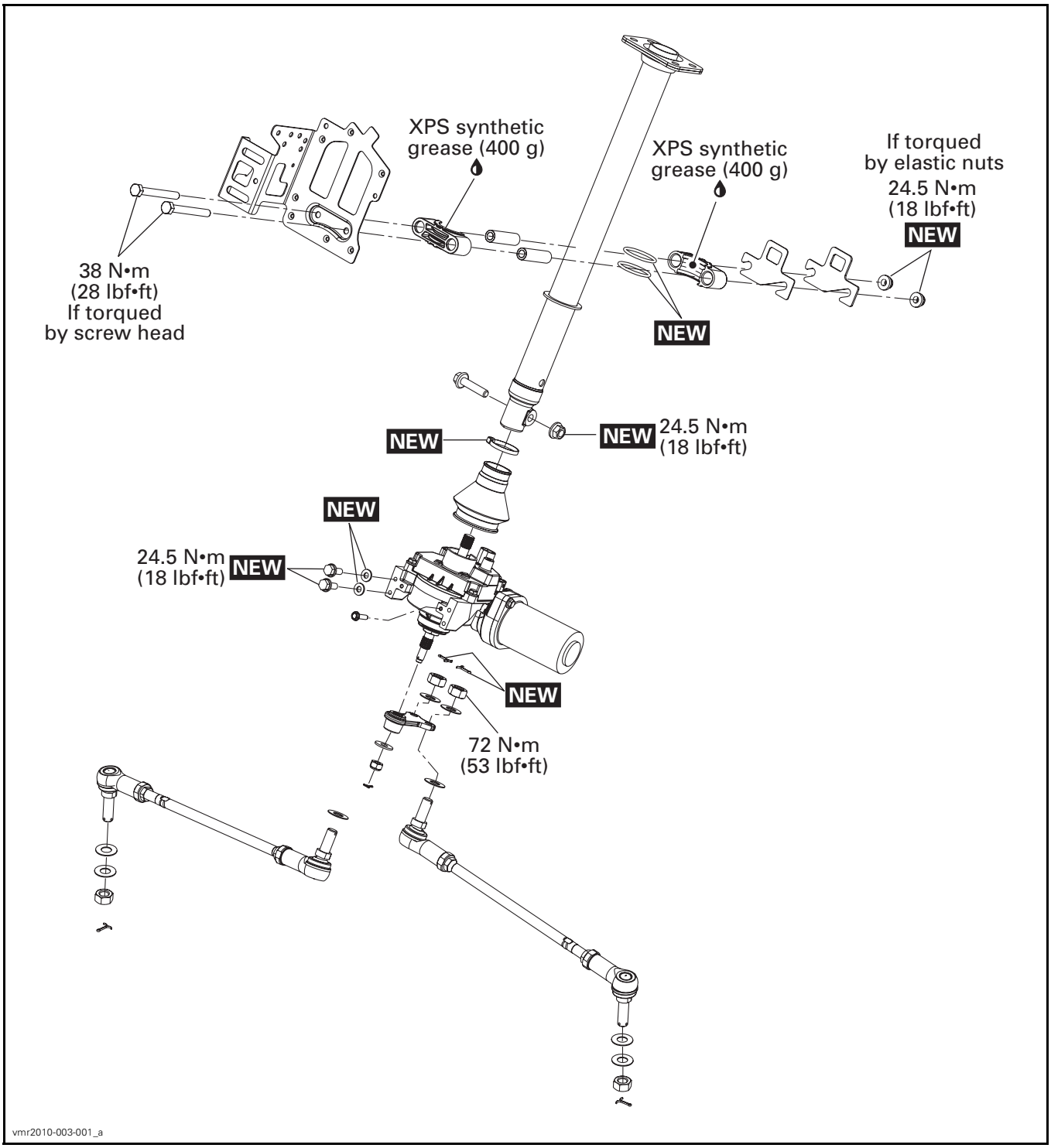

www.midwestmanuals.com

GENERAL

During assembly/installation, use the torque values and service products as in the exploded view.

⚠ WARNING

Torque wrench tightening specifications must be strictly adhered to.
Locking devices (e.g.: locking tabs, elastic stop nuts, cotter pins, etc.) must be replaced.

Hoses, cables or locking ties removed during a procedure must be reinstalled as per factory standards.

SYSTEM DESCRIPTION (FEATURES)

The Dynamic Power Steering (DPS) provides a computer controlled, variable power assist, achieved by an electric motor to optimize the amount of steering input required by the rider.

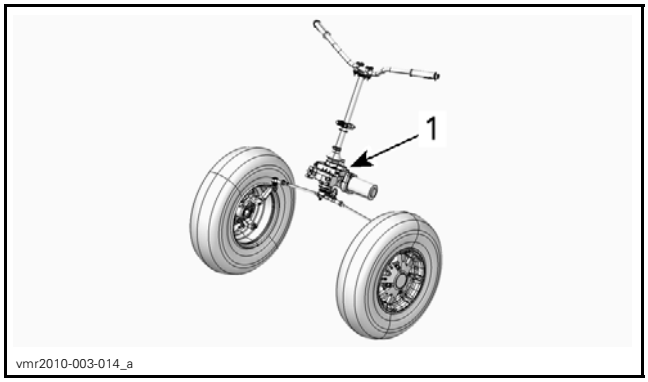

1. Dynamic power steering unit (DPS)

The DPS system uses the following parameters to determine how much steering assist it provides:

– Engine RPM
– Battery/electrical system voltage
– Vehicle speed
– DPS shaft torque sensor input.

The amount of steering assist provided is dependent on the handlebar effort (steering torque), electrical power available, and vehicle speed.

The greater the handlebar effort (torque), the greater the assist will be.

The slower the vehicle speed, the greater the assist will be.

If the electrical system is activated but the engine is **not** running, there is **no** power assist provided.

When the handlebar is in the straight ahead position, there is no steering assist.

Steering torque may also come from the wheels due to rough terrain. Steering kickback is reduced while providing feedback to the driver.

The greater the power steering assist, the greater the load on the electrical system.

When the electrical system is under high load (battery not at full charge, operating the vehicle for prolonged periods of time at slow speed and low RPM which, requires higher power steering assist), the battery power reserve will gradually decrease. This further increases the load on the charging system and the electrical system voltage will drop. As system voltage drops, so does power steering assist.

NOTE: It is important to maintain the battery at a full state of charge to ensure proper DPS operation. The magneto output is increased to 650 watts minimize battery drain and system voltage drop.

DPS Assist Mode

The DPS system normally provides two rider selectable modes of operation.

DPS MAX provides maximum steering assist for technical low speed riding in rough or muddy terrain, or for touring.

DPS MIN provides less steering assist for increased feedback and aggressive trail riding.

A third mode of operation is available as an accessory to adjust the steering assist level for operation with an approved BRP track kit.

How to View DPS Assist Mode Selection

1. **To view** the active DPS ASSIST mode, press and release the OVERRIDE/DPS button on the LH multifunction switch assembly.



1. OVERRIDE/DPS button

www.midwestmanuals.com

The active DPS mode will be displayed in the lower portion of multifunction gauge.

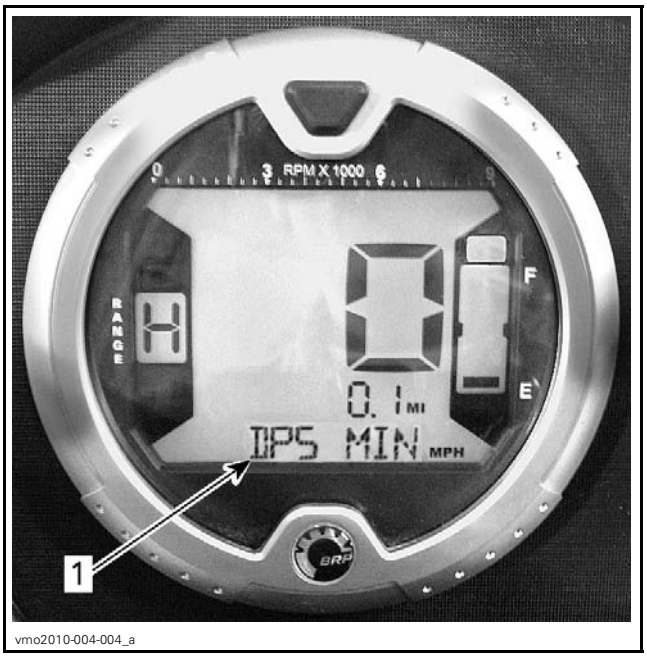

1. DPS mode indication

How to Change DPS Assist Mode

To change DPS ASSIST mode, press and hold the OVERRIDE/DPS button for approximately 4 seconds, the DPS system will toggle to the other available mode. The newly activated DPS mode will be briefly displayed in the multifunction gauge.

NOTE: The DPS mode cannot be changed if the vehicle is in reverse, of if the ACS mode is displayed in the multifunction gauge on vehicles equipped with an Air Controlled Suspension.

SYSTEM DESCRIPTION (COMPONENTS)

DPS Unit

The DPS unit is a self contained unit that includes the steering gear, the DPS module, the DPS motor, and the torque sensor.

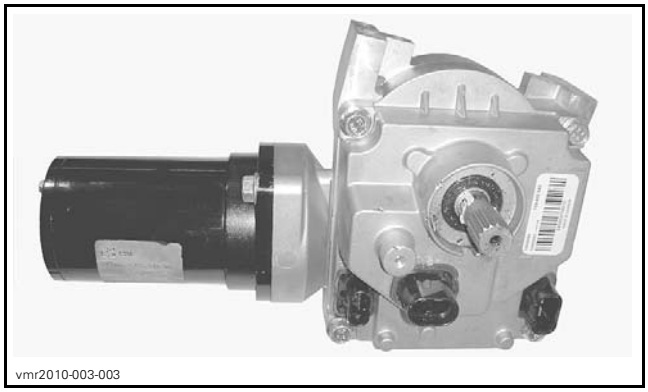

DPS UNIT

The DPS module provides DC power to the motor. The amount and duration of that DC power is determined by the inputs to the DPS module. The direction in which the motor turns is changed by reversing the polarity of the circuit current.

The DPS motor does not "spin", but rather turns in very small increments based on the amount, duration, and direction of DC power delivered by the DPS module.

DPS Unit Protection

To protect the DPS electronic components, the steering assist behavior will change as follows.

CONDITION	DPS BEHAVIOR
When motor internal temperature reaches a certain temperature (DPS continuously estimates it)	Steering assist will gradually decrease.
DPS internal board temperature is above 85°C (185°F)	
DPS internal board temperature is above 100°C (212°F)	Steering assist is stopped.

When the DPS unit temperature is back within normal operating range:

– Turn the ignition key OFF.
– Wait 30 seconds.
– Turn the ignition key ON.

Steering assist should resume normal operation.

www.midwestmanuals.com

Steering Torque Sensor

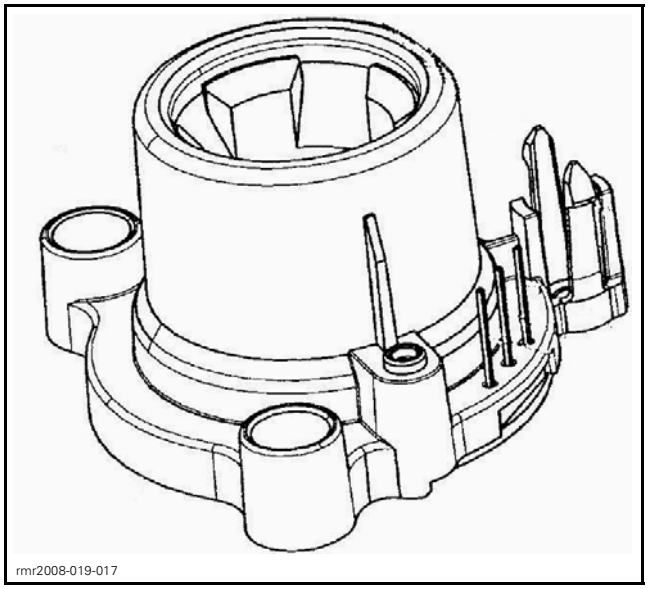
rmr2008-019-017

The steering column is connected to the shaft on the DPS unit. A small area of the DPS shaft is magnetized. Inside the DPS unit, a torque sensor surrounds the magnetized area of the DPS shaft.

When the handlebar is turned, torque is applied to the shaft which tends to twist the shaft slightly, deforming the magnetic field in the shaft. The sensor detects the torque by measuring the deviation of the magnetic field.

The torque sensor is very sensitive and can detect very small changes in the magnetic field. The harder the handlebar is turned, the greater the magnetic deviation, the greater the power steering assist.

ADJUSTMENT

TORQUE OFFSET RESET

When replacing the following parts or adjusting steering alignment, the sensor torque offset must be reset to zero) for proper system operation.

PART ADJUSTED OR REPLACED	WHAT TO DO
– DPS unit – Steering column bearing – Tie rod – Tie rod end – Knuckle – Wheel bearing – Ball joint – Front suspension arm (lower/upper) – Steering alignment	Reset Torque Offset in **Setting, DPS**

1. Ensure proper *STEERING ALIGNMENT*, refer to appropriate Shop Manual subsection.
2. Connect vehicle to the latest B.U.D.S. software.
3. In B.U.D.S., select **Read Data**.
4. Choose the **Setting** tab.
5. At the bottom LH corner of the **Setting** page, choose the **DPS** tab.

NOTICE **Ensure handlebar is free and centered within ±10 degrees of center position. There MUST NOT be any effort applied to the steering column.**

6. Press **Reset Torque Offset** button.

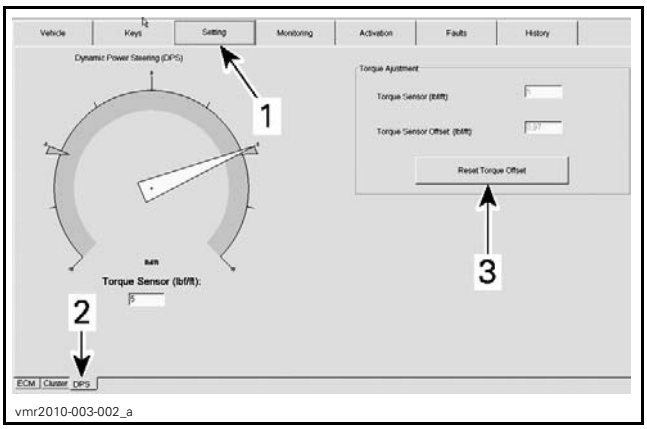

vmr2010-003-002_a

DPS TORQUE OFFSET RESET
1. *Setting page tab*
2. *DPS tab*
3. *Reset Torque Offset button*

DPS ASSIST MODE

1. **To view** the active DPS ASSIST mode, press and release the OVERRIDE/DPS button on the LH multifunction switch assembly.

www.midwestmanuals.com



1. OVERRIDE/DPS button

The active DPS mode will be displayed in the lower portion of multifunction gauge.

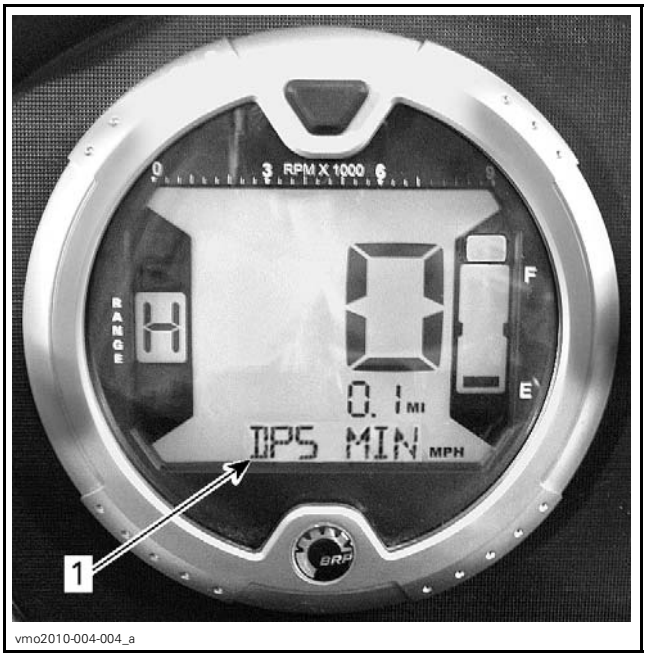

1. DPS mode indication

2. **To change** DPS ASSIST mode, press and hold the OVERRIDE/DPS button for approximately 4 seconds, the DPS system will toggle to the other available mode. The newly activated DPS mode will be briefly displayed in the multifunction gauge.

NOTE: The DPS mode of operation cannot be changed if the vehicle is in reverse, of if the ACS mode is displayed in the multifunction gauge.

TROUBLESHOOTING

NO POWER STEERING ASSIST

1. DPS malfunction.
   - *If the CHECK ENGINE light is on and a DPS FAULT message is visible in the gauge, check for fault codes using B.U.D.S. and carry out service action.*
2. No power to DPS unit.
   - *Carry out a DPS UNIT FUSE TEST as detailed in this subsection. Replace as required.*
   - *Carry out a DPS UNIT INPUT VOLTAGE TEST (POWER SIDE) as detailed in this subsection. Repair or replace wiring/connectors as required.*
   - *Carry out a DPS UNIT INPUT VOLTAGE TEST (CONTROL SIDE) as detailed in this subsection. Repair or replace wiring/connectors as required.*
3. No ground to DPS unit.
   - *Carry out a DPS UNIT GROUND CIRCUIT TEST as detailed in this subsection. Repair or replace wiring/connectors as required.*
4. No engine RPM signal from ECM.
   - *If engine RPM can be displayed in the multifunction gauge when the engine is running, carry out a DPS UNIT COMMUNICATION LINK (CAN) CONTINUITY TEST as detailed in this subsection. Repair or replace wiring/connector as required.*
   - *If engine RPM cannot be displayed in the multifunction gauge, use B.U.D.S. to check for applicable fault codes. Carry out service actions.*

LOW POWER STEERING ASSIST

1. Low battery voltage.
   - *Check battery terminals. Clean, repair, replace or tighten as required.*
   - *Test battery voltage. Recharge or replace battery as required.*
   - *Carry out a DPS UNIT INPUT VOLTAGE TEST (POWER SIDE) as detailed in this subsection. Ensure power connector pins (DPS2-A and DPS2-B) are clean, corrosion free, tight, and make good contact. Repair or replace wiring/connectors as required.*
   - *Carry out a DPS UNIT GROUND CIRCUIT TEST as detailed in this subsection. Ensure ground post connections and DPS connector pins are clean, corrosion free, tight, and make good contact. Repair or replace wiring/connectors as required.*
   - *Carry out a DPS SYSTEM LOAD TEST as detailed in this subsection.*
2. Low input voltage to DPS unit.
   - *Carry out a DPS UNIT INPUT VOLTAGE TEST (POWER SIDE) as detailed in this subsection. Ensure power connector pins (DPS2-A and DPS2-B) are clean, corrosion free, tight, and make good contact. Repair or replace wiring/connectors as required.*

www.midwestmanuals.com

3. Faulty DPS ground circuit.
   - *Carry out a DPS UNIT GROUND CIRCUIT TEST. Ensure DPS ground connector pins (DPS3-A and DPS3-B) and frame ground post are clean, corrosion free, tight, and make good contact. Repair or replace wiring/connector as required.*

ASYMMETRICAL POWER STEERING ASSIST (SIDE TO SIDE)

1. Torque sensor not reset to zero.
   - *Ensure steering alignment is within specification and carry out the TORQUE OFFSET RESET procedure detailed in this subsection.*

DPS WILL NOT CHANGE MODES OF OPERATION

1. Faulty OVERRIDE/DPS switch.
   - *Set transmission to reverse with engine running.*
   - *Press the OVERRIDE/DPS button.*
   - *Look for the OVERRIDE message to appear in the multifunction gauge. If it comes on, button and wiring to gauge are good.*
   - *If OVERRIDE message does not appear in gauge, test drive vehicle to determine if OVERRIDE function can be activated. If the function can* not *be activated, test the OVERRIDE/DPS switch and wiring. If the function* is *activated, test wiring from switch to multifunction gauge.*

PROCEDURES

DPS UNIT

DPS Unit Power Fuse Test

A 40 A DPS fuse located in the rear fuse box (PF2-F3) next to the voltage regulator/rectifier unit provides power for the DPS motor.



TYPICAL - OUTLANDER 800R LTD ILLUSTRATED
1. Rear fuse box (PF2)

1. To remove fuse box cover, simultaneously squeeze tabs inwards on each end of fuse box cover as you pull on the cover.

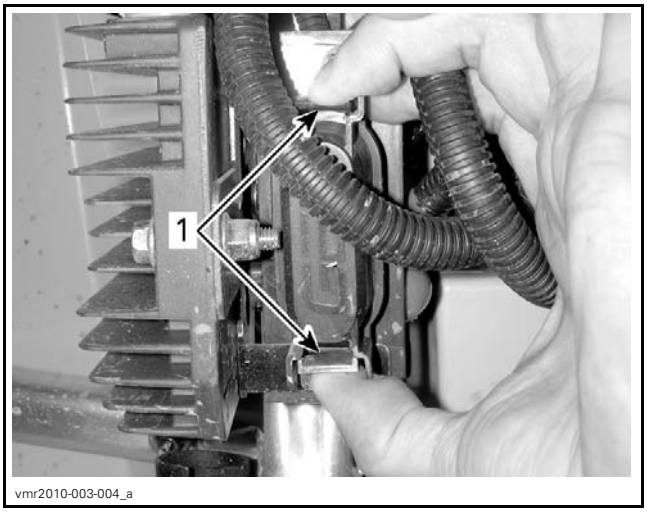

1. Squeeze and pull these tabs to remove cover

2. Using a FLUKE 115 MULTIMETER (P/N 529 035 868) set to Ω selection, remove and test the DPS fuse.



www.midwestmanuals.com

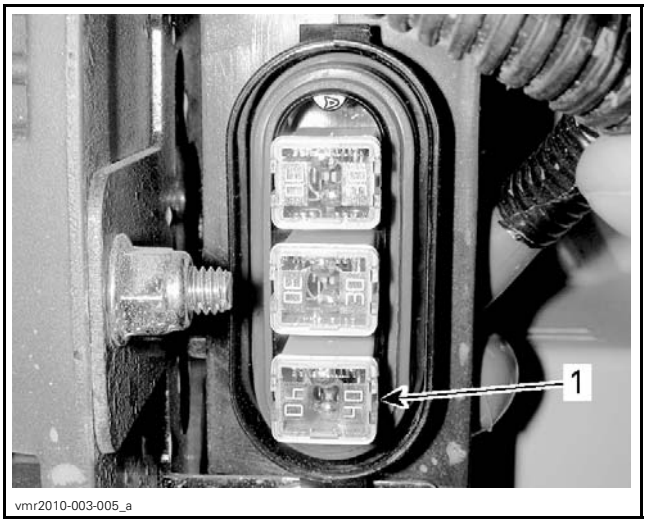

1. 40 amp DPS fuse (PF2-F3)

3. Replace fuse as required.

DPS Unit Input Voltage Test (Power Side)

1. Disconnect the DPS PWR (power) connector.

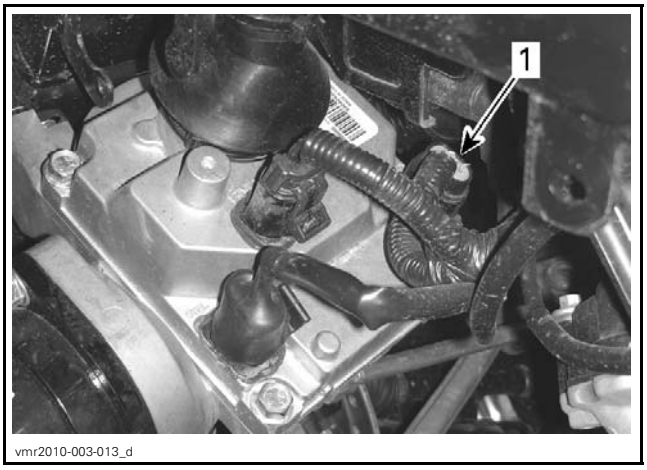

1. DPS PWR connector (motor power)

2. Test for 12 Vdc DPS motor power at DPS2-A and DPS2-B as per following table.

MULTIMETER PROBE POSITIONS		VOLTAGE
DPS power connector pin A	Battery ground	Battery voltage
DPS power connector pin B		
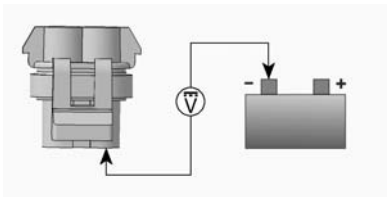 rmr2008-028-091_a		

If NO voltage is measured, test the 40 A DPS fuse in the rear fuse box (PF2-F3). If good, check wires and connector pins. Replace or repair defective parts and reset fault codes.

If battery voltage is measured, carry out the following *DPS UNIT INPUT VOLTAGE TEST (CONTROL SIDE)*.

NOTE: This test may also be carried out by connecting a 12 Vdc test light between each DPS PWR connector pins (A and B), and the battery (-) negative terminal. The test light must come on bright.

DPS Unit Input Voltage Test (Control Side)

1. Disconnect DPS CTRL (control) connector and turn ignition switch ON.
2. Set the ignition switch to ON.
3. Set the engine RUN/STOP switch to RUN.
4. Test for 12 Vdc power to the DPS module at DPS1-A as per following table.

MULTIMETER PROBE POSITIONS	VOLTAGE
DPS control connector (pin A) and battery ground	Battery voltage
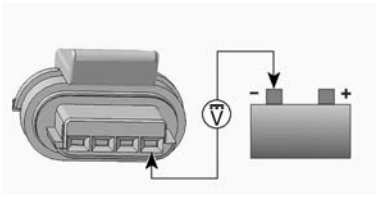 rmr2008-028-093_a	

If NO voltage is measured, check wires and connector pins from DPS unit to the Relays/Speedo fuse in front fuse box (PF1-F4). Replace or repair defective parts and reset fault codes.

If battery voltage is measured, carry out the following *DPS UNIT GROUND CIRCUIT TEST*.

NOTE: This test may also be carried out by connecting a 12 Vdc test light between the DPS control connector (pin A), and the battery (-) negative terminal. The test light must come on bright.

DPS Unit Ground Circuit Test

1. Disconnect the DPS ground connector (GDN).

www.midwestmanuals.com

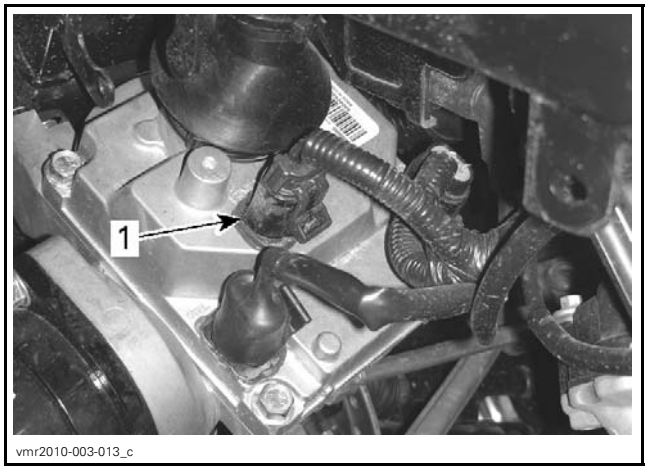

1. DPS ground connector (GDN)

2. Test for continuity between DPS3-A and DPS3-B to battery ground.

MULTIMETER PROBE POSITIONS		READING
DPS GDN connector pin A	Battery ground	Continuity (close to 0 Ω)
DPS GDN connector pin B		

If there is NO continuity or a high resistance is measured, check wires and connector pins from DPS unit to chassis ground post. Replace or repair defective parts and reset fault codes.

If there is good continuity, carry out the following *DPS UNIT COMMUNICATION LINK (CAN) CONTINUITY TEST*.

NOTE: This test may also be carried out by connecting a 12 Vdc test light between each GDN connector pin and the battery (+) positive terminal. The test light must come on bright.

DPS Unit Communication Link (CAN) Continuity Test

NOTE: DPS unit must receive an RPM signal to provide power steering assist.

Disconnect the DPS control connector and the diagnostic connector.

Test continuity of CAN Bus Wires at DPS1-C and DPS1-D.

MULTIMETER PROBE POSITIONS	RESISTANCE @ 20°C (68°F)
DPS control connector (pin C) and diagnostic connector (pin 1)	Below 1 Ω
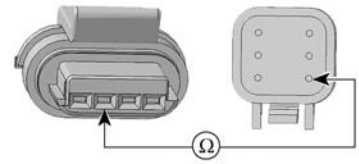 rmr2008-028-094_a	
DPS control connector (pin D) and diagnostic connector (pin 2)	
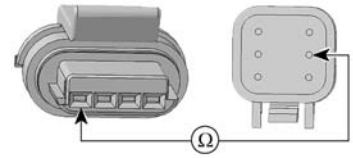 rmr2008-028-094_b	

If resistance measured is out of specification, check wires and connector pins. Carry out repairs as required and reset fault codes using B.U.D.S software.

If resistance measured is good, replace the DPS unit and reset fault codes using B.U.D.S software.

DPS System Load Test

If the charging system cannot sustain normal voltage when the DPS is operating, DPS ASSIST may be greatly reduced or nonexistent. Carry out the following steps.

1. Connect the red lead of a FLUKE 115 MULTIMETER (P/N 529 035 868) set to Vdc to the rear fuse box battery terminal.
2. Connect the black multimeter lead to the battery ground.

www.midwestmanuals.com

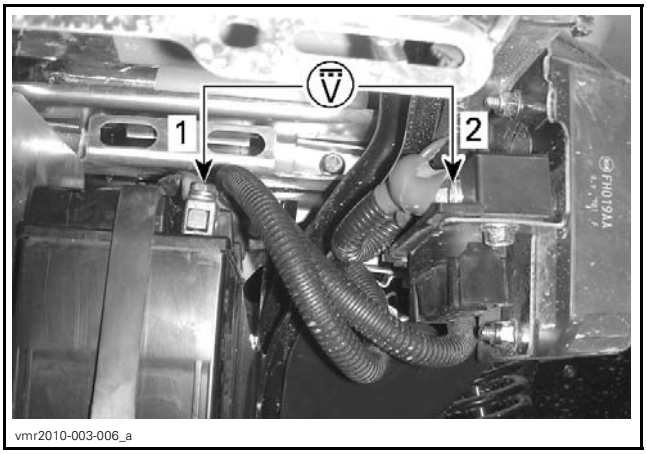

1. Negative (-) battery terminal
2. Rear fuse box battery terminal

3. Measure the battery voltage.

NOTE: If battery voltage is low, recharge battery.

4. Ensure the vehicle transmission is set to PARK.
5. Start the engine.
6. Note the voltage on the multimeter with the engine running (charging system voltage).
7. Press the RANGE button repeatedly to select Manual Range 6 0.

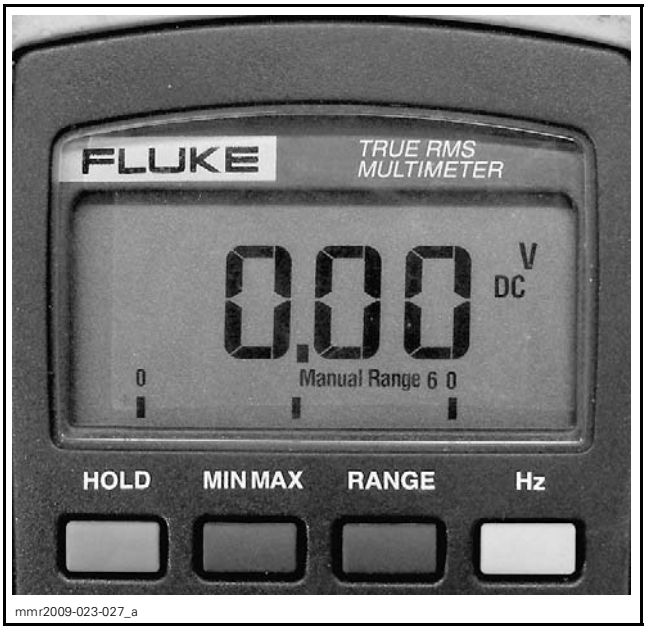

VDC SELECTED TO MANUAL RANGE 6 0

8. Press the MIN MAX button on the multimeter to engage the MIN function.

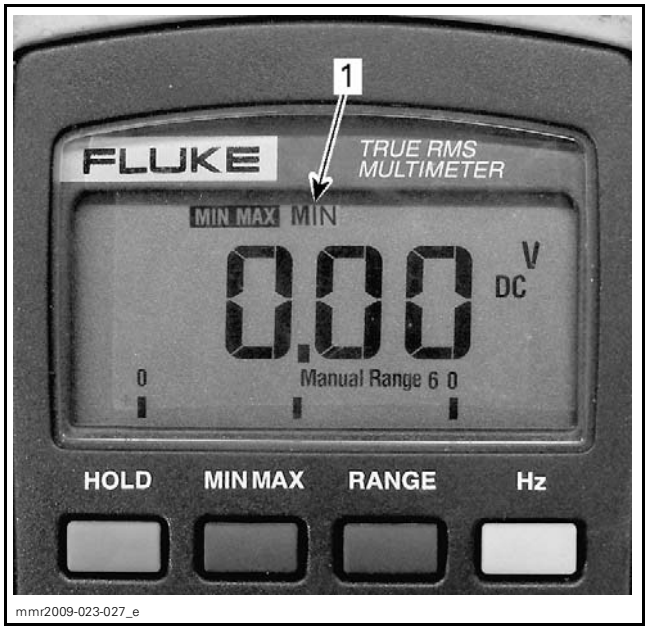

1. MIN function selected

9. Turn the handlebar **momentarily** against the steering frame stops to each side.

NOTE: Do not hold steering against frame stops for and extended period of time.

10. Read the MIN charging system voltage recorded while the handlebar was turned against each stop.

DPS SYSTEM LOAD TEST			
PROBE POSITIONS		STEERING POSITION	VOLTAGE READING
Battery (-) terminal	Rear fuse box battery terminal	LH stop	At least 12 Vdc
		RH stop	

NOTE: Turning the handlebar momentarily against the frame stops generates maximum DPS load (maximum current draw on electrical system). Electrical system must sustain at least 12 Vdc for proper DPS operation.

www.midwestmanuals.com

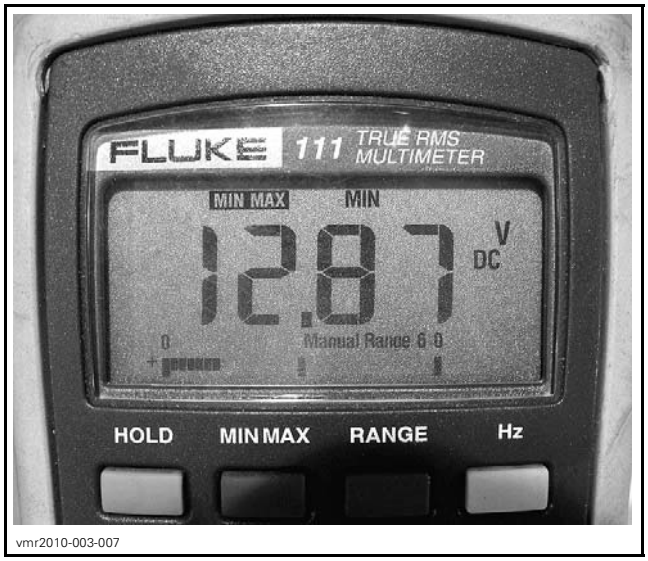

vmr2010-003-007

If the electrical system cannot sustain at least 12 Vdc, check the following:

– Battery
– Battery connections
– DPS unit power and ground connections
– Charging system
– Frame and engine ground studs.

If the previously listed items, carry out the following *DPS UNIT CURRENT TEST*.

DPS Unit Current Test

1. Connect vehicle to the latest B.U.D.S. software.
2. Click on the **Read Data** button.
3. Choose the **Monitoring** page tab.
4. At the bottom of the **Monitoring** page, choose the **DPS** tab.

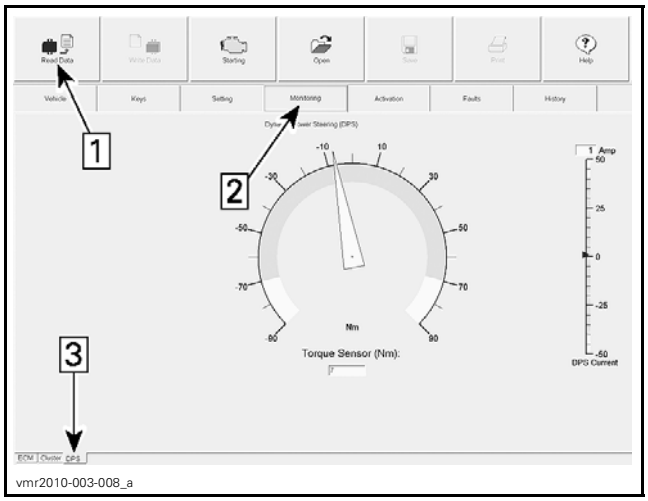

vmr2010-003-008_a

Step 1: Press Data button
Step 2: Select Monitoring page tab
Step 3: Select DPS tab

5. With the vehicle engine running in PARK, turn the handlebar side to side, momentarily against each stop and observe the indications on the B.U.D.S. DPS **Monitoring** page.

The DPS **Torque Sensor Nm** increase with torque applied to handlebar.

The **DPS Current** ammeter should increase proportionately to the torque applied, and decrease with the torque as steering assist is provided.

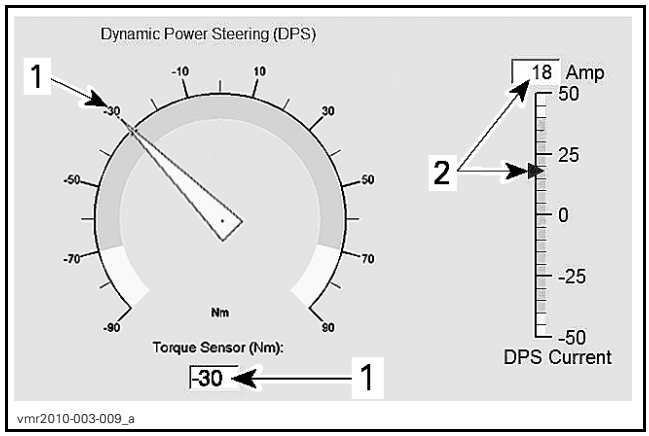

vmr2010-003-009_a

TYPICAL - LH TURN
1. Torque sensor indication (negative)
2. DPS current indication (positive)

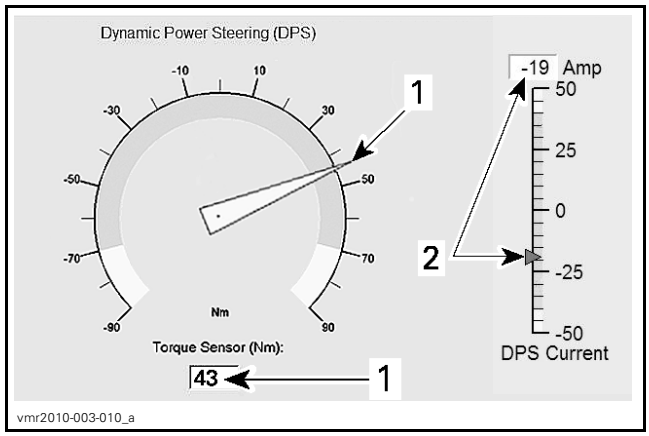

vmr2010-003-010_a

TYPICAL - RH TURN
1. Torque sensor indication (positive)
2. DPS current indication (negative)

NOTE: Increase and decrease in torque and current readings is very brief as steering assist is quickly provided. Current draw should remain within green scale but may momentarily peak to 60 amps, then drop off close to 0 amps as torque applied is nulled out by steering assist. A residual torque of 2 N•m (18 lbf•**in**) with a corresponding current draw is acceptable.

If current draw tends to remain high, carry out the following:

– Steering alignment check.

www.midwestmanuals.com

– Steering column shim adjustment at half bushings as described in the *DPS UNIT INSTALLATION* procedure detailed in this section.
– *TORQUE OFFSET RESET* procedure detailed in this section.
– Replace DPS unit.

DPS Unit Removal

1. Remove the following items:
   – Seat
   – Center panel
   – LH and RH side panels
   – LH and RH inner fender panels.
2. Lift up on the dash board (gauge support) and disconnect the following:
   – Gauge
   – Ignition switch
   – 12 Vdc power outlet.
3. Remove dash board from vehicle.
4. Remove the screw securing the shift lever guide plate to the engine air filter housing.

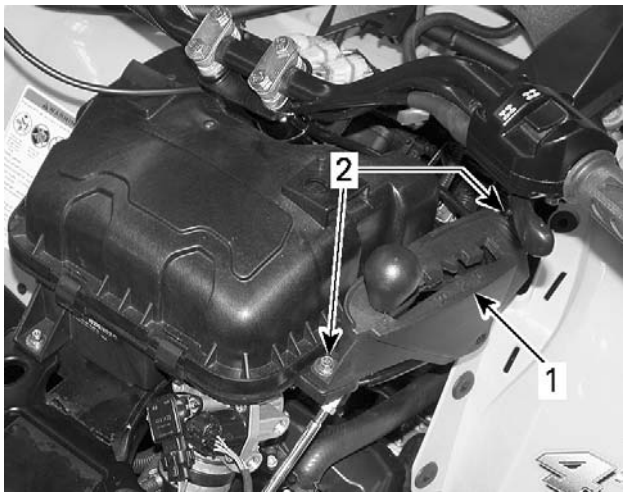

TYPICAL
1. Shift lever guide plate
2. Guide plate screws (forward screw not visible)

NOTE: It is not necessary to disconnect the shift lever.

5. Loosen the gear clamp securing the air filter housing duct to the throttle body.

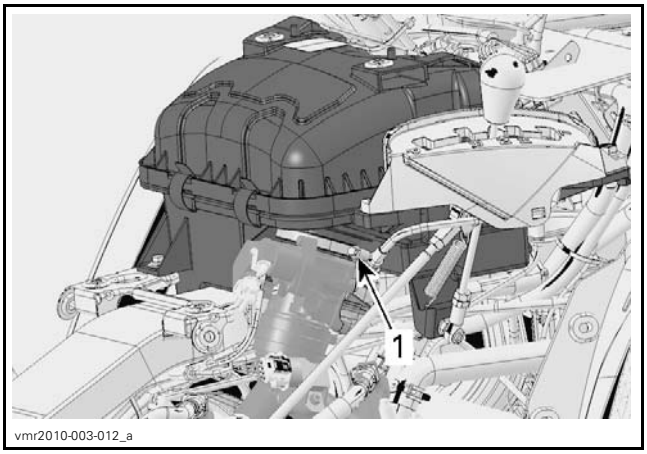

1. Gear clamp to loosen

6. Remove the screws securing the engine air filter housing.
7. Move the shift lever and guide plate slightly to the right.
8. Lift up on the air filter housing to release it from the throttle body and move the filter housing towards the RH side of the vehicle.

NOTE: Moving the air filter housing to the right provides access required for CVT air inlet duct removal.

9. Remove the CVT air inlet duct assembly.

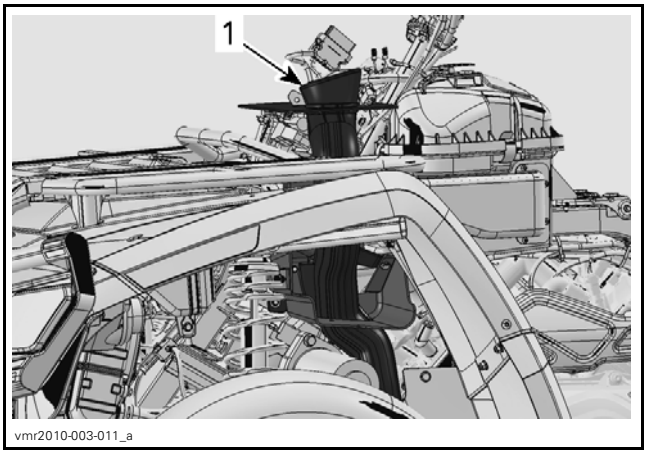

1. CVT air inlet duct

10. Remove the ECM from it's support bracket.
11. Disconnect the 3 electrical connectors from the DPS unit.

www.midwestmanuals.com

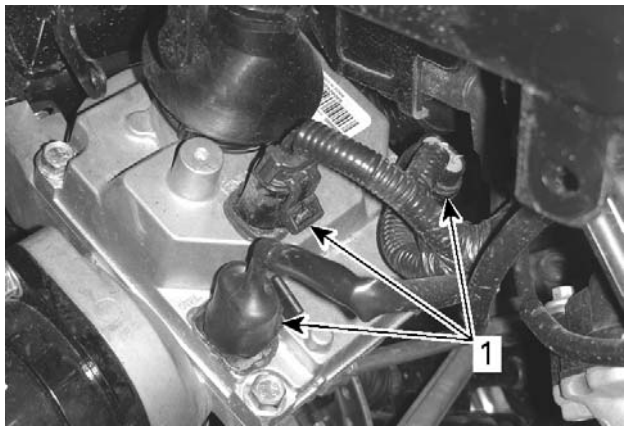

1. DPS connectors (3x)

12. Cut the locking tie securing the bellows at the bottom of steering column near the DPS unit, and pull the bellows upwards sufficiently to access the steering column pinch bolt.

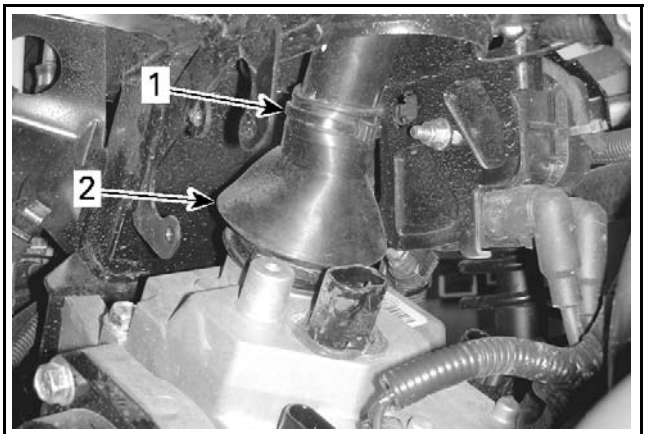

1. Cut this locking tie
2. Steering column bellows

13. Remove the steering column pinch bolt and retaining nut. Discard the retaining nut.

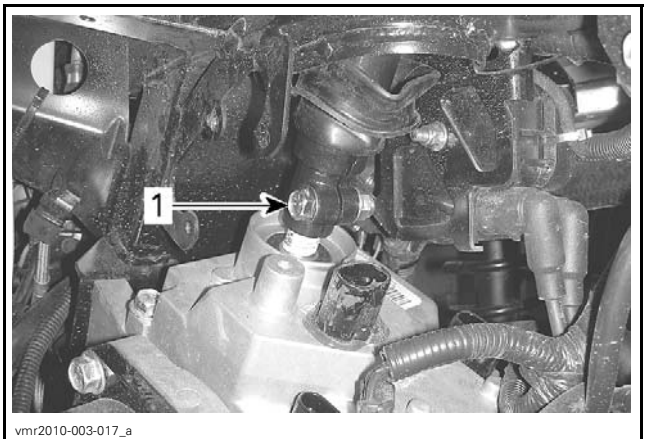

1. Steering column pinch bolt

14. Remove and discard the elastic nuts from the 2 hexagonal screws that secure steering column half bushings to the support on the frame.

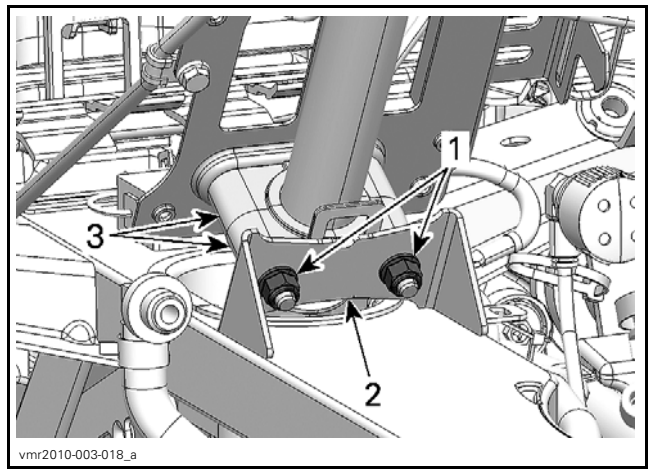

1. Elastic nuts to remove and discard
2. Frame support
3. Steering column half bushings

15. Remove the 2 hexagonal screws from the ECM support.

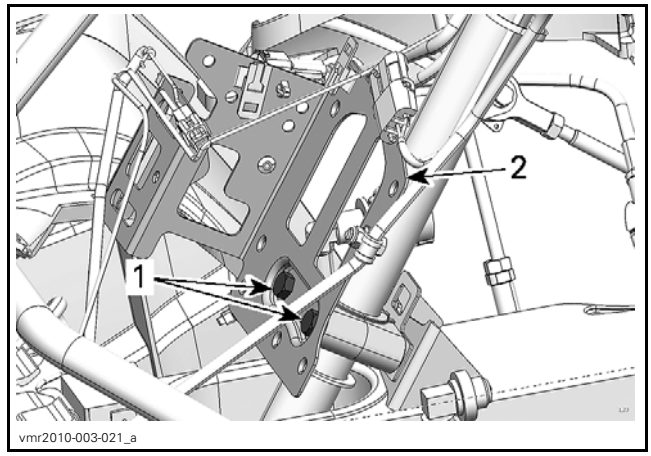

1. Hexagonal screws to remove
2. ECM support

16. Remove and save the shim(s) from between the rear half bushing and the steering support on the frame.

www.midwestmanuals.com

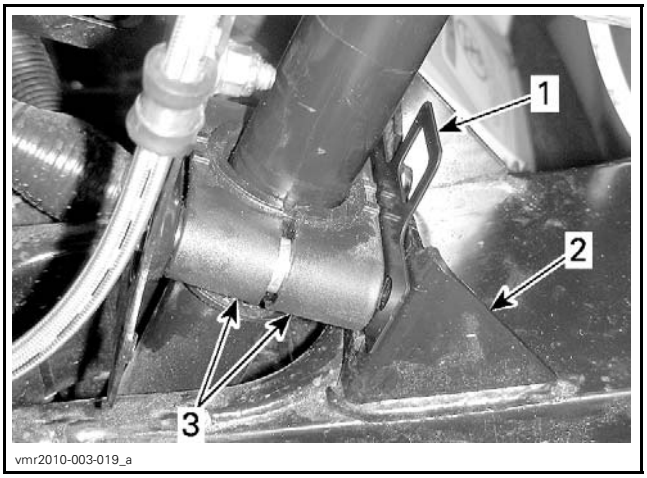

1. Shim
2. Steering column frame support
3. Half bushings

17. Pull up on the steering column to disengage it from the DPS unit and move it to the side.

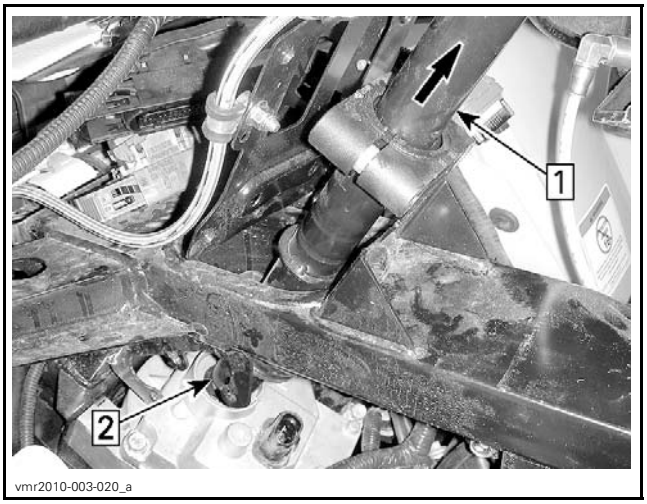

Step 1: Pull up on steering column
Step 2: Disengage column from DPS unit

18. Remove the hardware that secures both tie-rod ends to the pitman arm (steering lever). Discard cotter pins.

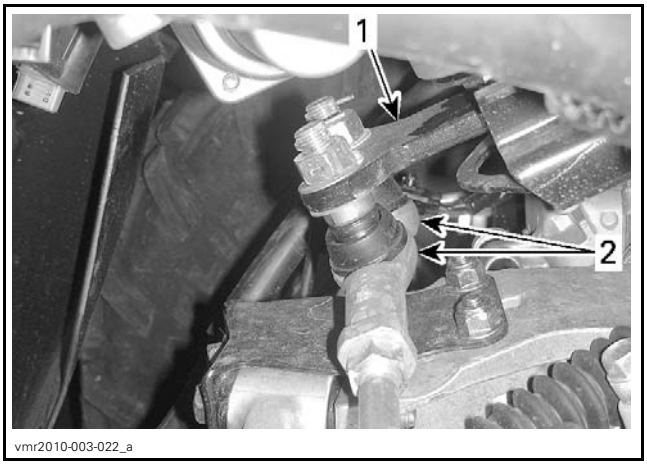

1. Pitman arm
2. Tie rod ends

NOTE: Leave the tie rod ends on the pitman arm at this time. They will come off easily when the DPS unit is lifted from its frame support.

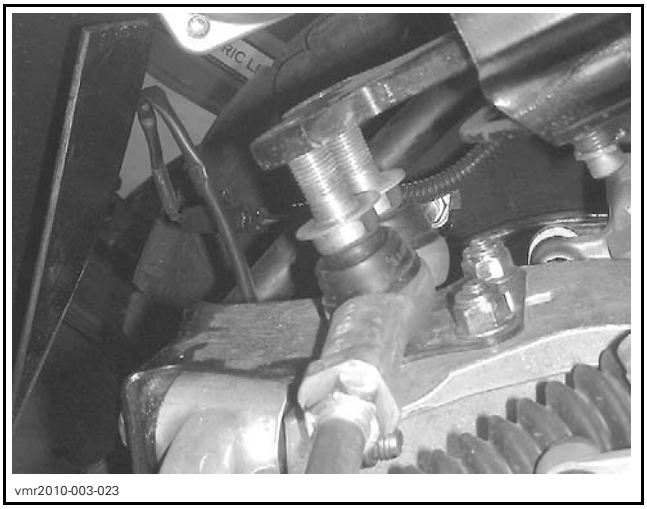

TIE ROD ENDS (HARDWARE REMOVED)

19. Remove the 4 hexagonal flanged screws securing DPS unit to frame.

NOTE: Discard the 4 conical spring washers on the DPS retaining screws. Do not remove the 2 small hexagonal forming screws from the DPS unit unless it is being replaced.

www.midwestmanuals.com

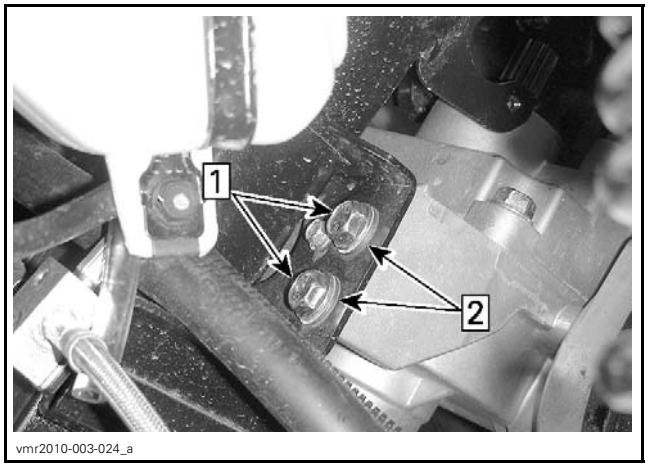

TYPICAL - LEFT SIDE ILLUSTRATED
Step 1: Remove DPS retaining screws (2 each side)
Step 2: Discard conical washers under screw head

20. Pull up on DPS unit to align the 2 small hexagonal forming screws with the extraction holes in the DPS mounting bracket, then remove the DPS unit from the bracket.

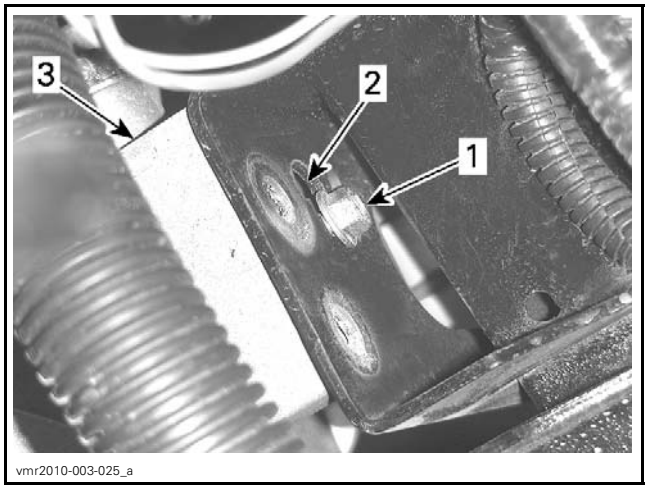

TYPICAL - RIGHT SIDE ILLUSTRATED
1. Hexagonal forming screws (1 each side)
2. Extraction holes
3. DPS unit

NOTE: As you pull the DPS unit from the frame support, the 2 tie rod ends should release from the pitman arm. Be careful not to loose the hardened steel washers on the tie rod ends.

DPS Unit Installation

NOTICE **The following procedure MUST be followed as specified. Failure to do so may result in steering column/DPS misalignment and poor DPS operation due to an induced erroneous torque on the DPS shaft.**

1. If installing a new DPS unit, install the two M5 hexagonal forming screws on the mounting flange of the DPS unit.

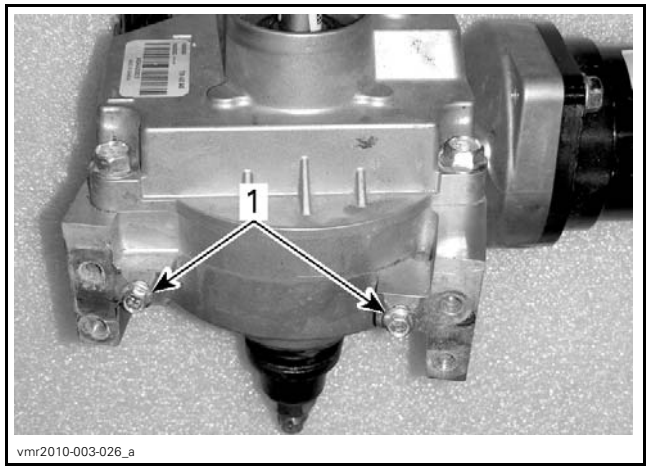

1. Hexagonal forming screws

2. Position the DPS unit on the frame DPS mounting bracket by engaging the two hexagonal forming screws in the slots provided in the bracket.

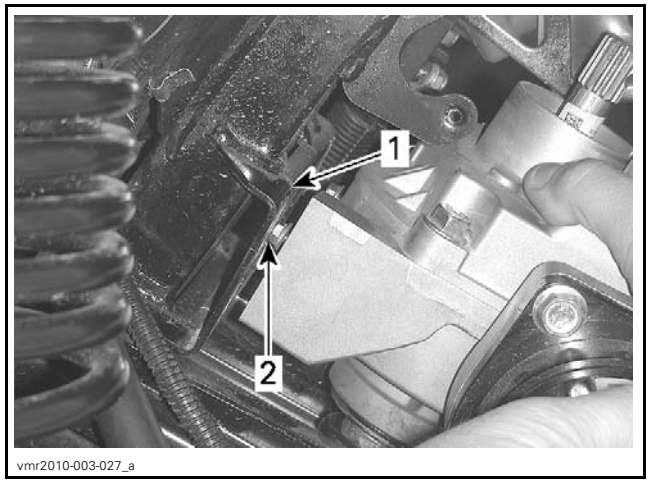

1. DPS mounting bracket
2. Engage hexagonal forming screw on DPS unit here

3. Engage the 2 tie rod ends in the pitman arm as you lower the DPS unit on it's mounting bracket.

NOTE: **Ensure** both tie rod ends has a hardened steel washer on it.

www.midwestmanuals.com

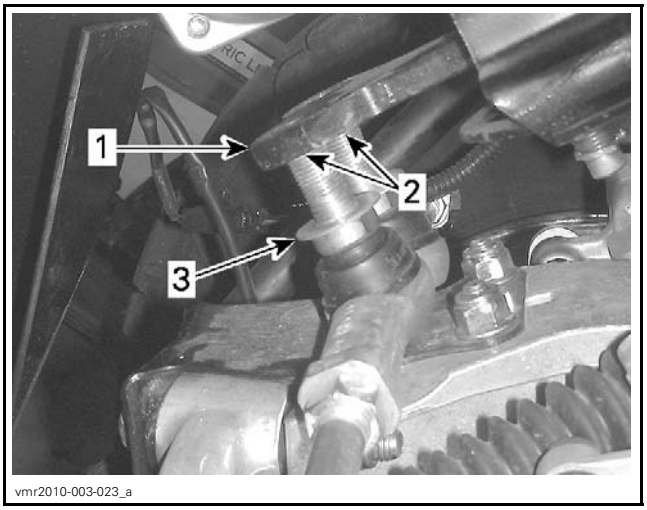

1. Pitman arm
2. Tie rod ends inserted in pitman arm
3. Hardened steel washer on tie rod end

4. Engage NEW M8 hexagonal flanged screws through the DPS frame support and into the DPS unit.

NOTE: **Ensure** each retaining screw has a NEW conical spring washer between the screw head and the DPS frame support. **Do not** tighten the retaining screws more than half thread length at this time.

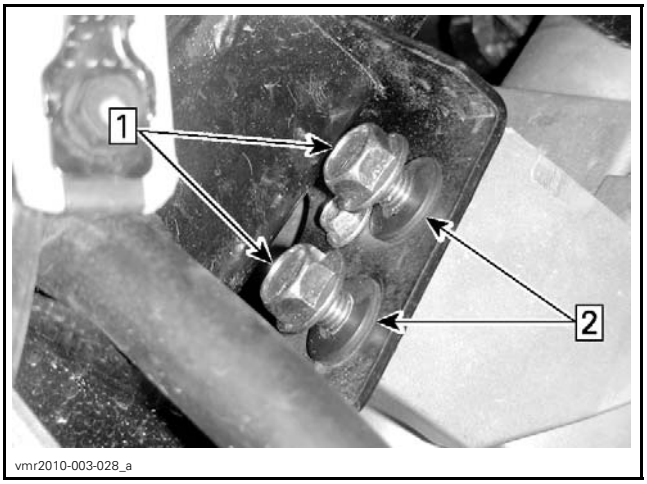

TYPICAL - RH SIDE ILLUSTRATED
Step 1: Engage NEW DPS mounting screws (2 each side)
Step 2: Install NEW conical washers

5. Remove the two half bushings from the steering column and ensure the two O-ring seals are installed on the shaft and in good condition. Replace as required.

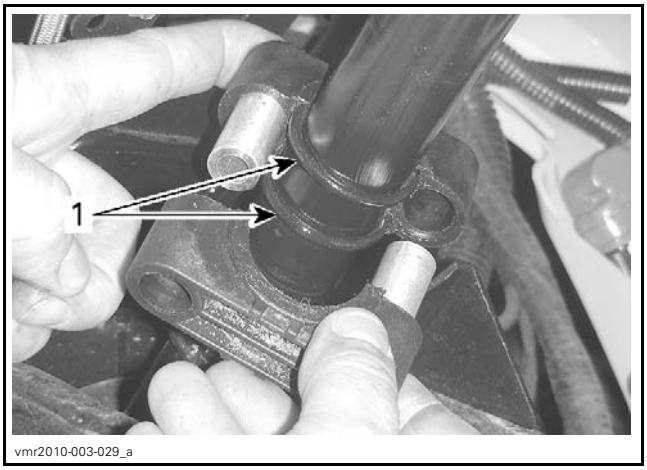

1. O-ring seals on steering column

6. Index steering column splines with DPS unit splines.

NOTE: The DPS shaft splines have a key which must be aligned with the keyway in the steering column end.



STEERING COLUMN INDEXED TO DPS SHAFT SPLINES

7. Fully insert steering column end onto DPS shaft splines. If necessary, place a rag on steering cover and gently tap on it with a plastic hammer.

NOTICE **The following steps MUST be followed as specified. Failure to do so may result in steering column/DPS misalignment and poor DPS operation due to an induced erroneous torque on the DPS shaft.**

8. Install steering column pinch bolt and a NEW elastic nut. Torque nut to 24 N•m (18 lbf•ft).

www.midwestmanuals.com

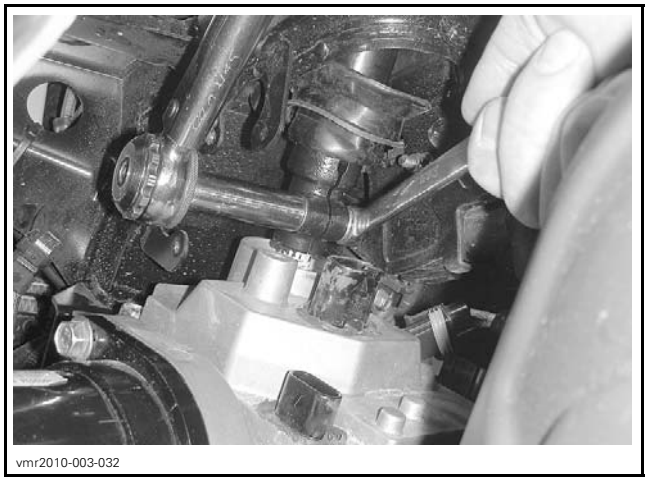
vmr2010-003-032

Pull bellows down over steering column bolt and edge of DPS unit housing extension. Secure bellows using the appropriate locking tie.

NOTE: Ensure the locking tie is on the tube part of the steering column, **not** on the forged end. Bellows should cover end of ring flange on DPS unit but **not** cover the drainage hole at the bottom of the ring flange. **Do not** install a locking tie on the DPS end of the bellows. Lower portion of bellows **MUST** remain floating over the DPS housing.

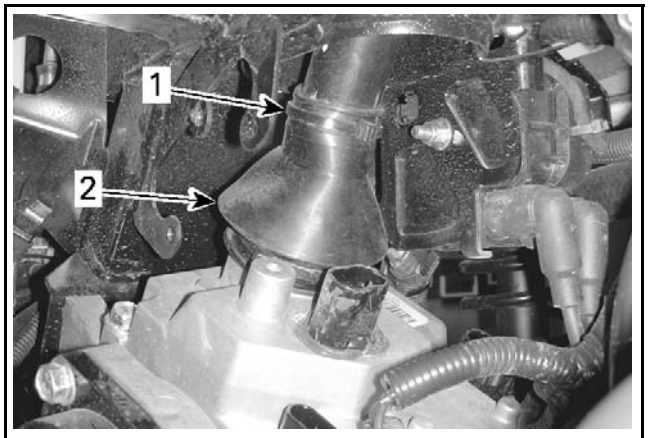

vmr2010-003-016_a

1. Locking tie location
2. Steering column bellows

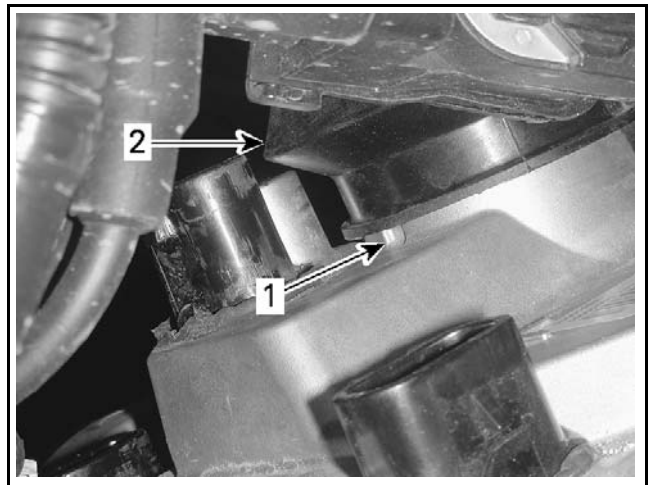

vmr2010-003-033_a

1. Drainage hole in DPS ring flange
2. Steering column bellows

9. Apply XPS SYNTHETIC GREASE (P/N 293 550 010) to the inside of both steering column half bushings.

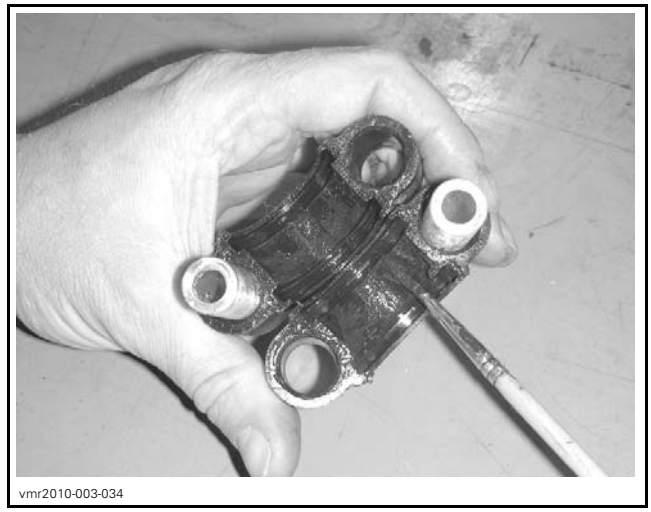
vmr2010-003-034

10. Loosely secure the steering column to its frame support by installing the following parts to provide side to side alignment of steering column.
    - Half bushings (x2)
    - Metal sleeves between bushings (x2)
    - O-ring seals (x2)
    - M8 hexagonal screws (x2)
    - M8 elastic nuts (x2).

NOTE: **Do not** install shims and **do not** torque the fasteners at this time. Hand tighten only. Steering column **must not** be drawn in towards the column support.

www.midwestmanuals.com

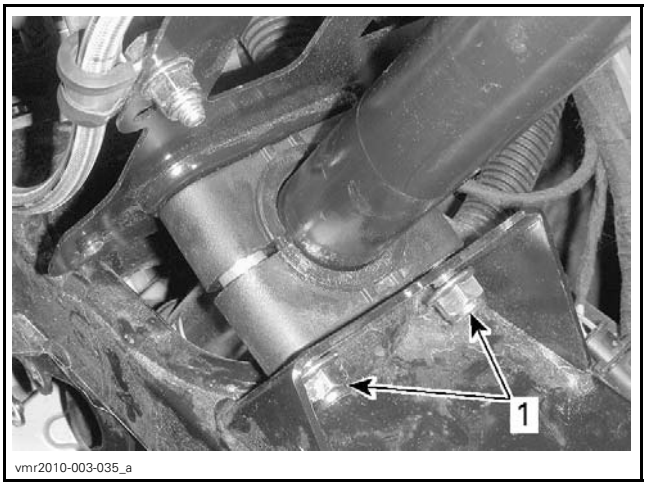

1. These nuts installed hand tight at this time

11. Torque DPS unit mounting screws to 24.5 N•m (18 lbf•ft).

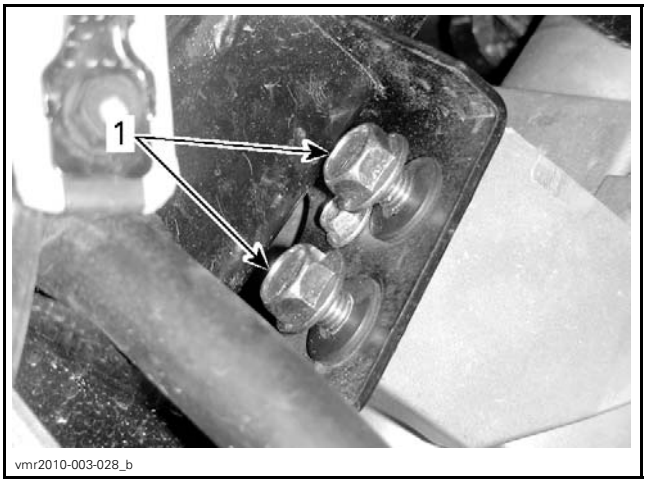

TYPICAL - RH SIDE ILLUSTRATED
1. Torque DPS mounting screws (x4)

12. Using an 8 mm (5/16 ft) telescoping gauge as found in the SNAP-ON® TELESCOPING GAUGE SET (P/N LST 52616), measure the distance between the steering column shaft and the face of the column frame support. Measurement is taken above rear half bushing.



STEERING COLUMN SHIM MEASUREMENT

NOTE: Ensure the forward end of the tool is in the center of the steering column, and the rearward end does not protrude through the notch in the support.

13. Measure the telescoping gauge using a Vernier caliper (or a micrometer) and compare the measured distance to the following table to establish the required shim thickness

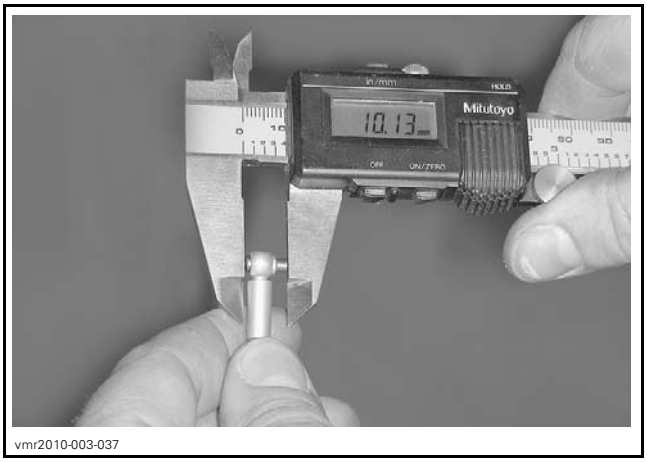

STEERING COLUMN SHIM REQUIREMENT	
MEASURED DISTANCE	TOTAL SHIM THICKNESS REQUIRED
8.63 mm (.34 in)	None
9.63 mm (.379 in)	1 mm (.039 in)
10.65 mm (.419 in)	2 mm (.079 in)
11.66 mm (.459 in)	3 mm (.118 in)
12.65 mm (.498 in)	4 mm (.157 in)

NOTE: Shims come in 1 mm (.039 in) and 2 mm (.079 in) thicknesses. Total shim thickness **must not exceed** 4 mm (.157 in).

www.midwestmanuals.com

If total shim thickness exceeds 4 mm (.157 in), carry out the following:

– Re-measure the distance between steering column and support. Ensure the forward end of the tool is in the center of the steering column, and the rearward end does not protrude through the notch in the support.
– Check steering column support and frame to ensure they are not bent, twisted or damaged in any way.
– Check machined flat mounting surface on new DPS.
– Compare old and new DPS units.
– Ensure the 4 DPS mounting screws and the steering column pinch bolt are properly torqued.

14. Insert appropriate shim(s) between the rear half bushing and the steering column support.

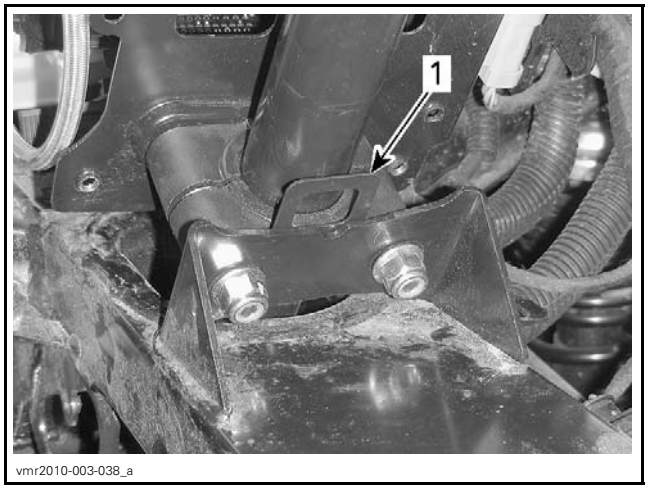

1. Insert required shim(s) here

15. As you hold each elastic nut with a wrench, torque the hexagonal **SCREWS** retaining the steering column to 38 N•m (28 lbf•ft).

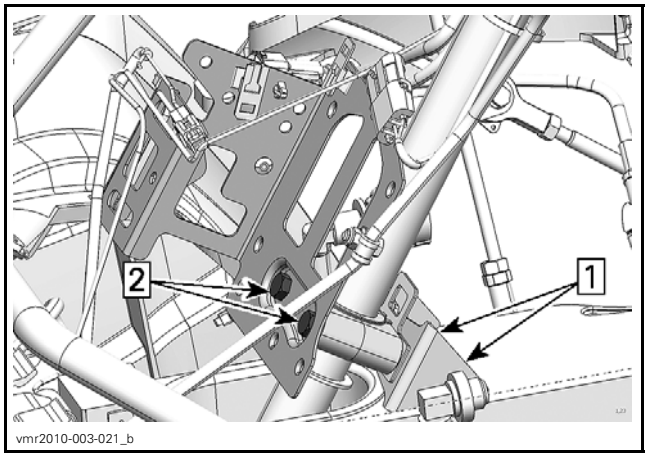

Step 1: Hold elastic nuts with wrench (not illustrated)
Step 2: Apply specified torque to hexagonal screws

NOTE: If torque is applied to elastic nuts instead of hexagonal screw head, use 24.5 N•m (18 lbf•ft).

16. Install hardware on LH and RH tie rods on pitman arm. Follow parts assembly sequence as in following illustration.
17. Torque tie rod end retaining nuts to 72 N•m (53 lbf•ft).

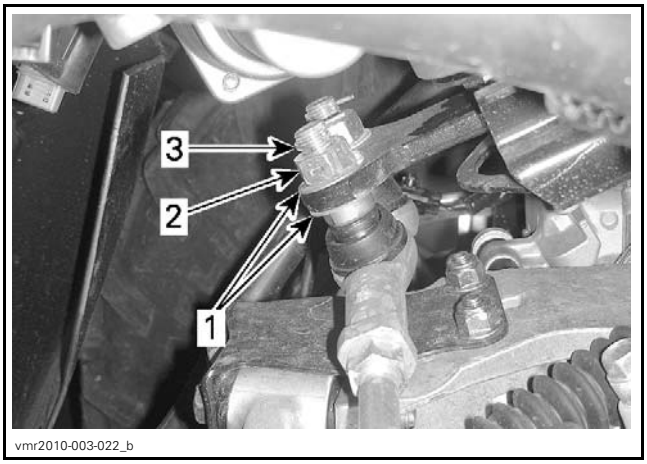

1. Hardened steel washers (one each side of pitman arm)
2. Tie rod end retaining nut (torque applied)
3. NEW cotter pin installed

18. Turn handlebar fully to each side and check for proper contact between pitman arm and pitman arm frame stops (both sides).

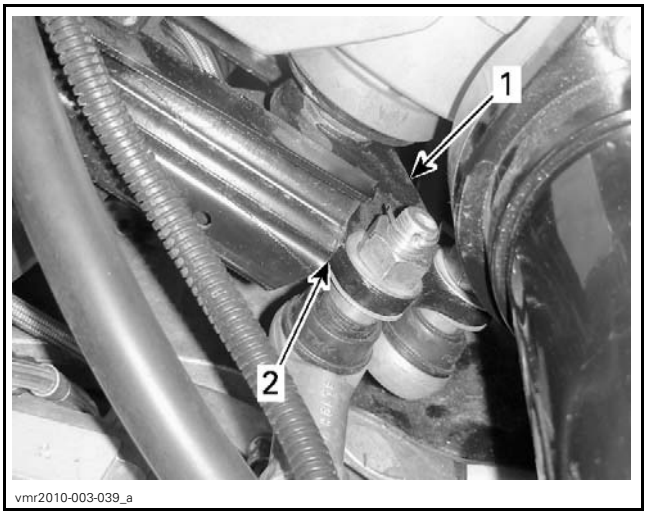

TYPICAL - LH ILLUSTRATED
1. Pitman arm
2. Contact point with frame stop

NOTE: Contact between pitman arm and pitman arm stops must be checked with vehicle weight on wheels.

19. Perform a *STEERING ALIGNMENT* as described in the applicable Shop Manual subsection.

www.midwestmanuals.com

20. Install and connect ECM. Torque ECM mounting screws to 7 N•m (62 lbf•**in**).
21. Install dash board and reconnect the following:
    – Multifunction gauge
    – Ignition switch
    – 12 Vdc accessories outlet.
22. If installing a replacement DPS unit, refer to *DPS REPLACEMENT* in this subsection.
23. Perform the torque offset reset. Refer to *TORQUE OFFSET RESET* in this subsection.
24. Install all other removed parts in the reverse order of removal.
25. Carry out a test ride of the ATV to ensure proper operation of the DPS unit.

DPS Unit Replacement

New DPS units **do not** come with the required software programmed into the unit. A DPS unit fault will be generated when the vehicle is powered up. The check engine light will come on and a DPS FAULT message will appear in the multifunction gauge.

When DPS unit installation is complete, carry out the following steps.

1. Connect the ATV to the latest B.U.D.S. software.
2. Select the **Read Data** button.
3. In the **Module** menu, choose the **DPS** submenu and install the latest DPS software **Update** file as applicable to the type ATV (Outlander or Renegade).

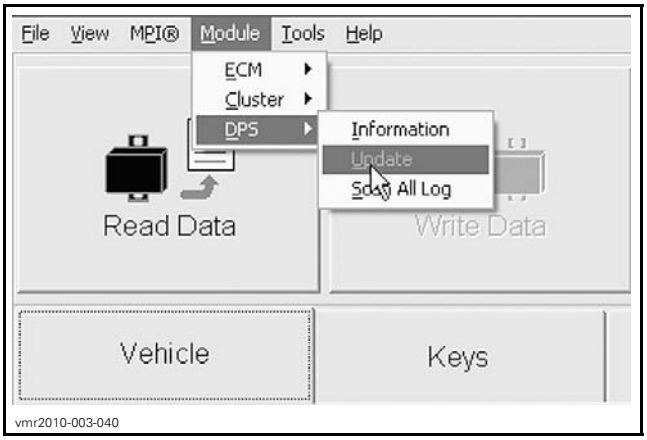

DPS SOFTWARE UPDATE

4. Once the correct DPS software file is installed, go to the **Faults** page and clear the fault codes.
5. Carry out the *TORQUE OFFSET RESET* procedure as described in this subsection.
6. Test drive the ATV to ensure proper DPS operation.

PITMAN ARM

If the pitman arm requires replacement, the DPS unit **MUST** be replaced.

⚠ WARNING

DO NOT attempt to replace or repair the pitman arm. Do not use a torch or arc welder on the pitman arm. Failure to comply will result in DPS unit malfunction.

www.midwestmanuals.com

AIR CONTROLLED SUSPENSION (ACS)

SERVICE TOOLS

Description	Part Number	Page
FLUKE 115 MULTIMETER	529 035 868	32, 35, 37–38, 43–44
OETIKER PLIERS	295 000 070	44
SPRING REMOVER	529 036 007	46

SERVICE PRODUCTS

Description	Part Number	Page
LOCTITE 592 (PIPE SEALANT)	293 800 018	33–34, 41, 47

Midwest Manuals
sales@midwestmanuals.com
www.midwestmanuals.com

www.midwestmanuals.com

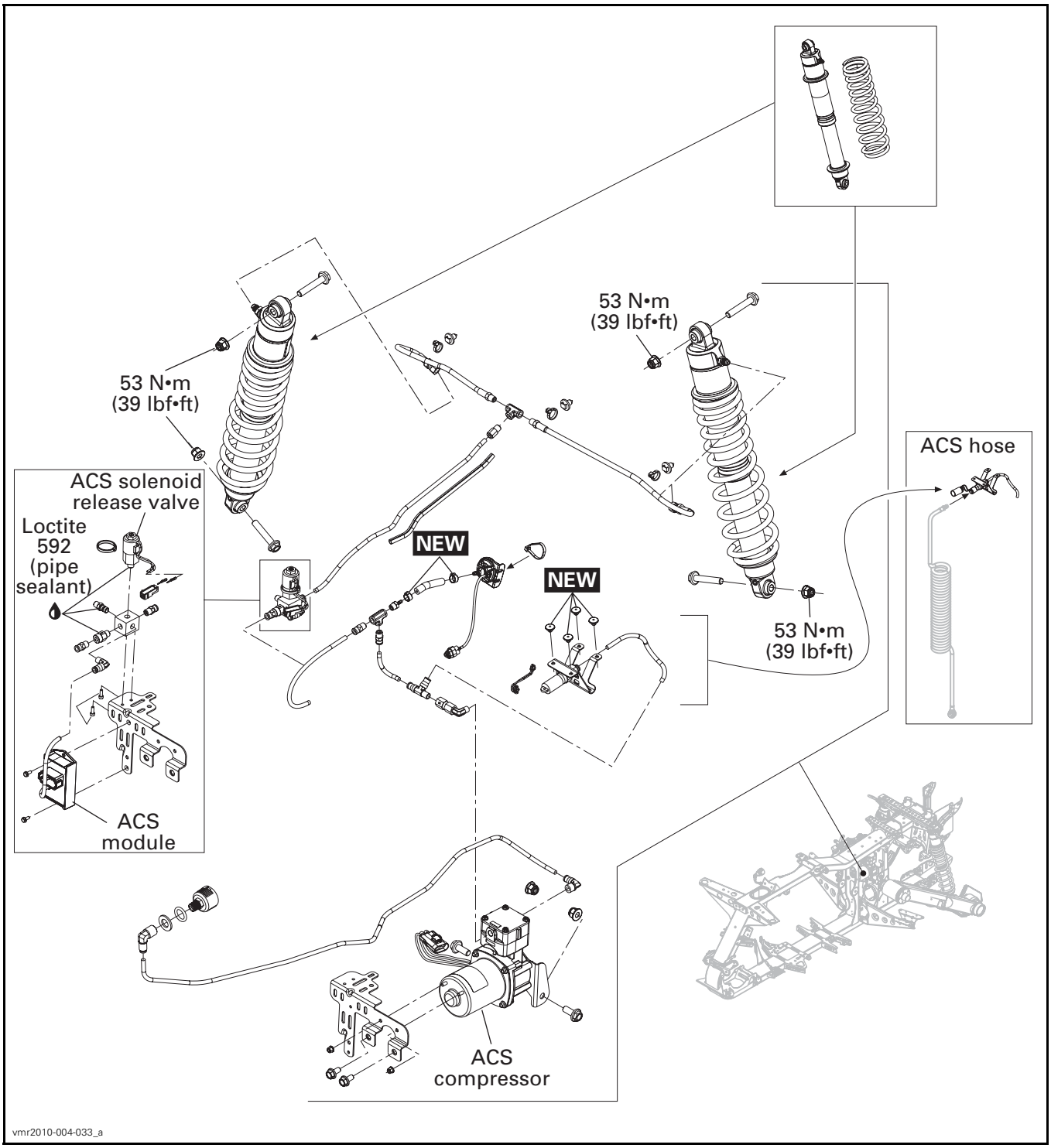

www.midwestmanuals.com

GENERAL

During assembly/installation, use torque values and service products as in the exploded views.

⚠ WARNING

Torque wrench tightening specifications must be strictly adhered to.
Locking devices (e.g.: locking tabs, cotter pins, etc.) must replaced with new ones.

Hoses, cables or locking ties removed during a procedure must be reinstalled as per factory standards. Hoses must be properly inserted.

Be careful while manipulating nylon hoses, they must not be kinked.

⚠ CAUTION Always wear safety goggles when working with pressurized air system.

⚠ CAUTION The ACS suspension system may be under high pressure (up to 6 bar (85 PSI)). Release air pressure prior to working on the system. Refer to *RELEASING AIR PRESSURE IN SYSTEM FOR SERVICING*.

SYSTEM DESCRIPTION (FEATURES)

The ACS suspension automatically keeps air pressure constant with changing rider weights or loads applied. The system can be adjusted on the fly to suit rider's preferences.

The multifunction gauge indicates suspension setting as follows.

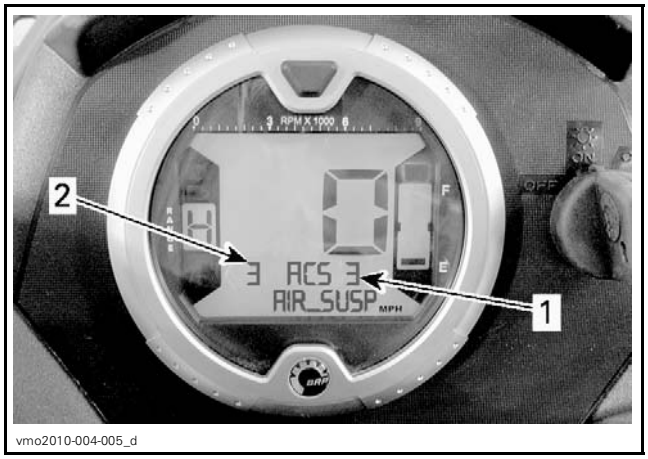

vmo2010-004-005_d

1. Requested setting (set point)
2. Actual setting (pressure transducer reading)

Refer to the following table to know the ACS pressure related to multifunction gauge setting.

ACS SUSPENSION SETTINGS			
SETTING	PRESSURE	RIDING COMFORT	RECOMMENDED LOAD
ACS 1	0.5 bar (8 PSI)	Softest	Operator only
ACS 2	1 bar (15 PSI)	Soft	
ACS 3	2 bar (30 PSI)	Semi-soft	Transporting a passenger OR a cargo
ACS 4	4 bar (55 PSI)	Semi-firm	
ACS 5	5 bar (70 PSI)	Firm	Transporting a passenger AND a cargo
ACS 6	6 bar (85 PSI)	Firmest	

Changing ACS Setting

To change the ACS setting proceed as follows:

– Press selector button several times until *AIR_SUSP* is displayed.
– Press and release **ACS** button until the requested setting is displayed.

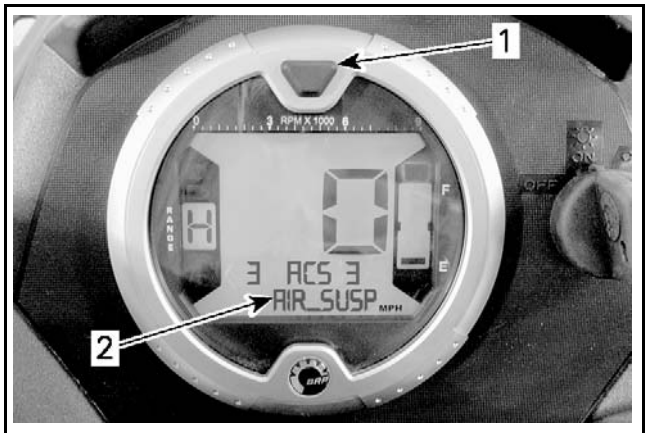

vmo2010-004-005_a

1. Selector button
2. AIR_SUSP displayed



vmo2010-004-006_a

TYPICAL
1. ACS button

www.midwestmanuals.com

The requested setting is controlled by the ACS electronic module. The module is equipped with a pressure transducer to keep air pressure constant in the system. Depending on the rider adjustment, the module will increase pressure using the compressor or release pressure using the solenoid release valve.

ACS Setting Acknowledgement

If ACS suspension was set to *ACS 5* or *ACS 6* before shutting down the vehicle, the multifunction gauge will scroll an acknowledgement message at startup.

To acknowledge the ACS suspension setting, press and release **ACS** button while message appears.



vmo2010-004-006_a

TYPICAL
1. ACS button

NOTE: If the message is not acknowledged, the suspension will automatically return to setting *ACS 3*.

NOTE: If the selector button in the multifunction gauge is pressed while the acknowledgement message appears, the suspension will directly return to setting *ACS 3*.

NOTE: If the vehicle transmission is set to REVERSE position at startup, the override message will be displayed instead of acknowledgement message.

Using the Auxiliary Line to Inflate Tires

The ACS system is equipped with an auxiliary line specially designed to inflate tires. The air pressure in this auxiliary line is controlled by a second pressure transducer connected to the ACS module.

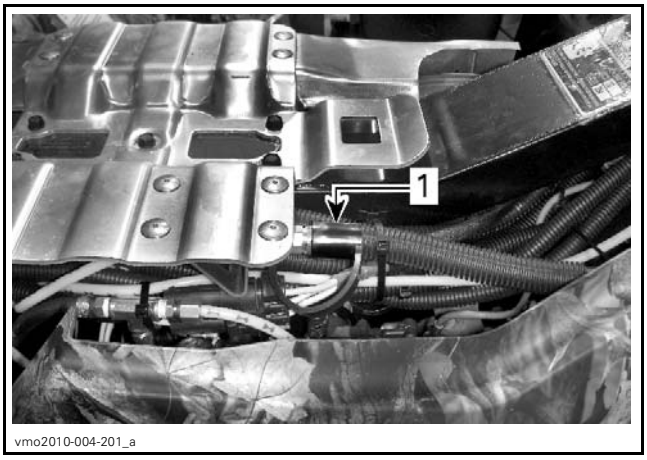

vmo2010-004-201_a

1. Auxiliary line adaptor to inflate tire

To ensure that the use of the auxiliary line will not change the pressure setting inside shock absorber, the system has been divided in two zones using check valves. With this layout, both pressure zones are independent to eliminate any air pressure variation.

NOTE: The auxiliary line output pressure will vary according to the ACS suspension setting. The *ACS 1* adjustment will provide less pressure than the *ACS 6* adjustment.

NOTICE **Never inflate tires above the recommended pressure.**

ACS SYSTEM		
ZONE	LINK WITH	PRESSURE TRANSDUCER LOCATION
High-pressure zone	Shock absorbers	Inside ACS module
Low-pressure zone	Auxiliary line	In line between solenoid release valve and compressor

Releasing Air Pressure in System for Servicing

It is recommended to release air pressure in the system before servicing any components.

1. Remove seats.
2. Remove RH side panel.
3. Unscrew pneumatic valve cap.

www.midwestmanuals.com

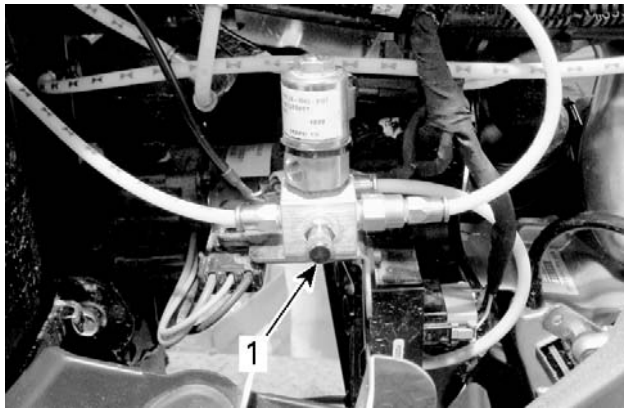

1. Pneumatic valve cap

4. Push and hold pneumatic valve pin using a small screwdriver.

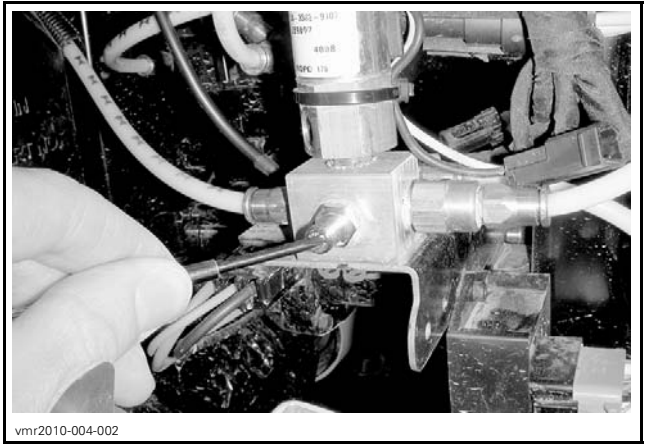

5. Wait until the system is completely empty of air.

NOTE: Make sure to wait enough time in order to let the system expel the air. (no more pressurized air sound from the valve).

6. Reinstall pneumatic valve cap.

SYSTEM DESCRIPTION (COMPONENTS)

Fuse and Relay

ACS Fuse (F14)

1. ACS fuse (F14) is located in the front fuse box.

FRONT FUSES BOX		
NO	DESCRIPTION	RATING
F14	ACS	20 A

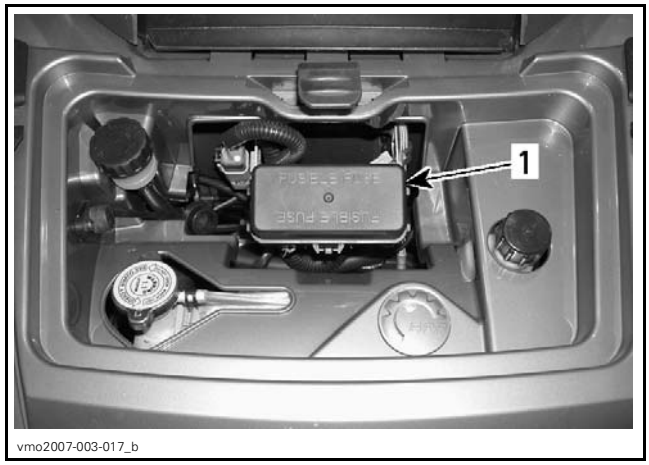

TYPICAL - FRONT SERVICE COMPARTMENT
1. Front fuse box

ACS Compressor Relay (R5)

Compressor relay is located in the front fuse box, under front service compartment panel. Note that the relay is not at the same position on a 500 LTD and on a 800R LTD models. Refer to the following table.

RELAY (R5) TERMINAL	FRONT FUSE BOX PIN	
	500 LTD	800R LTD
86	6D	11B
85	7C	12A
30	7D	12B
87	6C	11A

Outlander 500 LTD

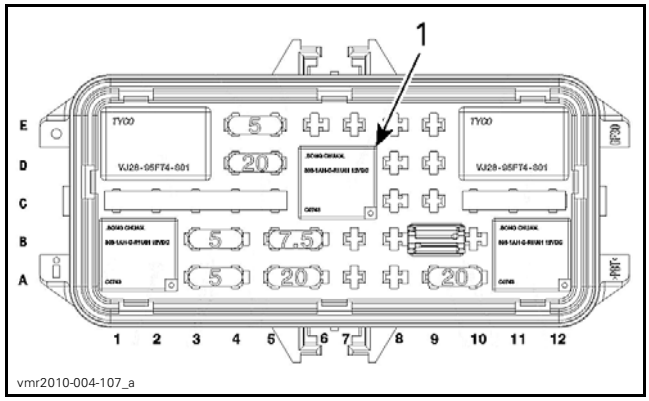

OUTLANDER 500 LTD MODEL
1. ACS compressor relay (R5)

www.midwestmanuals.com

Outlander 800R LTD

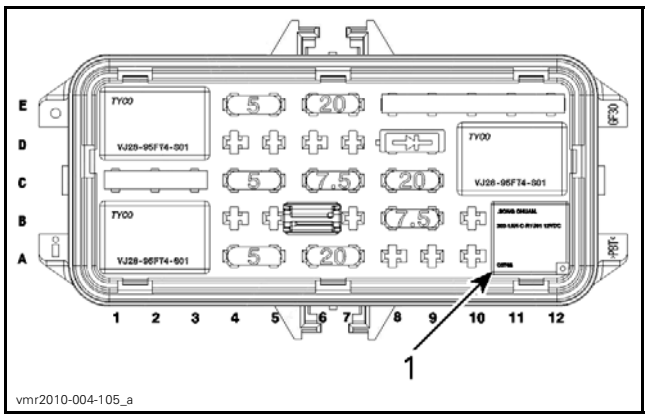

OUTLANDER 800R LTD MODEL
1. ACS compr



www.midwestmanuals.com

ACS Main Components

ACS COMPONENTS	MAIN FUNCTION
Filter	To filter air intake of the compressor
Compressor	To pressurize the system
Solenoid release valve	To release air in the system
Electronic module	To control the compressor or the solenoid release valve
Manifold	To split the air hoses and allows to manually release air in the system
Pressure transducer (Low-pressure zone)	To monitor the air pressure of the auxiliary line
Pressure transducer (High-pressure zone)	To monitor the air pressure of the shock absorbers
Check valve (compressor)	To protect the compressor
Check valve (between both zones)	To eliminate air pressure variation between low and high pressure zone
Auxiliary line	To inflate tire
Cluster	To monitor the air pressure setting

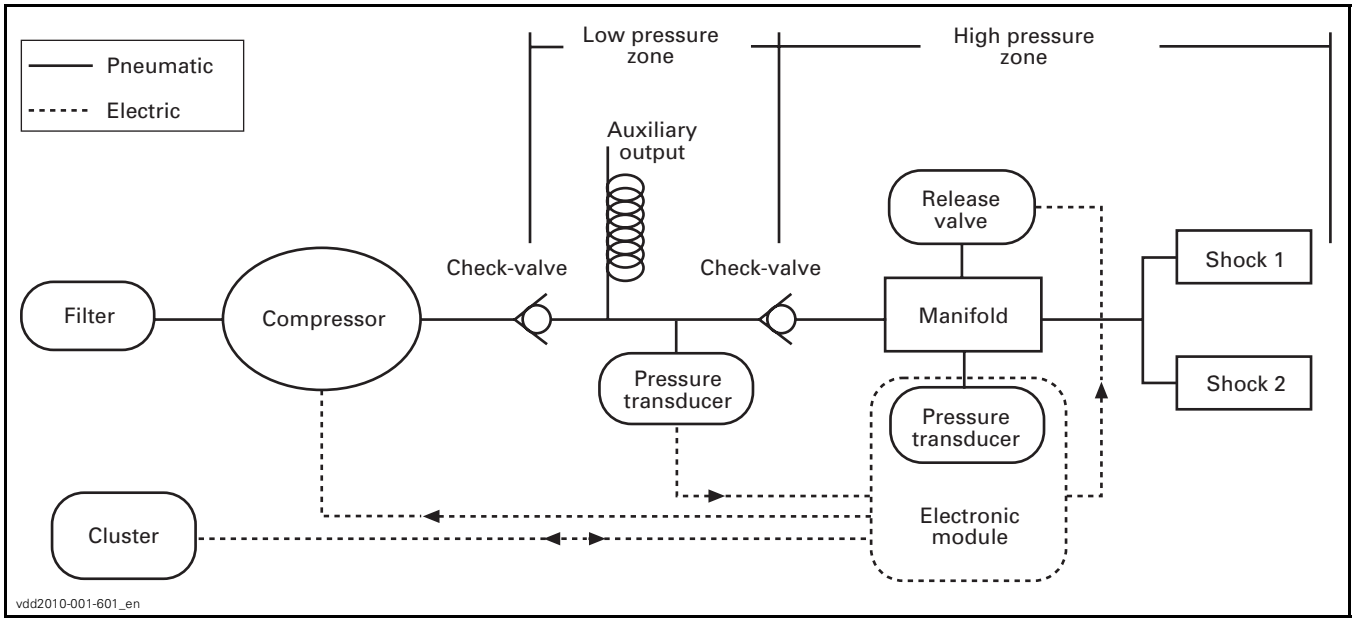

www.midwestmanuals.com

TROUBLESHOOTING

DIAGNOSTIC TIPS

Error Code (AIR FAULT) Displayed in Gauge

The error code AIR FAULT can appear on the multifunction gauge for different reasons that are not necessarily related to a failure of the ACS system.

If the error code appears on the multifunction gauge, it indicates a disparity between the requested and the actual suspension settings. The system should react to correct this situation and the error code will disappear.

If the error code remains active for a long period, it may indicates a major leak in the system. In this case, the module will automatically shut down the compressor to prevent it from overheating. The shut down procedure of the compressor will stay active until the next restart of the vehicle (key OFF, key ON).

If there is a major leak in the system, check the system for leakage, refer to *ACS SYSTEM LEAK TEST (TROUBLESHOOTING WITH B.U.D.S.)* subsection.

Error Code Displayed and Suspension Setting Can Not Be Adjusted

If there is no leak, it is probably an electrical problem. In this case, an electrical failure of the compressor or the solenoid valve will result the impossibility to change the actual suspension setting.

After multiple attempts to change suspension setting, the module will activate error code AIR FAULT. Refer to *TROUBLESHOOTING GUIDELINES* for further troubleshooting procedure.

TROUBLESHOOTING GUIDELINES

Requested Setting Display Does Not Change in Gauge

1. Check the override/ACS button as detailed in *OVERRIDE SWITCH* in the *LIGHTS GAUGE AND ACCESSORIES* subsection of the appropriate Shop Manual.

Suspension Setting Can Not Be Changed

1. Check the override/ACS button as detailed in *OVERRIDE SWITCH* in the *LIGHTS GAUGE AND ACCESSORIES* subsection of the appropriate Shop Manual.
2. Check fuse (F14).
3. Check ACS module signal continuity.
4. Check ACS module input voltage.
5. Check ACS module ground.

Refer to *ACS MODULE* to see the complete testing procedures.

Suspension Setting Can Be Reached to Decrease Pressure Only

1. Check relay (R5).
2. Check ACS compressor operation.
3. Check ACS compressor input voltage.

Refer to *ACS COMPRESSOR* to see the complete testing procedures.

Suspension Setting Can Be Reached To Increase Pressure Only

1. Check ACS solenoid valve operation.
2. Check ACS solenoid valve input voltage.

Refer to *ACS SOLENOID VALVE* to see the complete testing procedures.

No Pressure Output from the Auxiliary Line

1. Ensure that ACS suspension setting is adjusted to *ACS 6* to provide the maximum air pressure in the auxiliary line.
2. Check pressure transducer for air leakage.
3. Check signal continuity of the auxiliary line pressure transducer.
4. Check input voltage of the auxiliary line pressure transducer.
5. Check ground of the auxiliary line pressure transducer.
6. Check compressor operation.

Multifunction Gauge Display Flickers OFF and Back ON

1. Check diode (D7) of the solenoid valve.

NOTE: The diode (D7) is located on the main harness near the ACS sub-harness junction. Refer to the appropriate *WIRING DIAGRAM* for location.

www.midwestmanuals.com

TROUBLESHOOTING WITH B.U.D.S.

ACS System Leak Test

1. Connect vehicle to B.U.D.S. Refer to *COMMUNICATION TOOLS AND B.U.D.S. SOFTWARE* subsection of the appropriate Shop Manual.
2. Select **Activation** page.
3. Select **ACS** folder.
4. Press **Test START** button to proceed.

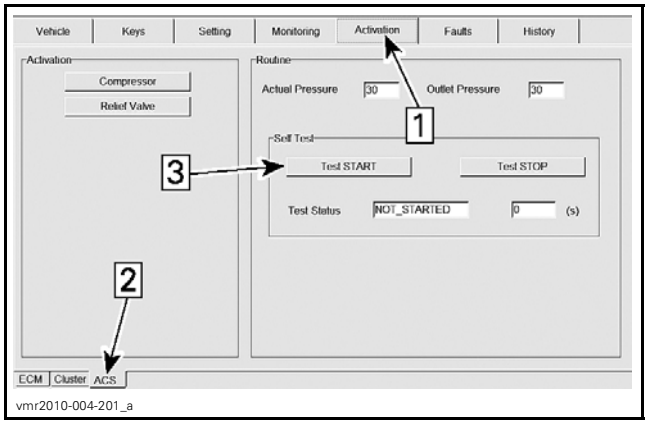

Step 1: Activation page
Step 2: ACS folder
Step 3: Leak Test START button

After pressing **Test START** button, the compressor will pressurize the air system at 6.5 bar (90 PSI) for approximately 2 minutes and B.U.D.S. will monitor the system for any leakage. The result will be indicated in the TEST STATUS box.

If a leak is detected, pressurize the system again and inspect hoses and fittings with soapy water to locate the faulty component.

If no leak is detected from hoses or fittings, inspect the compressor check valve and the auxiliary line check valve with soapy water.

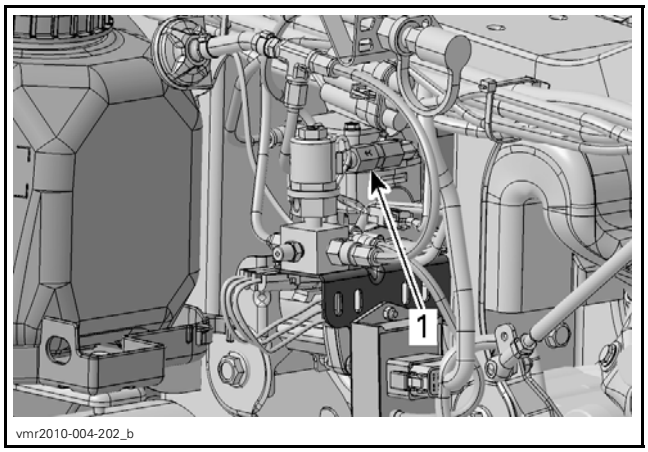

1. Compressor check valve

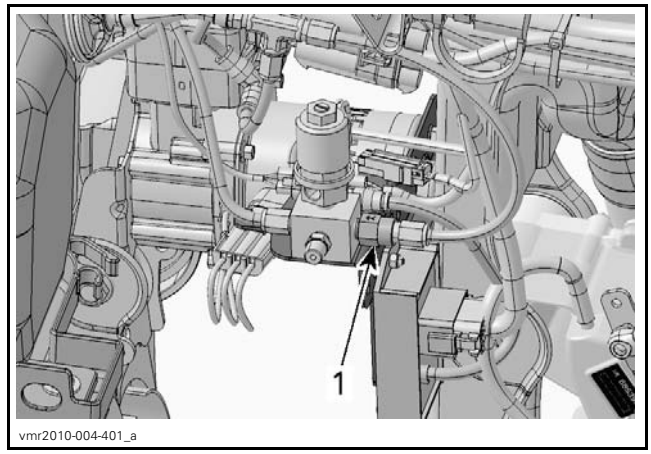

1. Auxiliary line check valve

ACS Air Pressure Monitoring

To monitor air pressure in the system during troubleshooting operation, proceed as follows:

1. Connect vehicle to B.U.D.S. Refer to *COMMUNICATION TOOLS AND B.U.D.S. SOFTWARE* subsection of the appropriate Shop Manual.
2. Select **Monitoring** page.
3. Select **ACS** folder.

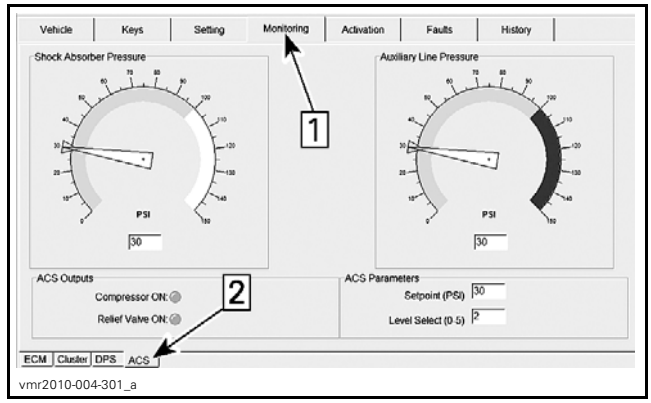

Step 1: Monitoring page
Step 2: ACS folder

PROCEDURES

ACS SOLENOID VALVE

ACS Solenoid Valve Operation Test

1. Connect vehicle to B.U.D.S. Refer to *COMMUNICATION TOOLS AND B.U.D.S. SOFTWARE* subsection of the appropriate Shop Manual.
2. Select **Activation** page.
3. Select **ACS** folder.
4. Press **Relief Valve** button to proceed.

www.midwestmanuals.com

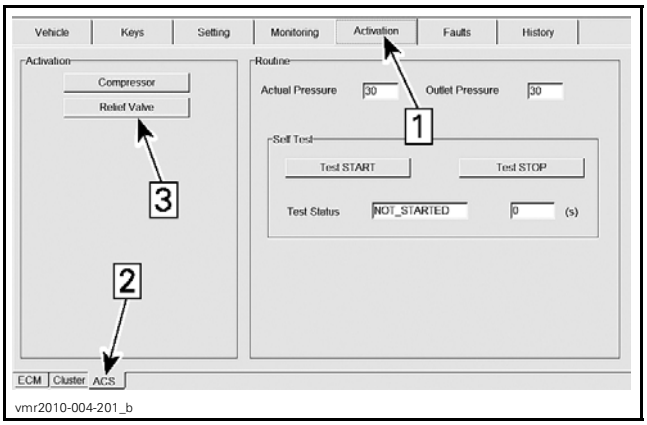

vmr2010-004-201_b

Step 1: Activation page
Step 2: ACS folder
Step 3: Solenoid valve operation test button

5. Verify that air exits from side port to confirm proper solenoid operation.

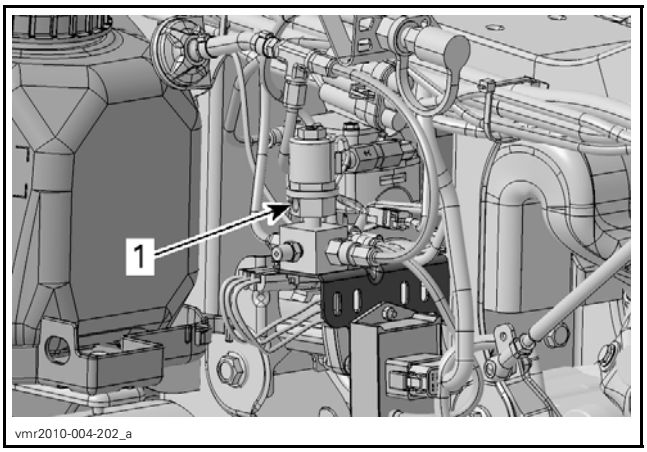

vmr2010-004-202_a

1. Side port

ACS Solenoid Valve Input Voltage Test

1. Remove seats and RH side panel.
2. Place ignition switch to ON position.
3. Press selector button several times until *AIR_SUSP* is displayed.

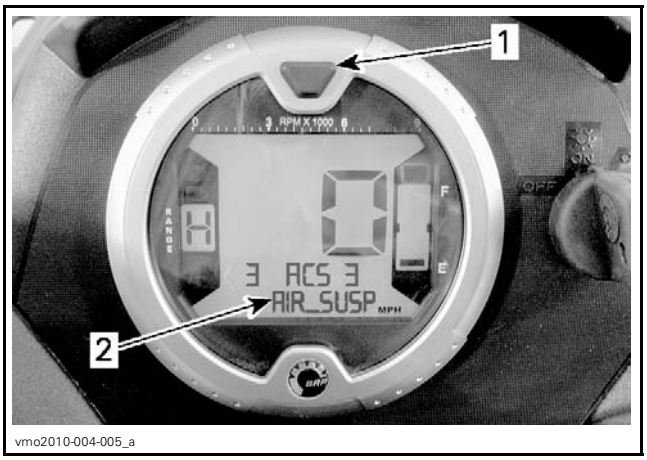

vmo2010-004-005_a

1. Selector button
2. AIR_SUSP displayed

4. Set suspension mode to **ACS 2** using the **ACS** button.
5. Wait until the actual setting shows 2 (LH display).

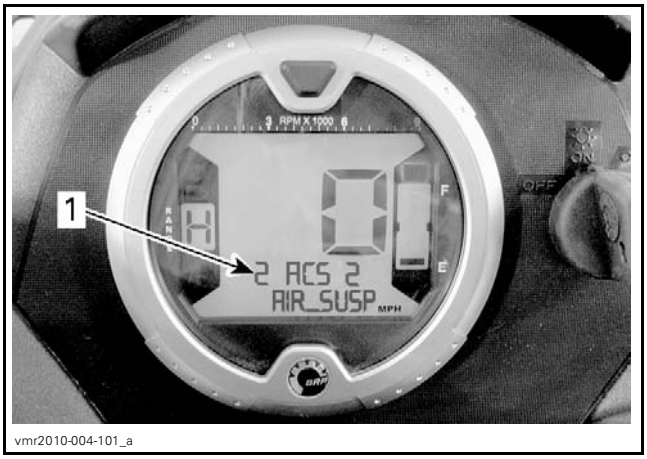

vmr2010-004-101_a

1. Actual setting (pressure transducer reading)

NOTE: Make sure to wait enough time in order to let the system adjust the air pressure.

6. Set the FLUKE 115 MULTIMETER (P/N 529 035 868) to Vdc.
7. Back probe solenoid connector (without disconnecting).

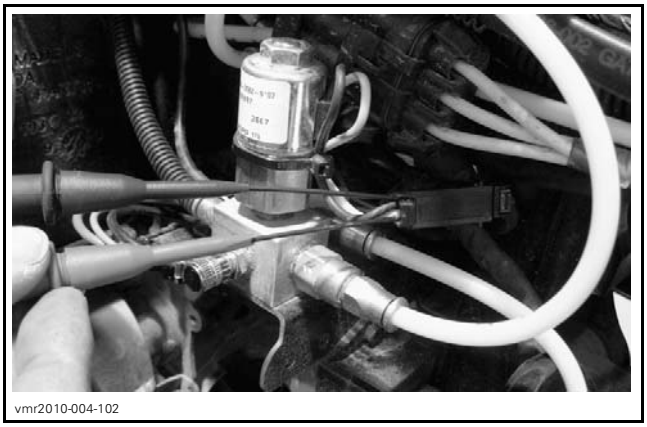
vmr2010-004-102

8. Set suspension mode to **ACS 1** using the **ACS** button.
9. Measure voltage between solenoid connector terminals as per the following table.

TEST PROBES	VOLTAGE
Pin 2 (YL/GN)	Battery voltage (± 12 Vdc)
Pin 1 (BK)	

ACS Solenoid Valve Removal

1. Release air pressure, refer to *RELEASING AIR PRESSURE IN SYSTEM FOR SERVICING* in this subsection.

www.midwestmanuals.com

2. Disconnect solenoid valve connector.

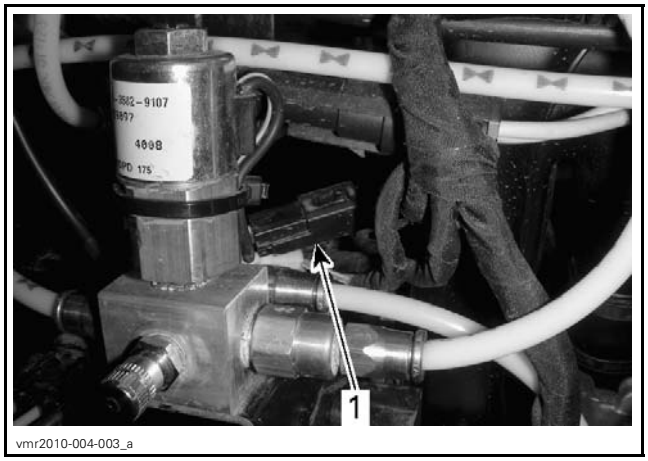

vmr2010-004-003_a

1. Solenoid valve connector

3. Unscrew solenoid valve from manifold while holding support.

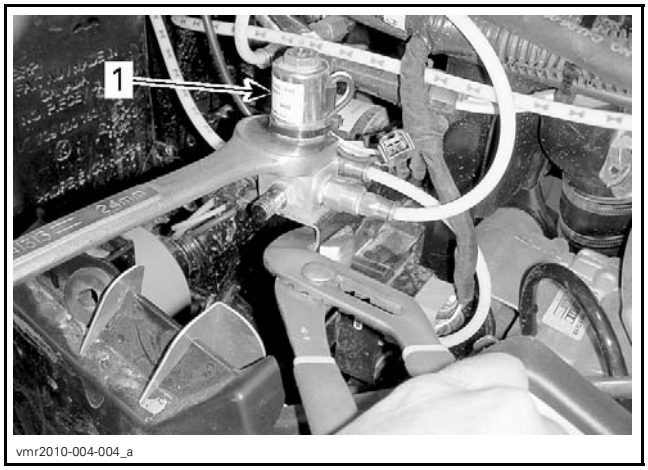

vmr2010-004-004_a

1. Solenoid valve

ACS Solenoid Valve Installation

The installation procedure is the reverse of removal procedure, however pay attention to the following.

Apply LOCTITE 592 (PIPE SEALANT) (P/N 293 800 018) on solenoid valve male threads.

ACS MANIFOLD

ACS Manifold Removal

1. Release air pressure, refer to *RELEASING AIR PRESSURE IN SYSTEM FOR SERVICING* in this subsection.
2. Remove solenoid valve. Refer to *ACS SOLENOID VALVE REMOVAL*.
3. Disconnect the following hoses from manifold air fittings.
   – Manifold air inlet hose (from compressor)
   – Module hose
   – Shocks hose.

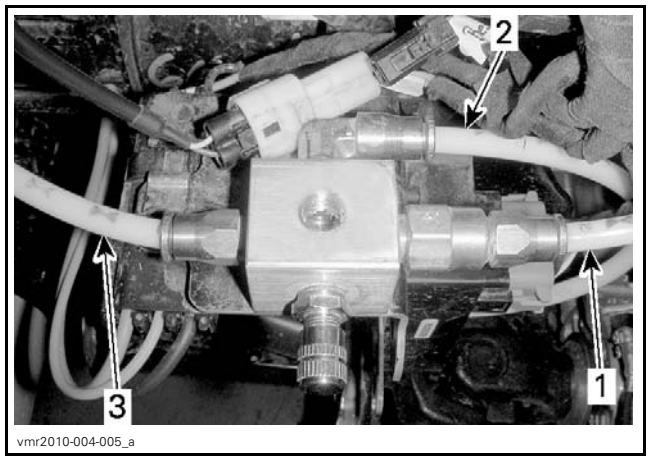

vmr2010-004-005_a

1. Manifold air inlet hose (from compressor)
2. Module hose
3. Shocks hose

4. To disconnect hoses, proceed as follows:
   4.1 Push fitting ring toward manifold.
   4.2 Hold ring in place.
   4.3 Pull air hose.

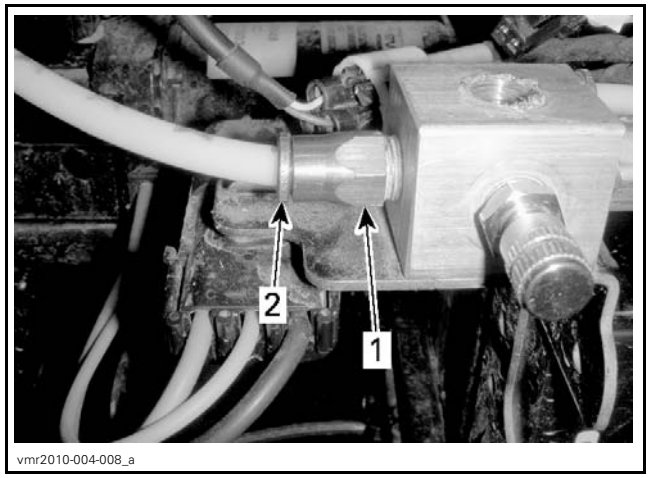

vmr2010-004-008_a

1. Fitting
2. Fitting ring

5. From underneath support, remove manifold retaining screws.

www.midwestmanuals.com

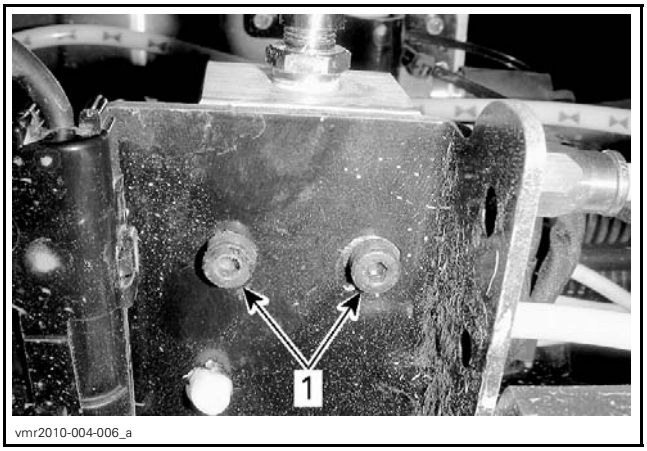

1. Retaining screws

6. Unscrew air fittings, pneumatic valve and check valve.

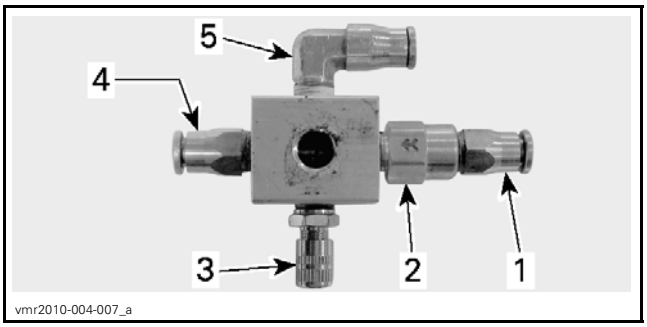

1. Manifold air inlet fitting (from compressor)
2. Auxiliary line check valve
3. Pneumatic valve
4. Shocks fitting
5. Module fitting

ACS Manifold Installation

The installation procedure is the reverse of removal procedure, however pay attention to the following.

If fitting is the one previously removed (old one), apply LOCTITE 592 (PIPE SEALANT) (P/N 293 800 018) on all male threads.

If fitting is a new one, do not apply sealant, it should be already applied on male threads.

On pneumatic valve, check valve, and solenoid valve, apply LOCTITE 592 (PIPE SEALANT) (P/N 293 800 018) on all male threads.

Install check valve with arrows pointing toward manifold.



Install air fittings, pneumatic valve and check valve as follows.

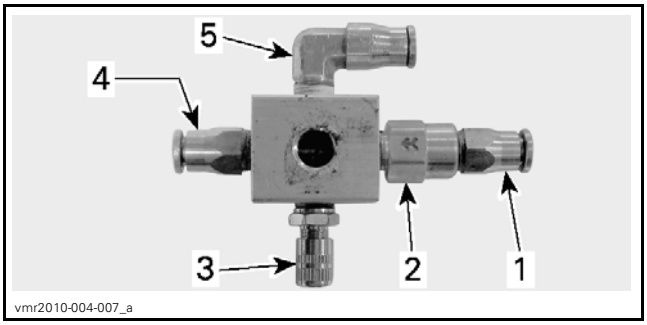

RETAINING SCREWS ARE OFFSET TOWARD MODULE FITTING
1. Manifold air inlet fitting (from compressor)
2. Auxiliary line check valve
3. Pneumatic valve
4. Shocks fitting
5. Module fitting

Ensure that air hoses are properly inserted into fittings, refer to the following illustrations.

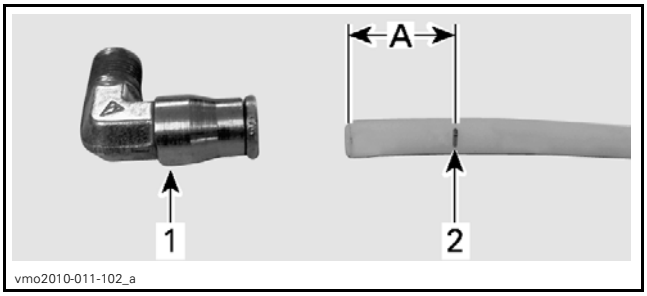

PUSH HOSE UNTIL THE MARK IS COMPLETELY INSERTED
1. Fitting
2. Mark
A. Must be inserted into fitting

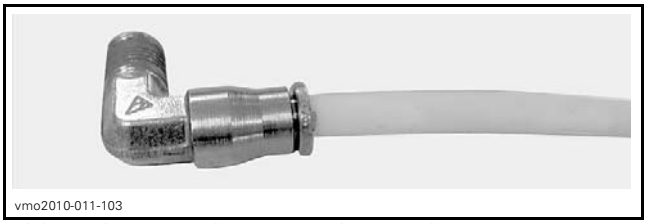

HOSE PROPERLY INSERTED INTO FITTING

www.midwestmanuals.com

ACS MODULE

ACS Module Signal Circuit Continuity Test

1. Remove seats and RH side panel.
2. Disconnect multifunction gauge from vehicle. Refer to *LIGHTS, GAUGE AND ACCESSORIES* subsection of the appropriate Shop Manual.
3. Disconnect ACS module connector.

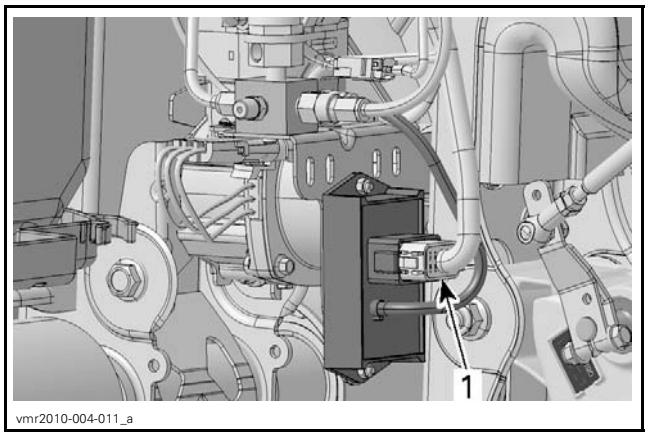

1. Module connector

4. Set the FLUKE 115 MULTIMETER (P/N 529 035 868) to Ω.
5. Measure resistance as per the following tables.

TEST PROBES	RESISTANCE
Gauge pin 18 (BK/BE)	Close to 0 Ω
Module pin 5 (BE/GN)	

TEST PROBES	RESISTANCE
Gauge pin 19 (BE/GN)	Close to 0 Ω
Module pin 6 (WH/BE)	

ACS Module Input Voltage Test

1. Remove seats and RH side panel.
2. Disconnect module connector.

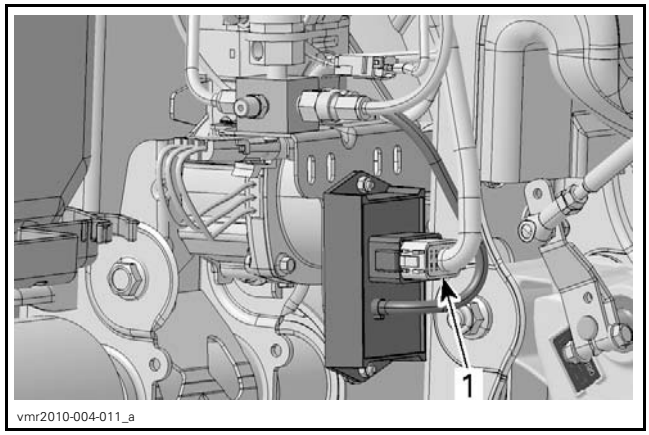

1. Module connector

3. Set the FLUKE 115 MULTIMETER (P/N 529 035 868) to Vdc.
4. Place ignition switch to ON position.
5. Measure voltage as per the following table.

TEST PROBES	VOLTAGE
Pin 12 (OR/GN)	Battery voltage (± 12 Vdc)
Battery negative (-) post	

ACS Module Ground Test

1. Remove seats and RH side panel.
2. Disconnect module connector.

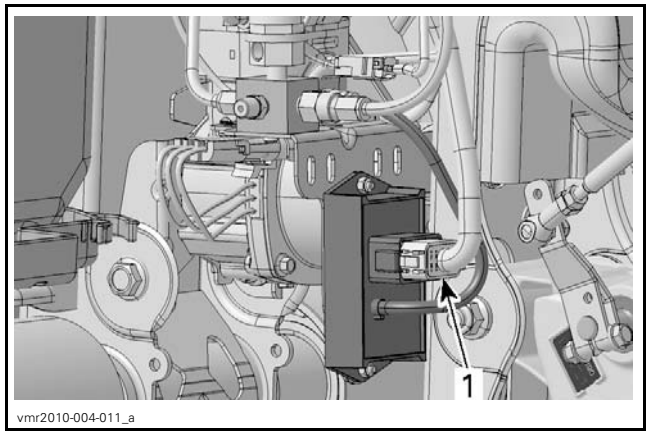

1. Module connector

3. Set the FLUKE 115 MULTIMETER (P/N 529 035 868) to Vdc.
4. Place ignition switch to ON position.
5. Measure voltage as per the following table.

TEST PROBES	VOLTAGE
Pin 7 (BK)	Battery voltage (± 12 Vdc)
Battery positive (+) post	

www.midwestmanuals.com

ACS Module Removal

1. Release air pressure, refer to *RELEASING AIR PRESSURE IN SYSTEM FOR SERVICING* in this subsection.
2. Disconnect module hose from manifold air fitting as follows:
   2.1 Push fitting ring toward manifold.
   2.2 Hold ring in place.
   2.3 Pull air hose.

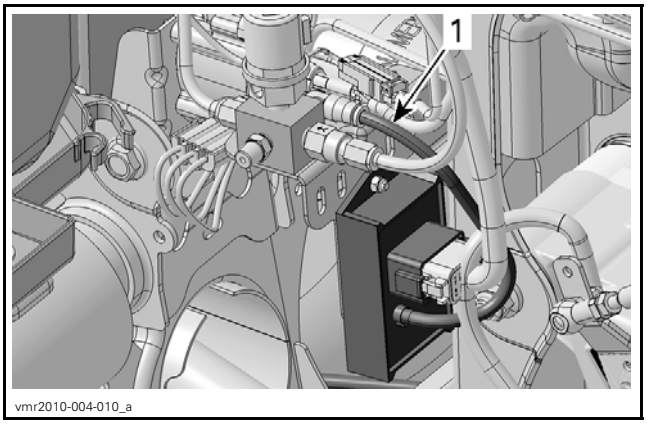

1. Module hose

NOTICE Do not attempt to disconnect hose from module.

3. Disconnect module connector.

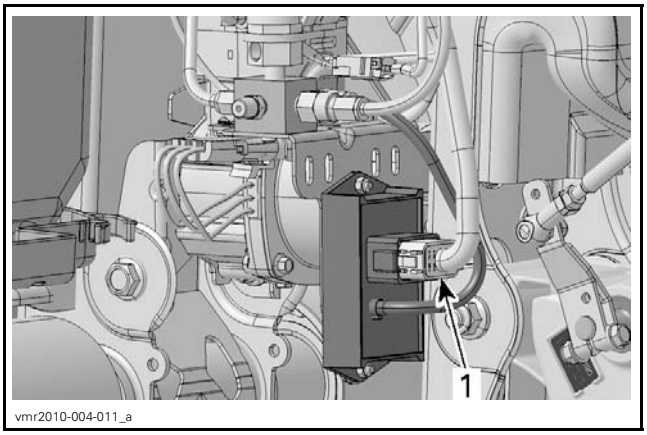

1. Module connector

4. Remove module retaining bolts and nuts.

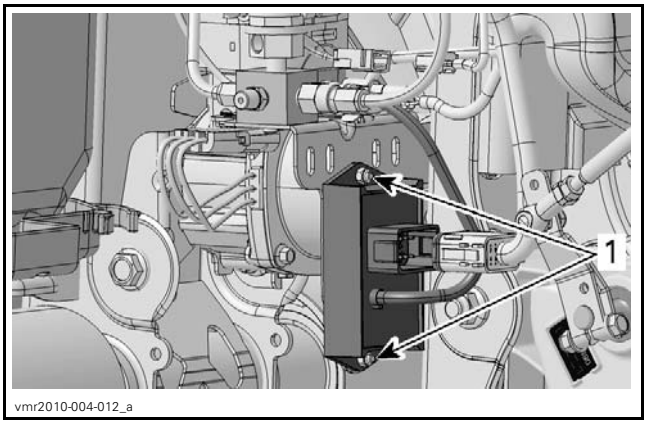

1. Module retaining bolt

5. Remove module from vehicle.

ACS Module Installation

The installation procedure is the reverse of removal procedure, however pay attention to the following.

If a new ACS module is installed, check diode (D7) of the solenoid valve to ensure that it is not defective as it can damage the ACS module. The diode (D7) is located on the main harness near the ACS sub-harness junction. Refer to the appropriate *WIRING DIAGRAM* for diode location.

Ensure that air hoses are properly inserted into fittings, refer to the following illustrations.

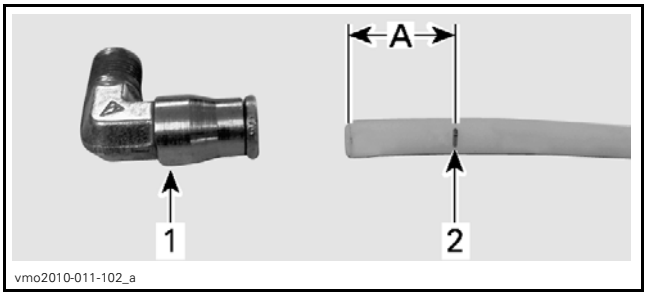

PUSH HOSE UNTIL THE MARK IS COMPLETELY INSERTED
1. Fitting
2. Mark
A. Must be inserted into fitting

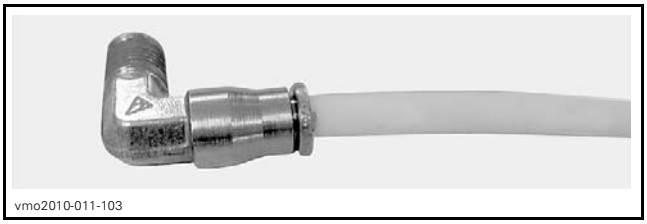

HOSE PROPERLY INSERTED INTO FITTING

www.midwestmanuals.com

ACS COMPRESSOR RELAY (R5)

ACS Relay Continuity Test

1. Remove relay (R5), refer to *FUSE AND RELAY* at the beginning of this section.
2. Set the FLUKE 115 MULTIMETER (P/N 529 035 868) to Ω.
3. Measure resistance as per the following table.

TEST PROBES	RESISTANCE
Terminal 30	Open (OL)
Terminal 87	

4. Apply 12 volts on terminals 86 and 85.
5. Measure resistance again as per the following table.

TEST PROBES	RESISTANCE
Terminal 30	Close to 0 Ω
Terminal 87	

If results are not as per the above tables, replace relay.

ACS Relay Input Voltage Test

1. Remove relay (R5), refer to *FUSE AND RELAY* at the beginning of this section.
2. Set the FLUKE 115 MULTIMETER (P/N 529 035 868) to Vdc.
3. Place ignition switch to ON position.
4. Measure voltage as per the following tables.

Outlander 500 LTD

TEST PROBES	VOLTAGE
Fuse box pin 6D (OR/GN)	Battery voltage (± 12 Vdc)
Battery negative (-) post	

Outlander 800R LTD

TEST PROBES	VOLTAGE
Fuse box pin 12A (OR/GN)	Battery voltage (± 12 Vdc)
Battery negative (-) post	

Outlander 500 LTD

TEST PROBES	VOLTAGE
Fuse box pin 7D (BE/PK)	Battery voltage (± 12 Vdc)
Battery negative (-) post	

Outlander 800R LTD

TEST PROBES	VOLTAGE
Fuse box pin 12B (BE/PK)	Battery voltage (± 12 Vdc)
Battery negative (-) post	

If voltage is not as specified, check wiring, connector and terminal condition.

ACS Relay Ground Wire Continuity Test

1. Remove relay (R5), refer to *FUSE AND RELAY* at the beginning of this section.
2. Disconnect module connector.

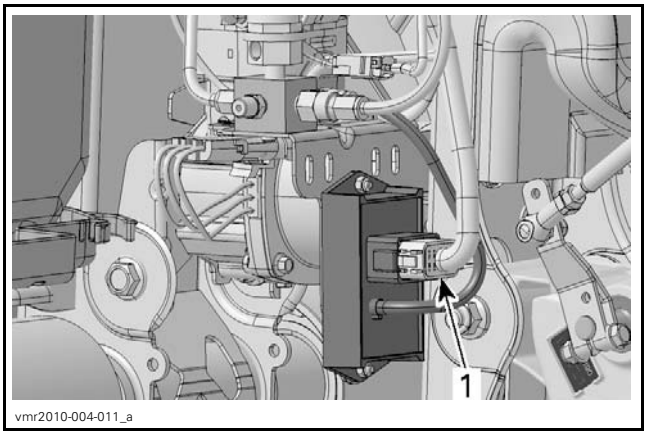

1. Module connector

3. Set the FLUKE 115 MULTIMETER (P/N 529 035 868) to Ω.
4. Measure resistance as per the following table.

Outlander 500 LTD

TEST PROBES	RESISTANCE
Module pin 8 (OR/PK)	Close to 0 Ω
Fuse box pin 7C (OR/PK)	

Outlander 800R LTD

TEST PROBES	RESISTANCE
Module pin 8 (OR/PK)	Close to 0 Ω
Fuse box pin 11B (OR/PK)	

ACS COMPRESSOR

ACS Compressor Operation Test

1. Connect vehicle to B.U.D.S. Refer to *COMMUNICATION TOOLS AND B.U.D.S. SOFTWARE* subsection of the appropriate Shop Manual.

www.midwestmanuals.com

2. Select **Activation** page.
3. Select **ACS** folder.
4. Press **Compressor** button to proceed.

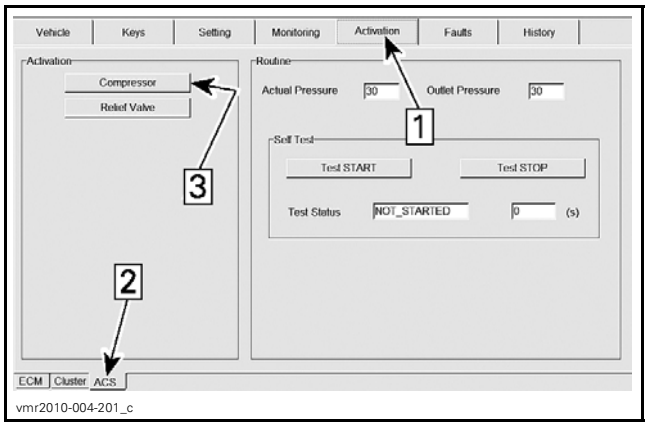

Step 1: Activation page
Step 2: ACS folder
Step 3: Compressor operation test button

5. Verify if compressor works properly.

ACS Compressor Power Wire Continuity Test (from Relay)

1. Remove relay, refer to *FUSE AND RELAY* at the beginning of this section.
2. Disconnect compressor connector.

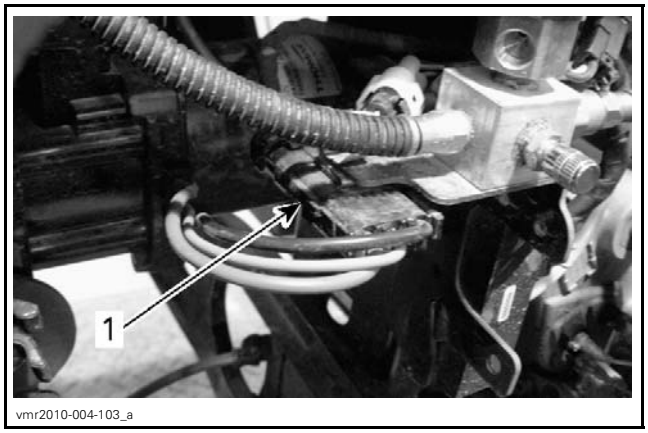

1. Compressor connector

3. Set the FLUKE 115 MULTIMETER (P/N 529 035 868) to Ω.
4. Measure resistance as per the following table.

Outlander 500 LTD

TEST PROBES	RESISTANCE
Compressor pin C (BE/VI)	Close to 0 Ω
Fuse box pin 6C (BE/VI)	

Outlander 800R LTD

TEST PROBES	RESISTANCE
Compressor pin C (BE/VI)	Close to 0 Ω
Fuse box pin 11A (BE/VI)	

ACS Compressor Input Voltage Test

1. Release air pressure, refer to *RELEASING AIR PRESSURE IN SYSTEM FOR SERVICING* in this subsection.
2. Set the FLUKE 115 MULTIMETER (P/N 529 035 868) to Vdc.
3. Disconnect compressor connector.

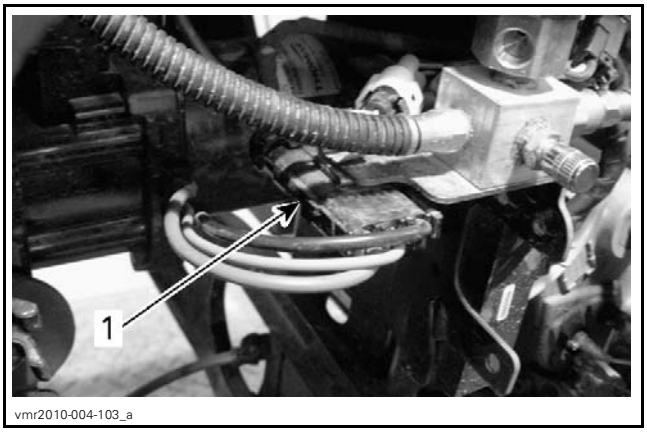

1. Compressor connector

4. Place ignition switch to ON position.
5. Probe compressor connector.
6. Press selector button several times until *AIR_SUSP* is displayed.

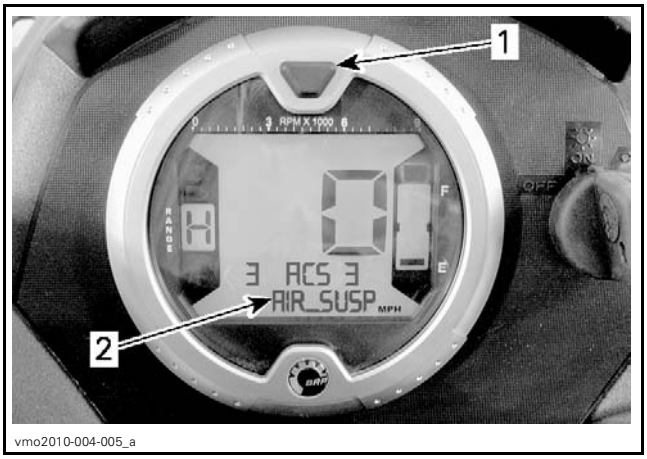

1. Selector button
2. AIR_SUSP displayed

7. Set suspension mode to **ACS 2** using the **ACS** button.

www.midwestmanuals.com

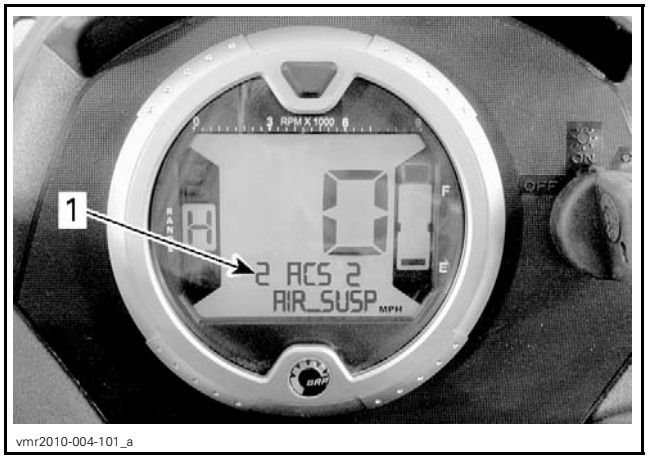

vmr2010-004-101_a

1. Actual setting (pressure transducer reading)

8. Measure voltage between compressor connector terminals as per the following table.

TEST PROBES	VOLTAGE
Pin C (BE/VI)	Battery voltage (± 12 Vdc)
Pin A (BK)	

ACS Compressor Removal

1. Release air pressure, refer to *RELEASING AIR PRESSURE IN SYSTEM FOR SERVICING* in this subsection.
2. Remove LH side panel.
3. Remove storage tray.

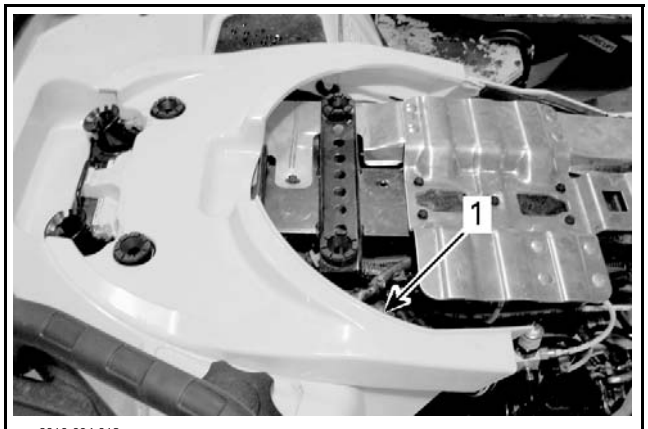

vmr2010-004-013_a

1. Storage tray

4. Remove solenoid valve. Refer to *ACS SOLENOID VALVE REMOVAL*.
5. Remove manifold. Refer to *ACS MANIFOLD REMOVAL*.
6. Remove module. Refer to *ACS MODULE REMOVAL*.
7. Remove connector of auxiliary line pressure transducer from support.



vmr2010-004-014_a

1. Connector of auxiliary line pressure transducer

8. Disconnect compressor connector.

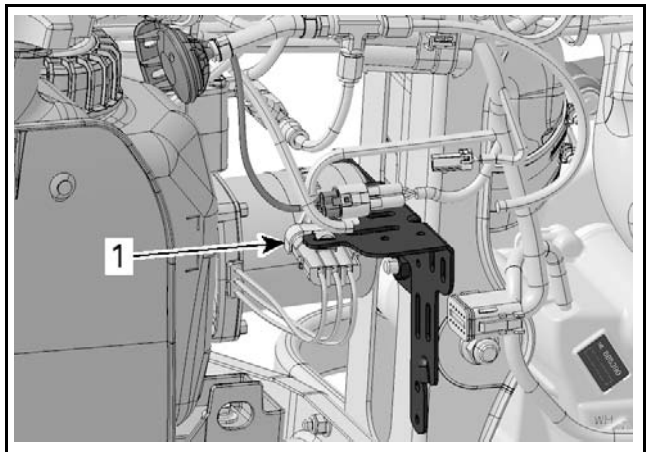

vmr2010-004-015_a

1. Compressor connector

9. Disconnect the following hoses from compressor air fittings.
   - Compressor air inlet hose
   - Compressor air outlet hose
   - Auxiliary line hose.

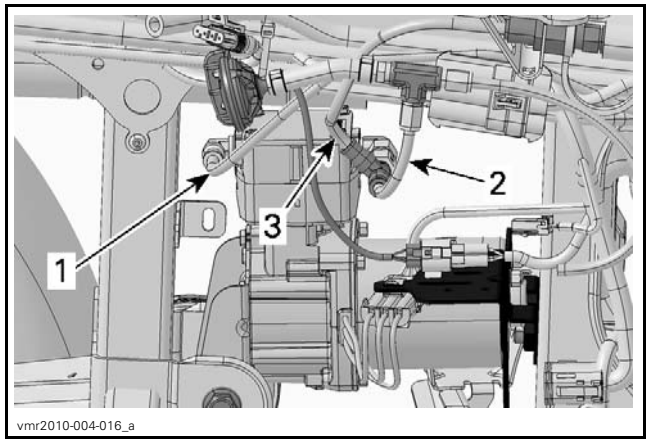

vmr2010-004-016_a

1. Compressor air inlet hose
2. Compressor air outlet hose
3. Auxiliary line hose

www.midwestmanuals.com

10. To disconnect hoses, proceed as follows:
    10.1 Push fitting ring toward manifold.
    10.2 Hold ring in place.
    10.3 Pull air hose.
11. Remove compressor side retaining bolts and nuts.

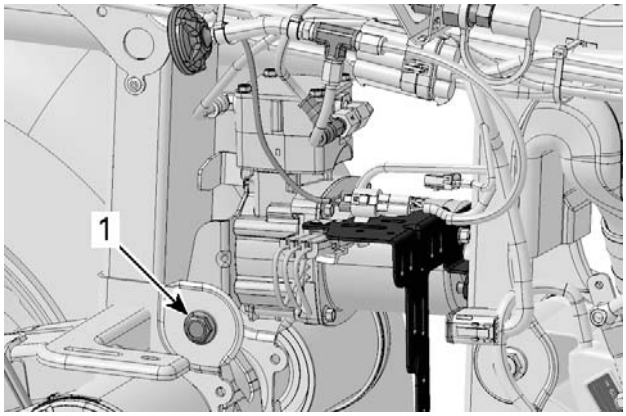

1. RH side retaining bolt

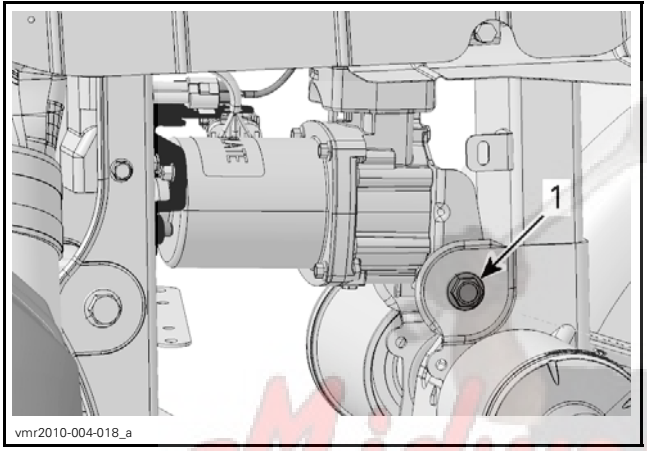

1. LH side retaining bolt

12. Remove compressor front retaining screws.

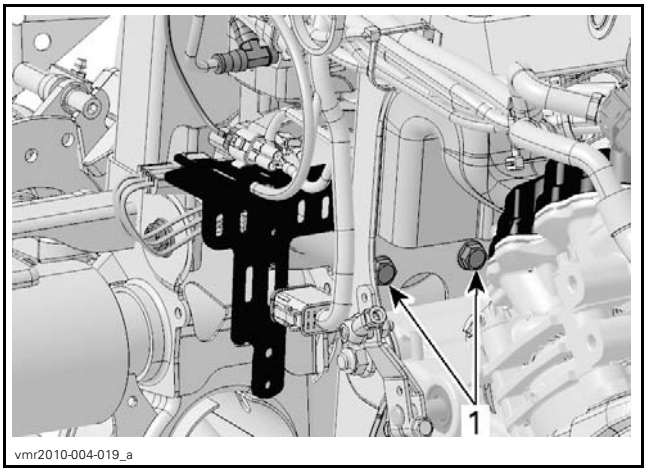

1. Front retaining screws

13. Remove compressor from vehicle by pulling it upwards.

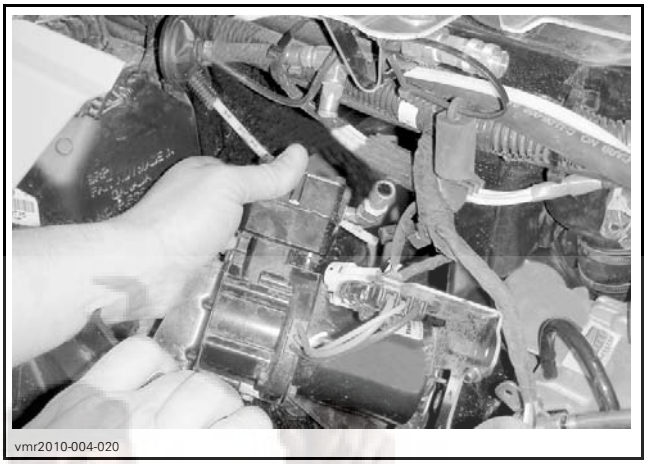

14. Detach compressor connector from front support.
15. Remove mounting nuts from compressor front support.
16. Remove front support from compressor.

Midwest Manuals
sales@midwestmanuals.com
www.midwestmanuals.com

www.midwestmanuals.com

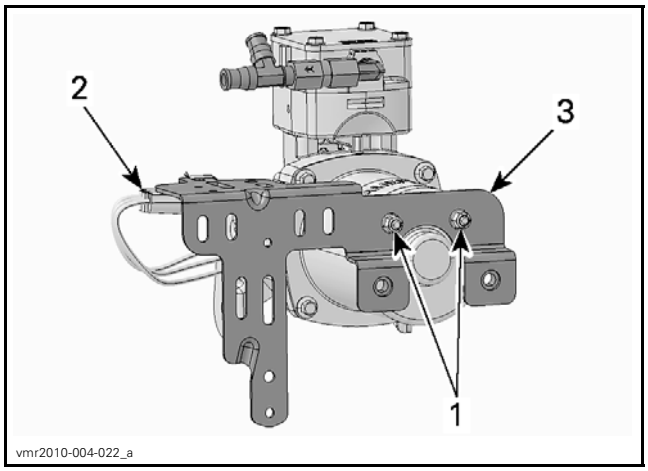

1. *Front support mounting nuts*
2. *Compressor connector*
3. *Front support*

NOTICE Do not remove rear support from compressor.

17. Remove the following fittings from compressor.
    - Compressor air inlet fitting
    - Compressor T-fitting
    - Compressor check valve.

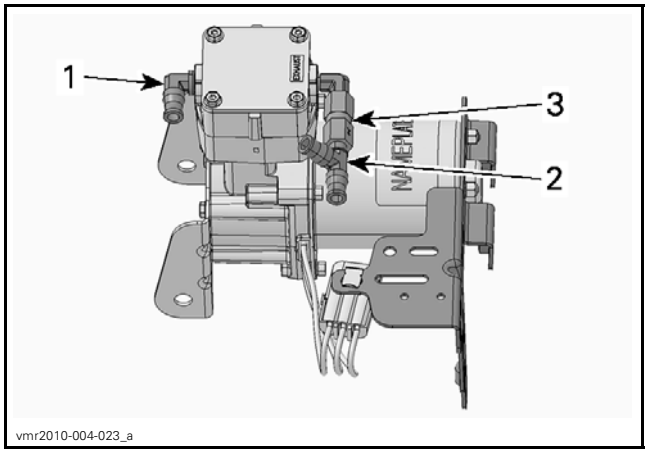

1. *Compressor air inlet fitting*
2. *Compressor T-fitting*
3. *Compressor check valve*

ACS Compressor Installation

The installation procedure is the reverse of removal procedure, however pay attention to the following.

If fitting or valve is the one previously removed (old one), apply LOCTITE 592 (PIPE SEALANT) (P/N 293 800 018) on all male threads.

If fitting or valve is a new one, do not apply sealant, it should be already applied on male threads.

Install T-fitting with an angle of 45° as shown on following illustration.

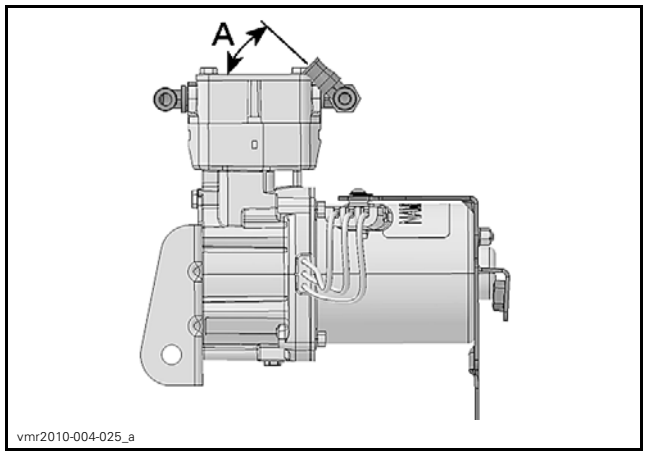

A. 45°

Ensure that check valve is installed with arrows pointing toward T-fitting.

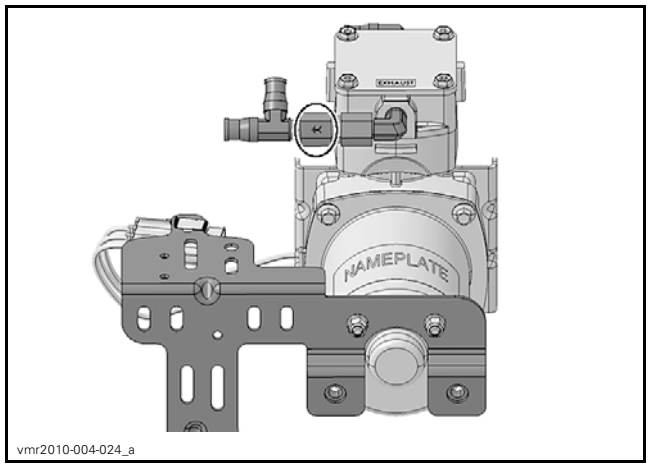

Ensure that air hoses are properly inserted into fittings, refer to the following illustrations.

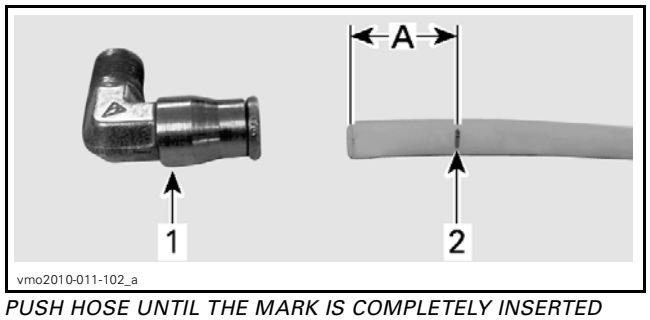

PUSH HOSE UNTIL THE MARK IS COMPLETELY INSERTED
1. *Fitting*
2. *Mark*

A. Must be inserted into fitting

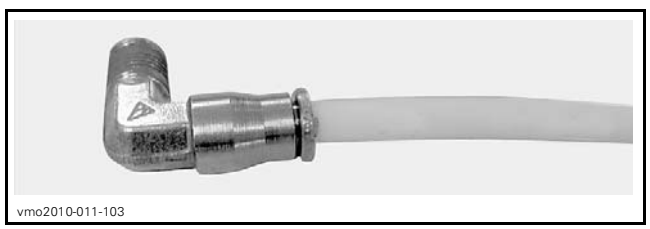

HOSE PROPERLY INSERTED INTO FITTING

www.midwestmanuals.com

ACS AIR FILTER

ACS Air Filter Removal

1. Remove seat.
2. Remove central panel.



vmo2006-007-026_a

1. Central panel
2. Tabs to pull

3. Lift dashboard upwards.

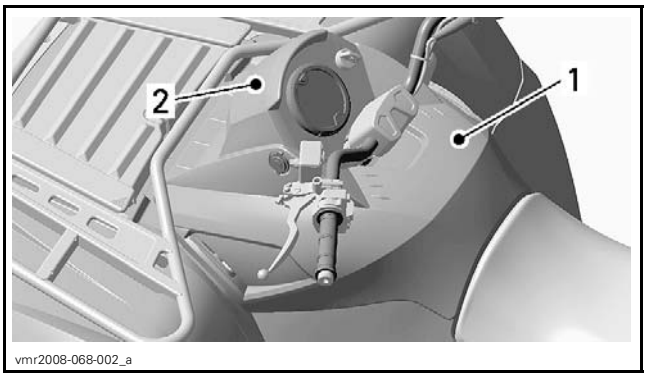

vmr2008-068-002_a

TYPICAL
1. Central panel
2. Dashboard

4. Release clamps and remove air filter box cover.

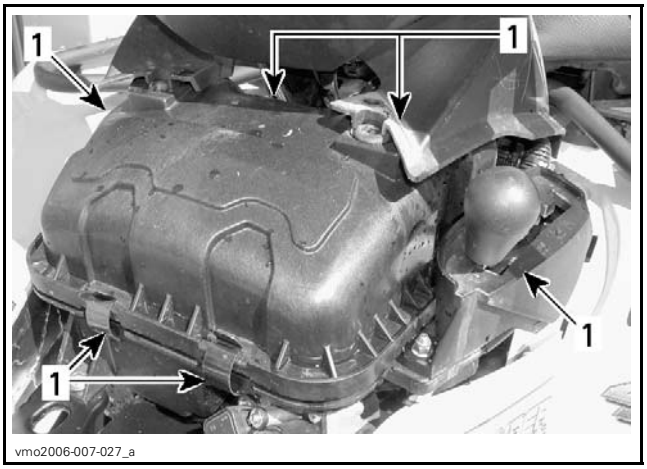

vmo2006-007-027_a

1. Release clamps

5. Locate ACS compressor air filter.
6. Unscrew ACS compressor air filter from air box.

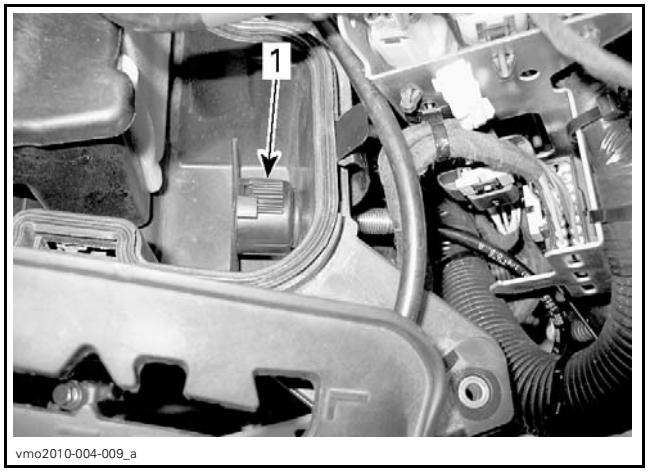

vmo2010-004-009_a

1. ACS compressor air filter

7. Push tabs then open cover.

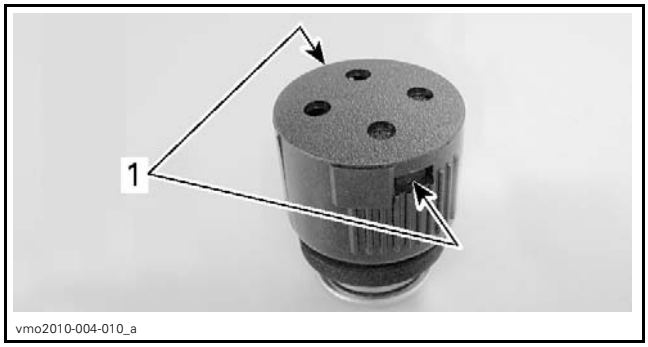

vmo2010-004-010_a

1. tabs

8. Remove prefilter (foam) and filter (disc).

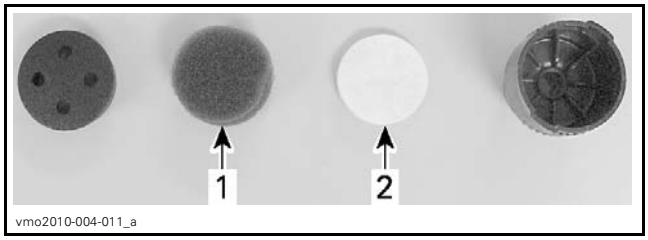

vmo2010-004-011_a

1. Prefilter (foam)
2. Filter (disc)

The installation is the reverse of removal procedure.

ACS Air Filter Cleaning

Remove ACS compressor air filter, refer to *AIR FILTER REMOVAL*.

Prefilter (Foam) Cleaning

1. Pour cleaning solution (P/N 219 700 341) or an equivalent into a bucket.
2. Put the prefilter in to soak for a few minutes.

www.midwestmanuals.com

3. Rinse the prefilter with warm water until all cleaning solution disappears.
4. Let the prefilter dry completely.

Filter (Disc) Cleaning

1. Blow low pressure compressed air on filter to clean it.

NOTICE **Do not wash the filter (disc) with any cleaning solution.**

Housing Cleaning

1. Blow low pressure compressed air in housing to clean it.

PRESSURE TRANSDUCER (ACS AUXILIARY LINE)

Pressure Transducer Signal Circuit Continuity Test

1. Remove seats and RH side panel.
2. Disconnect module connector.

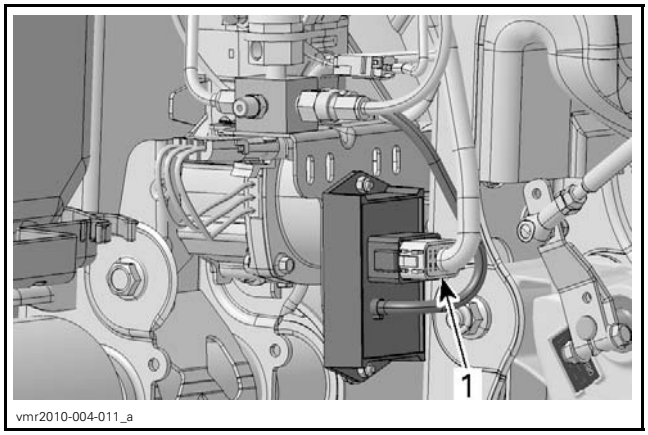

1. Module connector

3. Disconnect pressure transducer connector.

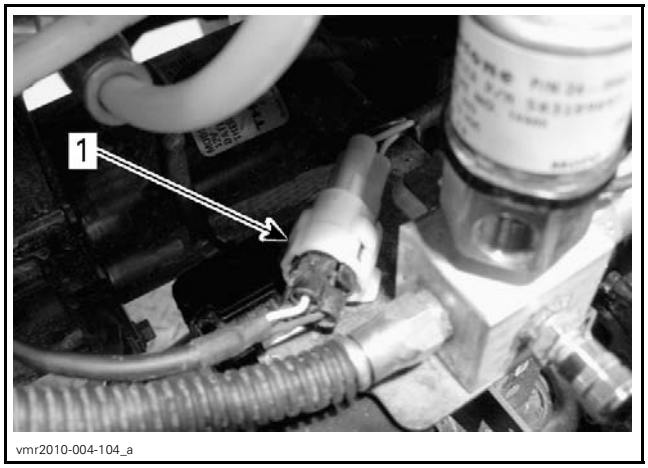

1. Pressure transducer connector

4. Set the FLUKE 115 MULTIMETER (P/N 529 035 868) to Ω.
5. Measure resistance as per the following table.

TEST PROBES	RESISTANCE
Pressure transducer pin 2 (PK/BR)	Close to 0 Ω
Module pin 3 (PK/BR)	

Refer to the following illustration for the pressure transducer connector pinout.

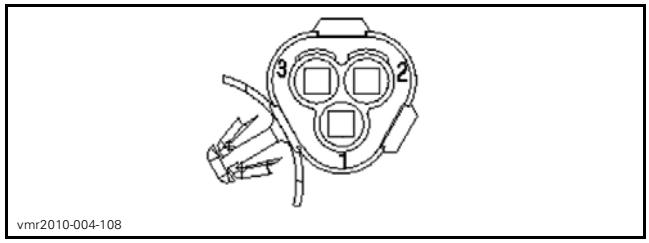

Pressure Transducer Input Voltage Test

1. Remove seats and RH side panel.
2. Disconnect pressure transducer connector.

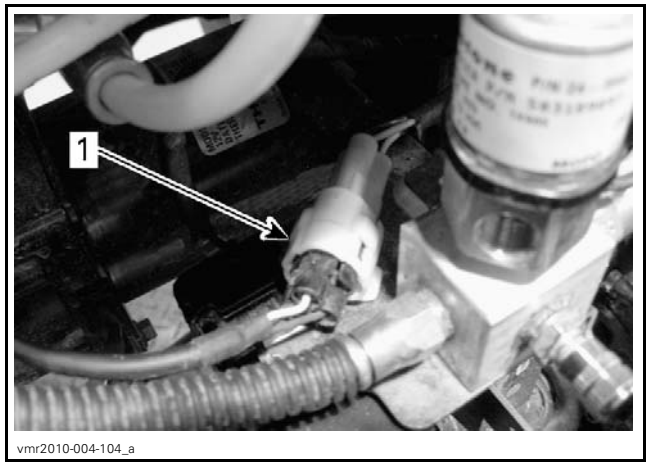

1. Pressure transducer connector

3. Set the FLUKE 115 MULTIMETER (P/N 529 035 868) to Vdc.
4. Place ignition switch to ON position.
5. Measure voltage as per the following table.

TEST PROBES	VOLTAGE
Pin 3 (PK/OR)	Battery voltage (± 12 Vdc)
Battery negative (-) post	

Refer to the following illustration for the pressure transducer connector pinout.

www.midwestmanuals.com

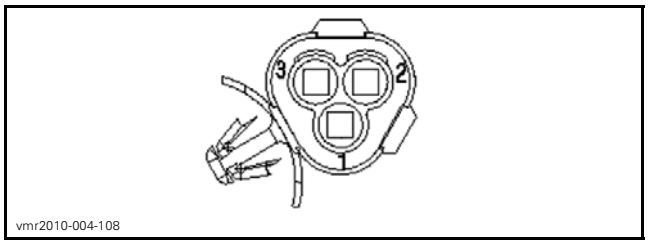

Pressure Transducer Ground Test

1. Remove seats and RH side panel.
2. Disconnect pressure transducer connector.

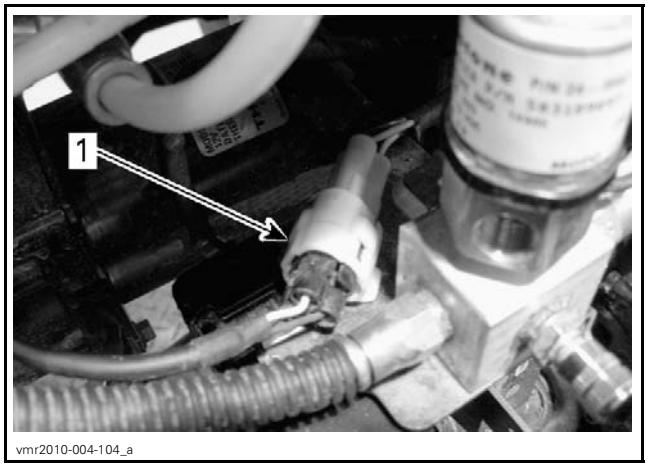

1. Pressure transducer connector

3. Set the FLUKE 115 MULTIMETER (P/N 529 035 868) to Vdc.
4. Place ignition switch to ON position.
5. Measure voltage as per the following table.

TEST PROBES	VOLTAGE
Pin 1 (BK/GY)	Battery voltage (± 12 Vdc)
Battery positive (+) post	

Refer to the following illustration for the pressure transducer connector pinout.

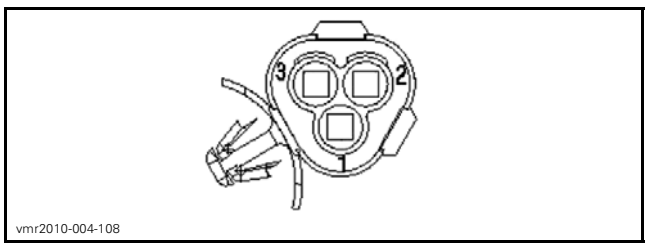

Pressure Transducer Replacement

1. Release air pressure, refer to *RELEASING AIR PRESSURE IN SYSTEM FOR SERVICING* in this subsection.
2. Disconnect pressure transducer connector.
3. Remove Oetiker clamp.
4. Remove pressure transducer from hose.

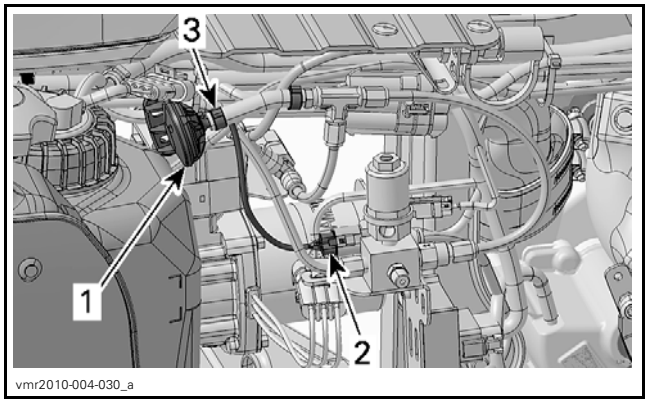

1. Auxiliary line pressure transducer
2. Connector
3. Oetiker clamp

5. Install a new pressure transducer on hose.
6. Install a new Oetiker clamp using OETIKER PLIERS (P/N 295 000 070).
7. Connect pressure transducer connector.
8. Ensure that there is no air leaks from pressure transducer hose. Refer to *ACS SYSTEM LEAK TEST (WITH B.U.D.S.)*.

ACS HOSES

ACS Hose and Fitting Replacement

1. Release air pressure, refer to *RELEASING AIR PRESSURE IN SYSTEM FOR SERVICING* in this subsection.
2. Locate hose or fitting to be replaced.
3. Remove it from vehicle.
4. Install the new hose or fitting.
5. Perform a *ACS SYSTEM LEAK TEST (WITH B.U.D.S.)*.

Auxiliary Line Adapter Replacement

1. Release air pressure, refer to *RELEASING AIR PRESSURE IN SYSTEM FOR SERVICING* in this subsection.
2. Disconnect auxiliary line hose from adapter as follows:
   2.1 Push fitting ring toward adapter.
   2.2 Hold ring in place.
   2.3 Pull air hose.

www.midwestmanuals.com

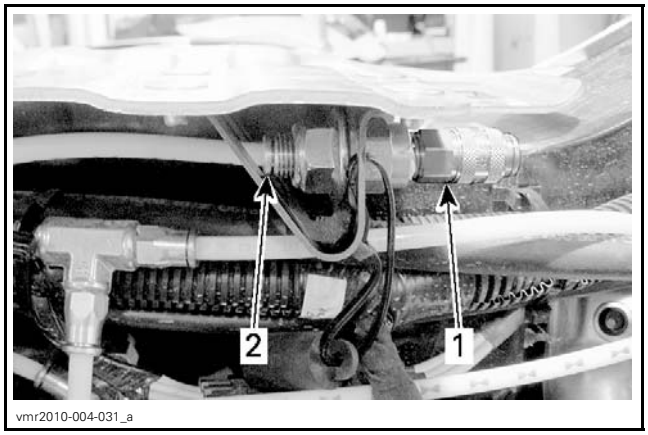

1. Auxiliary line adapter
2. Fitting ring

3. Drill retaining rivets.

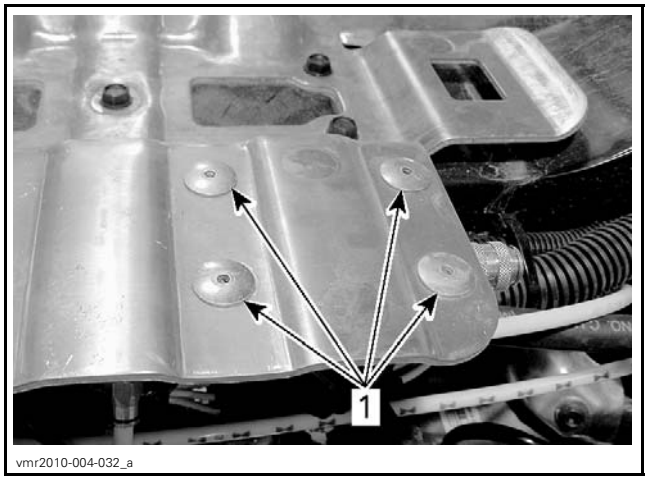

1. Retaining rivets

4. Install new adapter.
5. Secure adapter support using rivets.
6. Connect auxiliary line hose into adapter.

Ensure that air hoses are properly inserted into fittings, refer to the following illustrations.

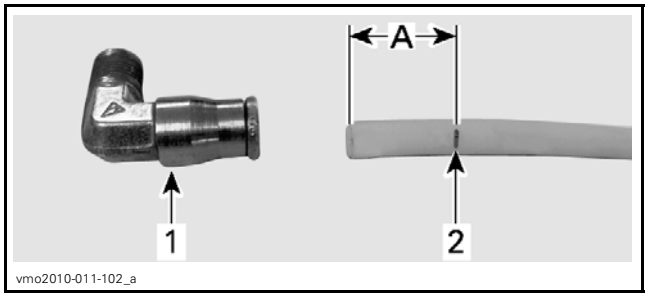

PUSH HOSE UNTIL THE MARK IS COMPLETELY INSERTED
1. Fitting
2. Mark
A. Must be inserted into fitting

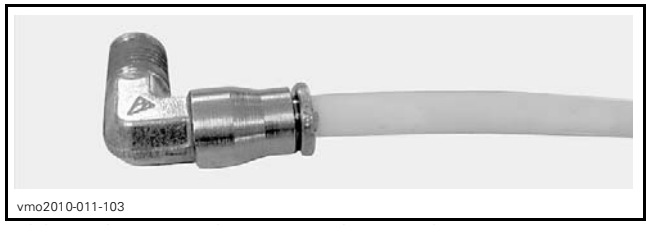

HOSE PROPERLY INSERTED INTO FITTING

SHOCK ABSORBERS

Shock Absorber Removal

1. Lift rear of vehicle until rear shock absorbers are fully extended.
2. Install jack stands or blocks under the frame to support the vehicle.
3. Unscrew air hose from shock absorber as follows:
   - 3.1 Install an appropriate wrench on shock fitting to hold it in place.
   - 3.2 Unscrew air hose fitting using another wrench.

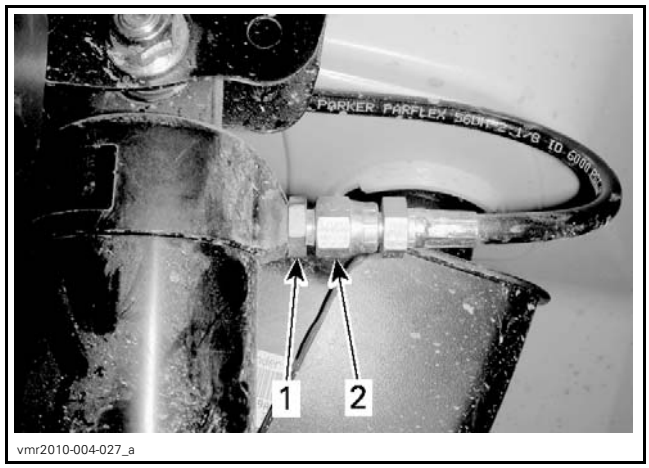

1. Shock absorber fitting
2. Air hose fitting

NOTICE **To avoid damaging the shock fitting threads, install a wrench on the shock fitting to hold it in place while unscrewing the air hose fitting.**

4. Remove the shock absorber lower bolt and nut.

www.midwestmanuals.com

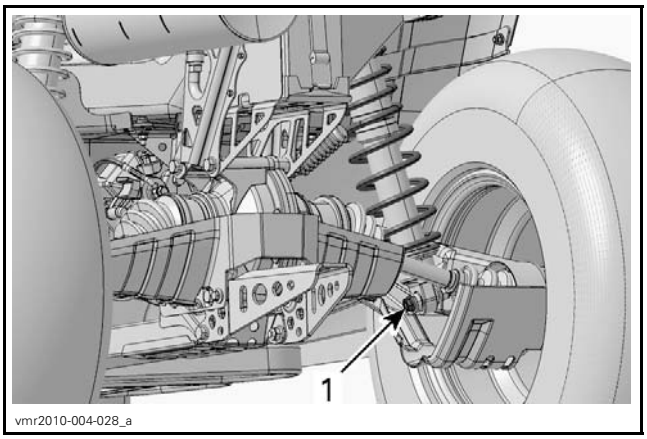

1. Shock absorber lower bolt

5. Remove the shock absorber upper bolt and nut.

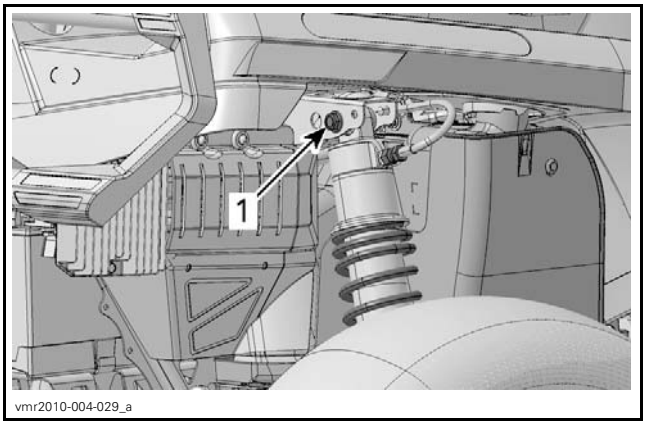

1. Shock absorber upper bolt

6. Remove shock absorber from vehicle.

Shock Absorber Disassembly

NOTICE **Be careful while manipulating or installing the shock absorber in the spring remover tool. The shock absorber body must not be scratched or damaged to avoid air leakage.**

1. Use the SPRING REMOVER (P/N 529 036 007).

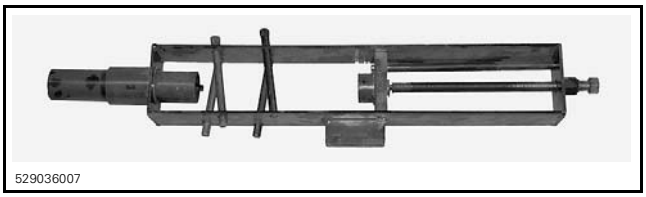

2. Place the tool in a vise.
3. Position the shock absorber in the tool and install the spring compressor pins.
4. Tighten the spring remover screw until the spring is sufficiently compressed to remove spring locking devices.
5. Remove spring stopper and its cap then loosen the spring remover screw.
6. Remove spring from shock.

Shock Absorber Inspection

Inspect the spring for damage. Replace if necessary.

Secure the end of shock body in a vise with its rod upward.

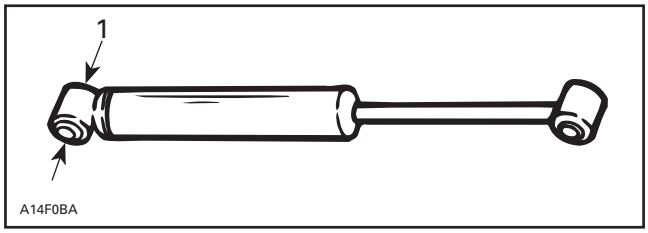

TYPICAL
1. Clamp here

NOTICE **Do not clamp directly on shock body.**

Inspect shock absorber as following:

1. Examine the shock absorber for leaks.
2. Extend and compress the shock absorber shaft several times over its entire stroke.
3. Check that the shock absorber shaft moves smoothly and with uniform resistance with its rod upward.

Any of the following conditions will denote a defective shock absorber:

– A skip or a hang back when reversing stroke at mid travel.
– Seizing or binding condition except at extreme end of either stroke.
– A gurgling noise, after completing one full compression and extension stroke.

Replace shock absorber if any faults are present.

Shock Absorber Assembly and Installation

Assembly and installation are the reverse of disassembly and removal procedures, however pay attention to the following.

Assemble shock absorber as per the following illustrations.

www.midwestmanuals.com

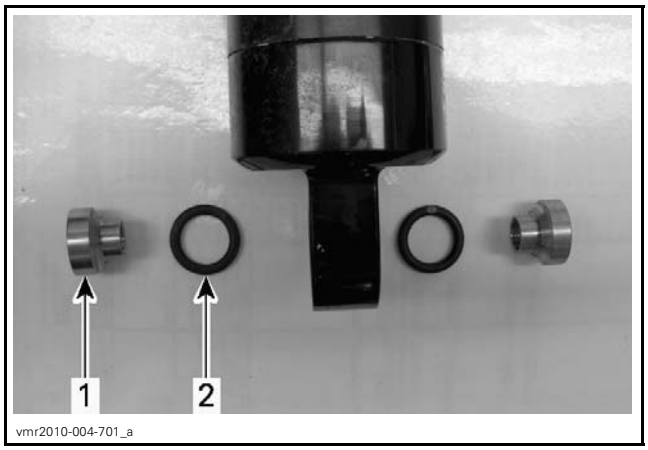

1. Sleeve
2. O-ring

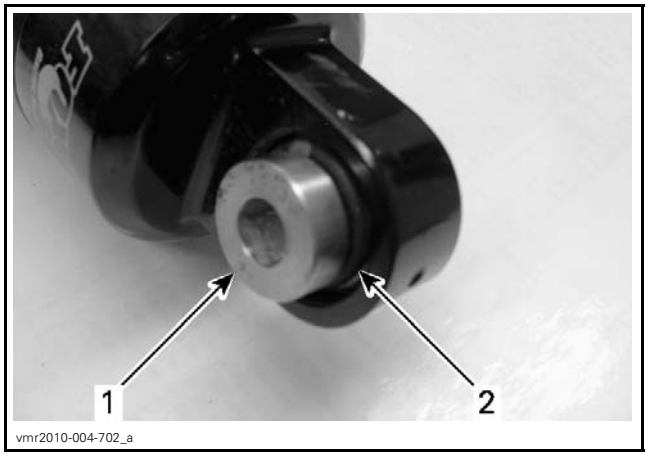

1. Sleeve
2. O-ring

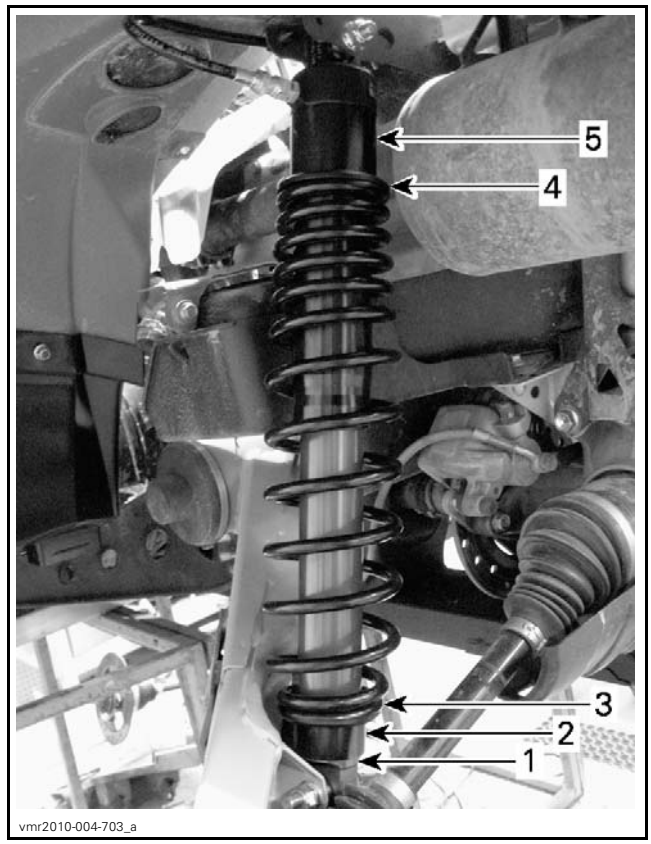

TYPICAL
1. Circlip
2. Small sleeve
3. Lower cap
4. Upper cap
5. Large sleeve

Install shock absorber cap opening at 180° from spring stopper opening.

Torque upper and lower shock absorber bolts to 53 N•m (39 lbf•ft).

If the same shock absorber is reused, apply LOCTITE 592 (PIPE SEALANT) (P/N 293 800 018) on air hose sleeve male threads.

While holding shock fitting with a wrench, tighten air hose fitting to 19 N•m (168 lbf•**in**).

www.midwestmanuals.com

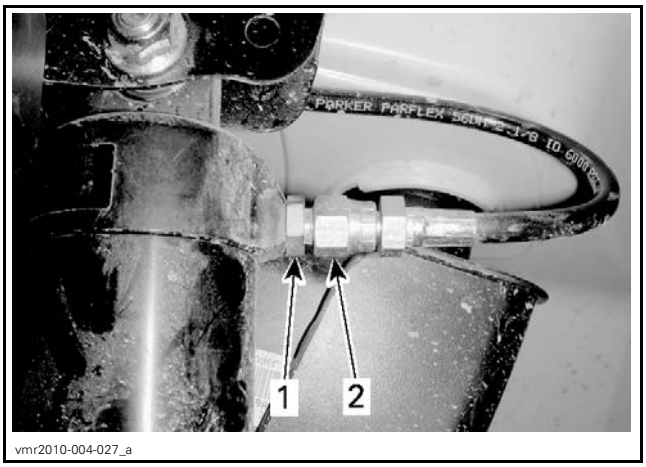

1. Shock absorber fitting
2. Air hose fitting

Ensure that there is no air leaks from shock absorber fitting and air hose. Refer to *ACS SYSTEM LEAK TEST (WITH B.U.D.S.)*.

NOTICE Never screw shock absorber air hose by using the air hose fitting only. To avoid damaging the shock fitting threads, install a wrench on the shock fitting to hold it in place while screwing the air hose fitting.

Midwest Manuals
sales@midwestmanuals.com
www.midwestmanuals.com

www.midwestmanuals.com

NOTES

NOTES